Appendix B

Circuit (Block) Diagram

ITEM	FILE NAME	DESCRIPTION
01	LINK	AMBER.SCH LINK SHEET
02	MMO.SCH	MMO CONNECTOR
03	DRAM-1.SCH	SODIMM CONNECTOR BANK 0,1
04	DRAM-2.SCH	SODIMM CONNECTOR BANK 2,3
05	CLK.SCH	CLOCK GENERATOR
06	PIIX4.SCH	PIIX4E SOUTH BRIDGE
07	RESET.SCH	TTL LOGIC IC / FAN CONNECTOR
08	USB.SCH	USB CONNECTOR
09	IIC.SCH	IIC BUS SELECTER
10	BIOS.SCH	FLASH ROM (2Mb BIOS)
11	RESISTOR.SCH	PULL UP / PULL DOWN RESISTOR
12	DEVICECN.SCH	HDD,CDROM,LS120,FDD/IF
13	RTC.SCH	RTC BATTERY
14	KB.SCH	KEYBOARD CONTROLLER
15	PS2.SCH	PS2 / GLIDE PAD / INTERNAL KB CONN
16	LEDCN.SCH	LED CONNECTOR
17	PIC.SCH	MICRO CONTROLLER (PIC 16C62-04 SSOP)
18	PICPWR.SCH	MICRO CONTROLLER POWER
19	669.SCH	SUPER I/O SMC 37N769
20	PRINT.SCH	PARALLEL PORT
21	COM.SCH	SERIAL PORT
22	N5VGA.SCH	VGA CONTROLLER - NMG5
23	N5POWER.SCH	VGA POWER
24	N5LCDCN.SCH	LCD CONNECTOR/LVDS TRANSFER
25	N5CRTCN.SCH	CRT CONNECTOR
26	11220.SCH	CARD BUS CONTROLLER (TI1220)
27	PCCARD.SCH	CARD BUS SOLT
28	ZVPORT.SCH	CARD BUS ZV PORT
29	AUDM2.SCH	AUDIO CHIP
30	GACODEC.SCH	AUDIO CODEC
31	GAMPJACK.SCH	AUDIO AMP& JACK
32	DOCKING.SCH	DOCKING CONNECTOR
33	MDLNCN.SCH	MODEM/LAN CONNECTOR
34	DC1IF.SCH	DC-DC REGULARATOR
35	DC2IF.SCH	DC-DC CONNECTOR

RESISTOR

EX: 1K X X X

1. CAPACITOR VALUE 2. SIZE 3. PERCENTAGE 4. VENDOR

2.SIZE:
A -> 0603
B -> 0805
C -> 1206
D -> 1210
E -> 1810
F -> 2010
G -> 2512
H -> 7520

3. PERCENTAGE:
A -> 0.1%
B -> 1%
C -> 5%
D -> 2%
E -> 10%

4. VENDOR:
A -> ROHM
B -> YAGEO
C -> PHILIPS
D -> AVX
E -> CYNTEC
F -> TAYIO
G -> KYO
H -> CENTRALAB

CAPACITOR

MO-CAP

EX: 7P X X X X

1. CAPACITOR VALUE 2.VOLTAGE 3.SIZE 4.PERCENTAGE 5.VENDOR

2.VOLTAGE:
A -> 10V
B -> 16V
C -> 25V
D -> 50V

2.SIZE:
A -> 0603
B -> 0805
C -> 1206
D -> 1210
E -> 1812
F -> 2321
G -> 3216
H -> 3225
I -> 5650

3. PERCENTAGE:
A -> 5%
B -> 10%
C -> 20%
D -> 80-20%
E -> 30%

4. VENDOR:
A -> AVX
B -> MURATA
C -> ROHM
D -> TAYIO
E -> MARCON
F -> MULTILATE
G -> TDK

Layout note:

		Component side
ISA	[1]	
VCC	[2]	
PCI	[3]	
CLOCK,MEMORY,LCD	[4]	
GND	[5]	
ISA	[6]	
		Solder side

IDSEL	CHIP
AD18	PIIX4(82371EB)
AD13	VGA(NM2160)
AD15	ESS(1968S)
AD17	MODEM/LAN
AD21	TI(1221)

BUSMASTER REQ	CHIP
REQ0	TI(1221)
REQ1	VGA
REQ2	AUDIO ESS
REQ3	MODEM/LAN
REQ4	
REQ5	

PCIINT	CHIP
INTA	TI(1221)
INTB	LAN /MODEM
INTC	VGA /ESS
INTD	USB

REQ	CHIP
REQA	N.C.
REQB	ESS
REQC	

DMA Channel	Device
DMA0	FIR(disable by default)(MODEM/LAN)
DMA1	ECP
DMA2	FLOPPY DISK
DMA3	AUDIO
DMA4	(Cascade)
DMA5	Unused
DMA6	Unused
DMA7	Unused

IRQ Channel	Description
IRQ0	System timer
IRQ1	Keyboard
IRQ2	(Cascade)
IRQ3	LAN/MODEM
IRQ4	Serial port
IRQ5	AUDIO/VGA/USB
IRQ6	FLOPPY DISK
IRQ7	LPT
IRQ8	RTC
IRQ9	ACPI
IRQ10	FIR(disable by default)(MODEM/LAN)
IRQ11	Cardbus
IRQ12	PS/2 mouse
IRQ13	FPU
IRQ14	HDD
IRQ15	CDROM

FCC ID: KUYDESIGNOTES6

	FIC AMBER	
Title	MAIN BOARD LINK SHEET	
Size C	Document Number AMBER.SCH (PCB VER:0.8)	REV 0.7
Date: October 14, 1999	Sheet 1 of 35	

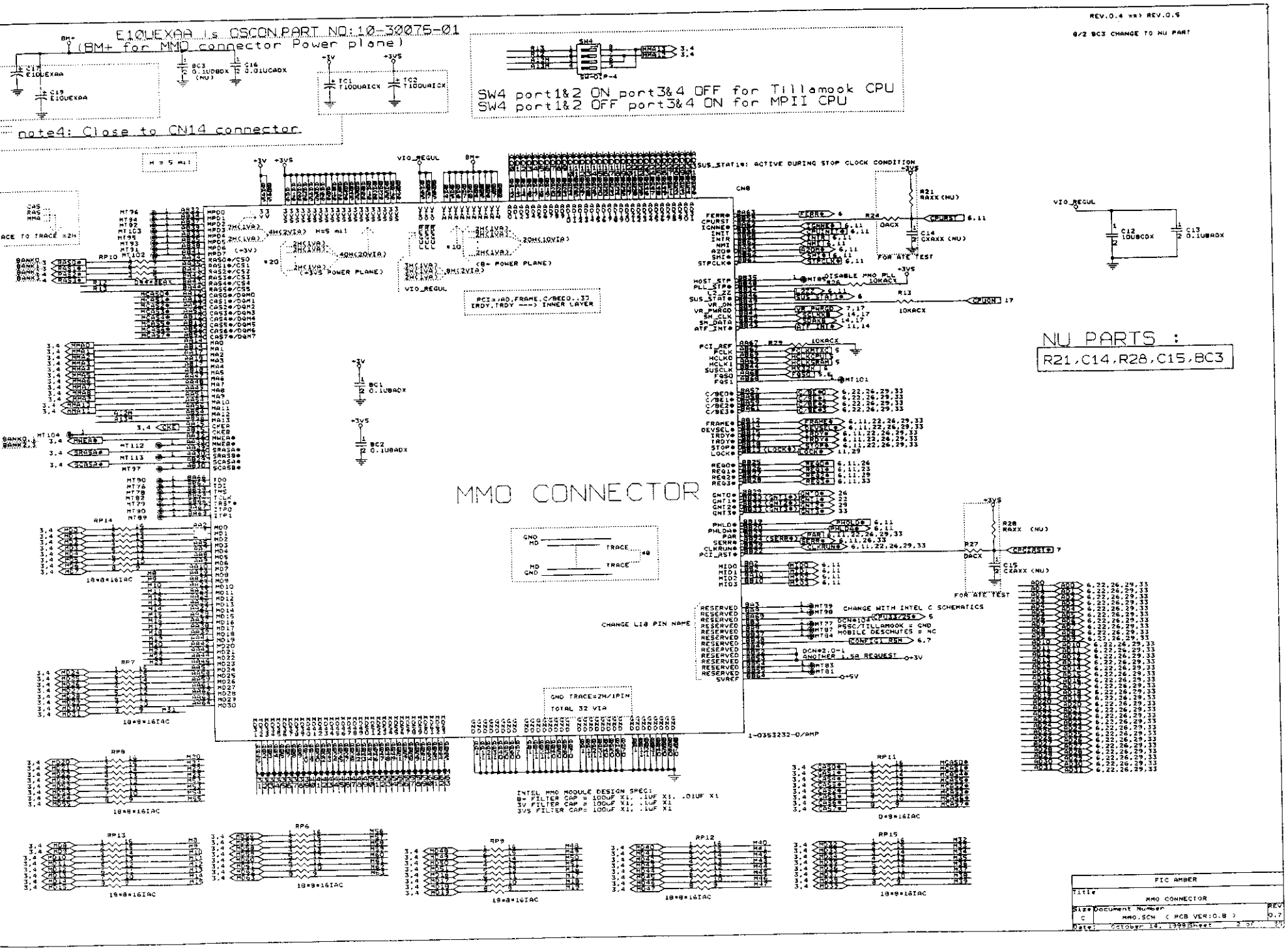
E10UEXAA is OSCON PART NO:10-30075-01
(BM+ for MMO connector Power plane)
note4: Close to CN14 connector
SW4 port1&2 ON port3&4 OFF for Tillamook CPU
SW4 port1&2 OFF port3&4 ON for MPII CPU
REV.0.4 => REV.0.5
8/2 BC3 CHANGE TO NU PART
SUS_STAT19: ACTIVE DURING STOP CLOCK CONDITION
PCI:AD,FRAME,C/BE0..3,
IRDY,TRDY ---> INNER LAYER
MMO CONNECTOR
NU PARTS :
R21,C14,R28,C15,BC3
CHANGE LI8 PIN NAME
CHANGE WITH INTEL C SCHEMATICS
GND TRACE=2M/1PIN
TOTAL 32 VIA
INTEL MMO MODULE DESIGN SPEC:
B+ FILTER CAP = 100UF X1, .1UF X1, .01UF X1
3V FILTER CAP = 100UF X1, .1UF X1
3VS FILTER CAP= 100UF X1, .1UF X1
1-0353232-0/PMP
FIC AMBER
MMO CONNECTOR
MMO.SCH (PCB VER:0.8)
October 14, 1998

FCC ID: EHNDESIGNOTE56

CPU Module
MMC1-MPII-233
-266
-300
} 66 MHZ

Note: BIOS need through SM BUS program
IC WORKS pin39 ,pin38, pin30, pin29, pin23 ,pin16 output clock disable

	Rated current	DC resistance	size
BLM11P10	0.5A	0.2	1.6x0.8

CLOCK GENERATOR CAP

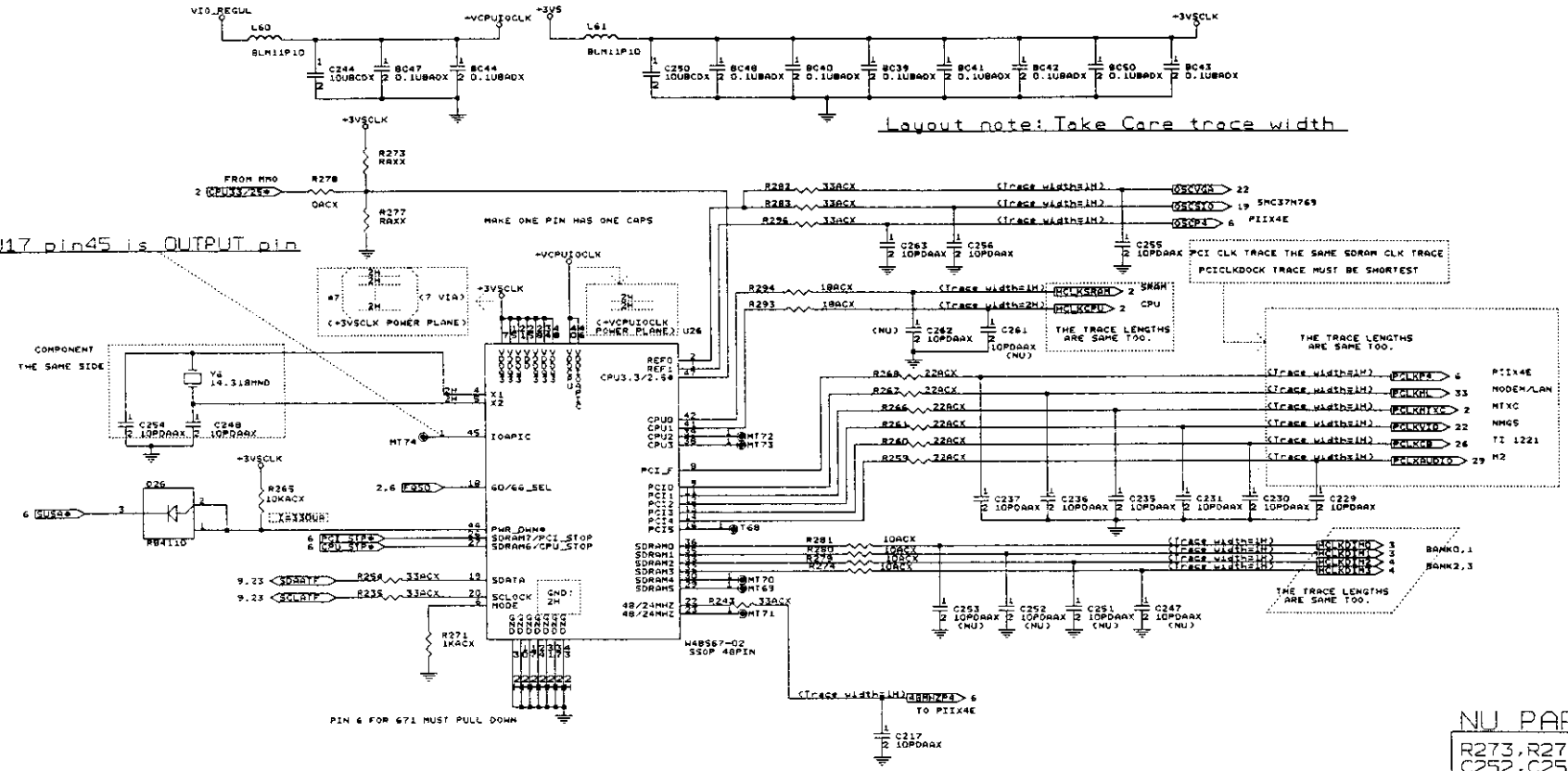

NU PARTS :
R273,R277,C262,C261,C253
C252,C251,C247

R278 CANCEL FOR IMI XG571

Title	FIC AMBER
	CLOCK GENERATOR
Size	Document Number
C	CLK.SCH (PCB VER:0.8)
	REV 0.7

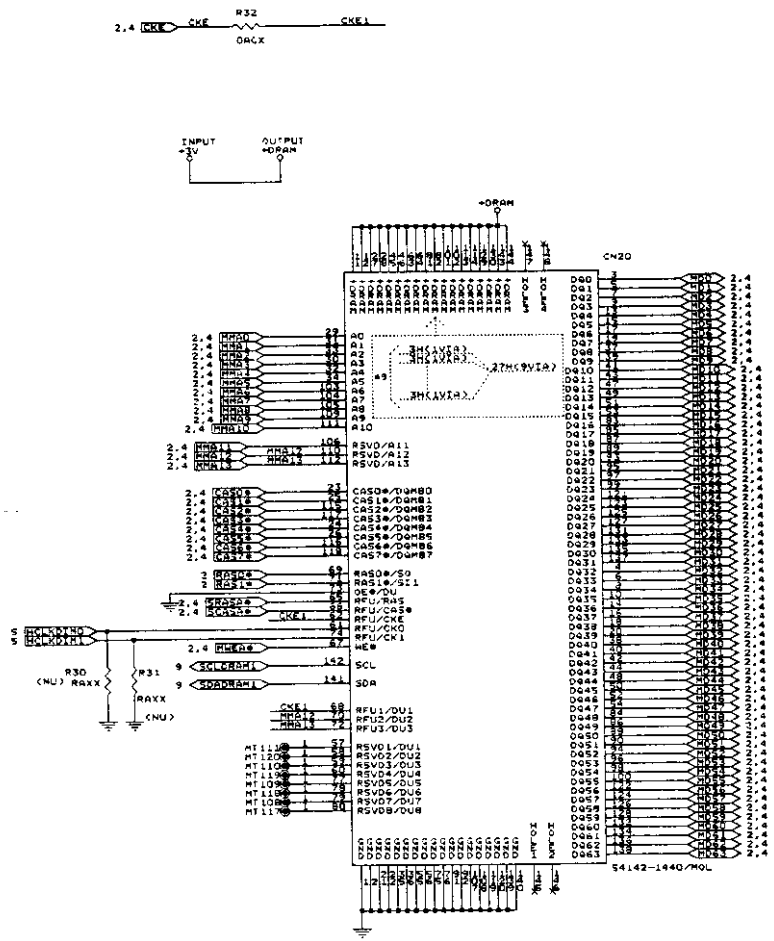

BANKS Ø/1

BANK Ø/1

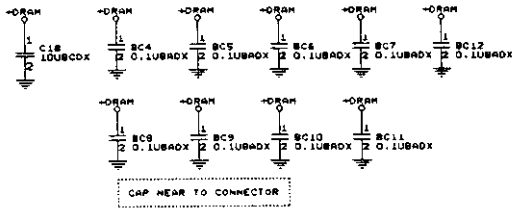

NU PARTS :

R30,R31

Title	FIC AMBER
	SODIMM144
Size C	Document Number DRAM-1.SCH (PCB VER:0.8)
Date: October 14, 1998 Sheet 3 of 9	REV 0.7

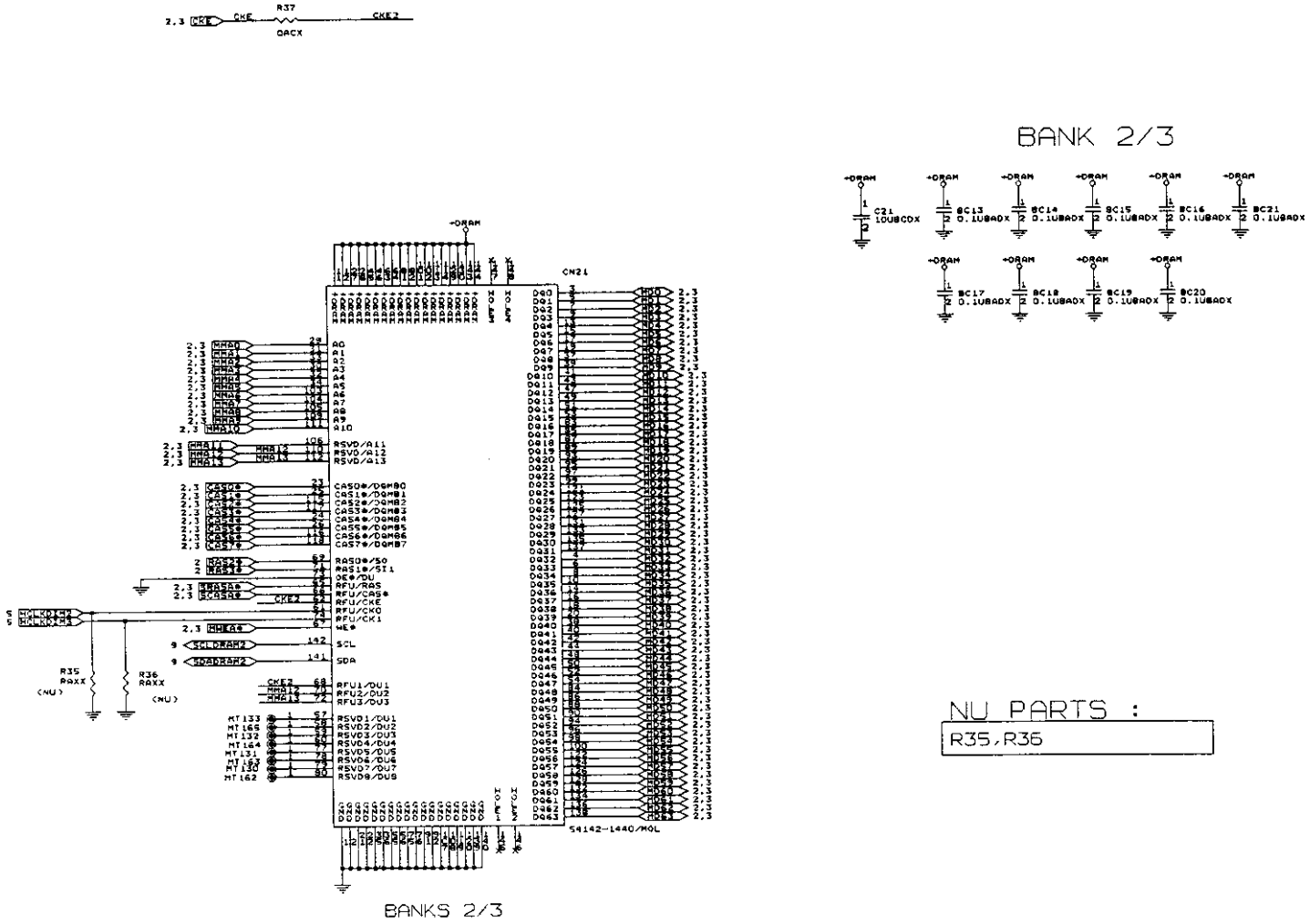

Title	FIC AMBER
	SODIMM144
Size C	Document Number DRAM-2.SCH (PC8 VER:0.8)
REV	0.7
Date:	October 14, 1998 Sheet 4 of 7

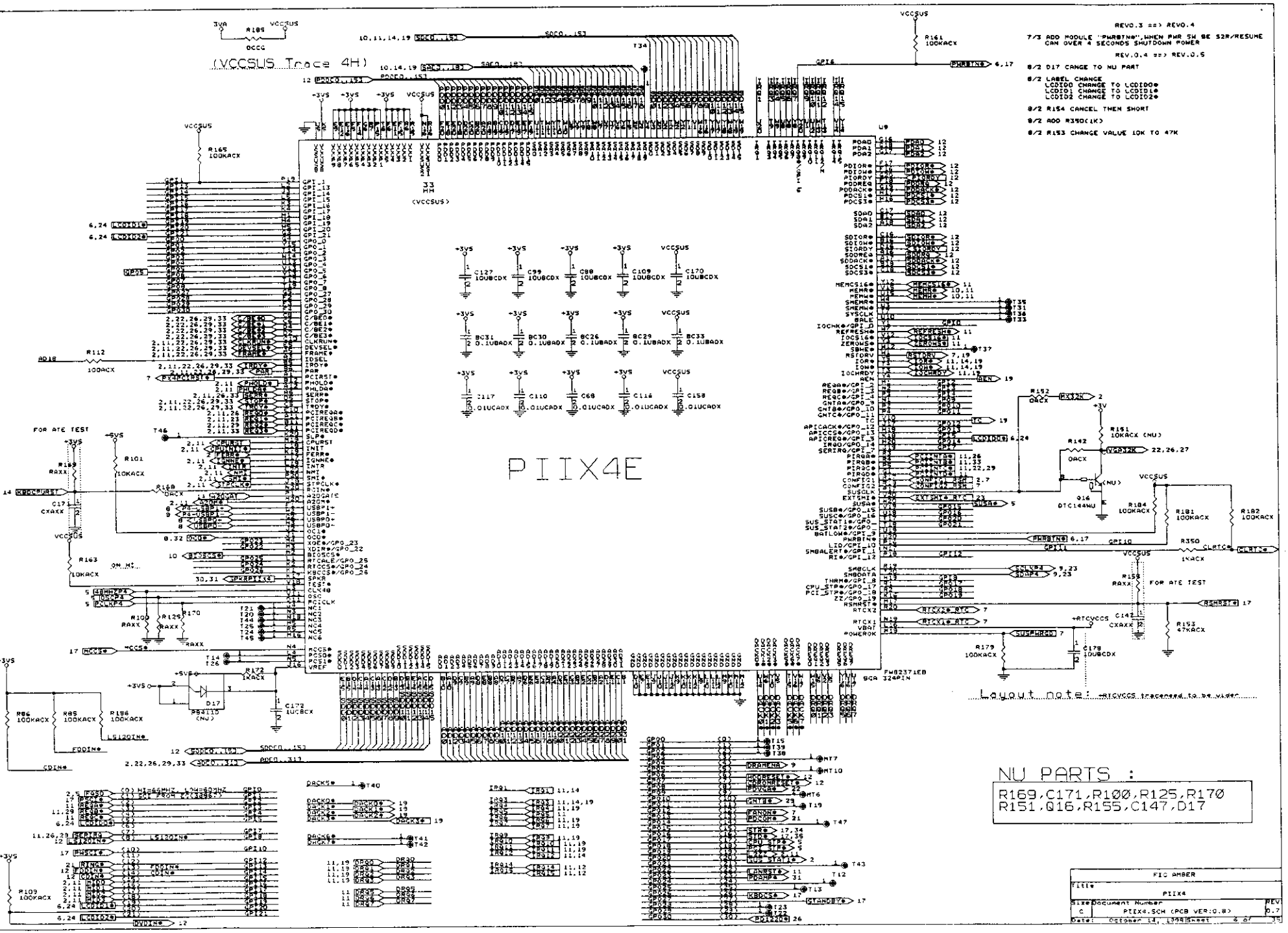
(VCCSUS Trace 4H)
PIIX4E
REV0.3 ==> REV0.4
7/3 ADD MODULE "PWRBTN#",WHEN PWR SW BE S2R/RESUME CAN OVER 4 SECONDS SHUTDOWN POWER
REV.0.4 ==> REV.0.5
8/2 D17 CANGE TO NU PART
8/2 LABEL CHANGE
LCDID0 CHANGE TO LCDID0#
LCDID1 CHANGE TO LCDID1#
LCDID2 CHANGE TO LCDID2#
8/2 R154 CANCEL THEN SHORT
8/2 ADD R350(1K)
8/2 R153 CHANGE VALUE 10K TO 47K
FOR ATE TEST
Layout note: +RTCVCCS traceway to be wider.
NU PARTS :
R169,C171,R100,R125,R170
R151,Q16,R155,C147,D17
FIC AMBER
PIIX4
PIIX4.SCH (PCB VER:0.8)
October 14, 1998

REV. 0.1 ==> REV. 0.2 MODIFICATION
6/1 Y3 CHANGE TYPE THEN CANCEL MT15,MT14

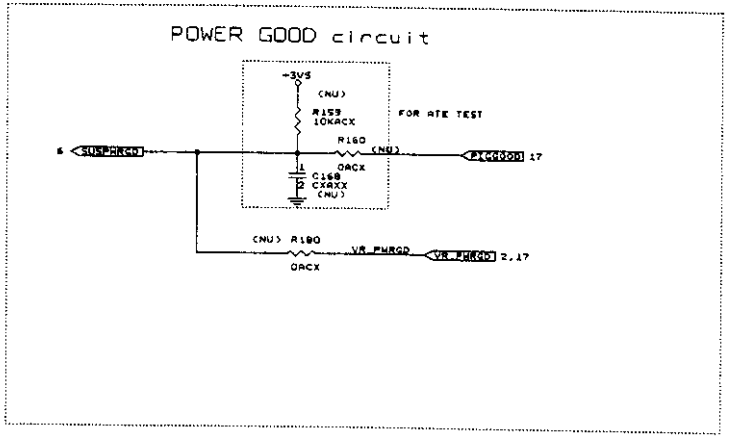

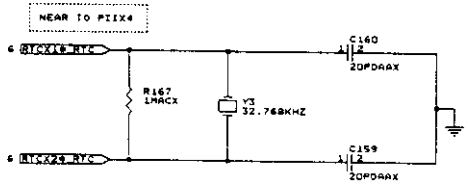

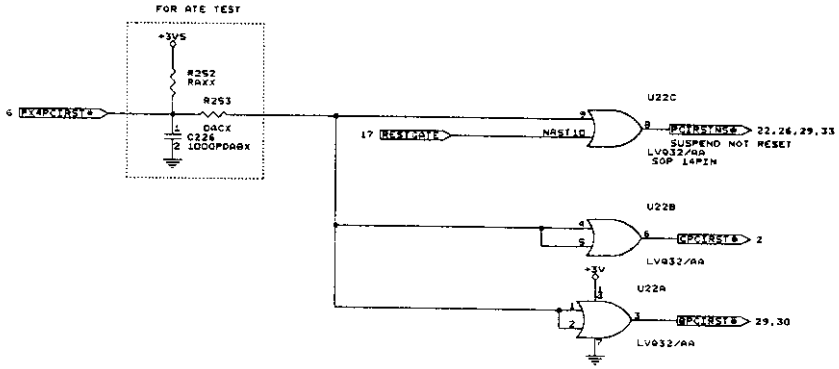

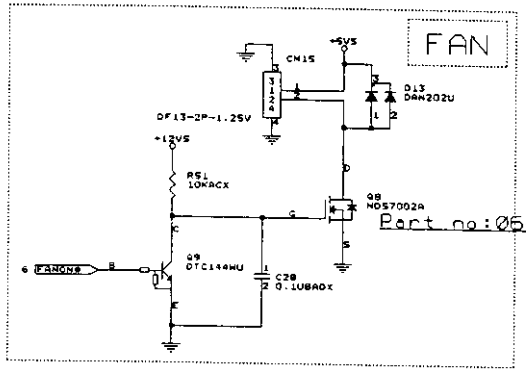

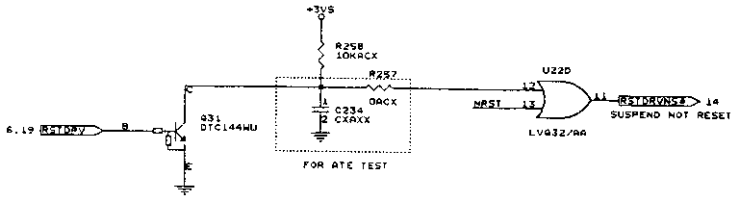

CONFIG1:LOW SETS PIIX4
TO RUN A PENTIUM PROCESSOR

CONFIG2:LOW SETS PIIX4
TO RUN IN MOBILE MODE

CONFIGC1:23=HIGH SET PIIX4
TO RUN THE PENTIUM PRO
AND IN DESKTOP MODE.

RESPECTIVELY

VCC5US

2,6 CONFIG1_RSM R149 1MACX

6 CONFIG2_RSM R171 100KACX

CONFIG1 = LO PENTIUM PROCESSOR
CONFIG1 = HI MMO, PENTIUM PRO
CONFIG2 = LOW PIIX4 IN MOBILE MODE

NU PARTS :

R252,C234,R159,C168
R180

Title	FIC AMBER
	PIIX4 CONTROL LOGIC
Size C	Document Number RESET.SCH (PCB VER:0.8)
REV	0.7
Date:	October 14, 1998 Sheet 7 of 35

	Rated current	DC resistance	Size
BLM41P02	3A	0.03	4.5x1.6
BLM11A05	0.2A	0.2	1.6x0.8

USB

USB power trace as WIDE as possible

CLOSE USB CONNECTOR

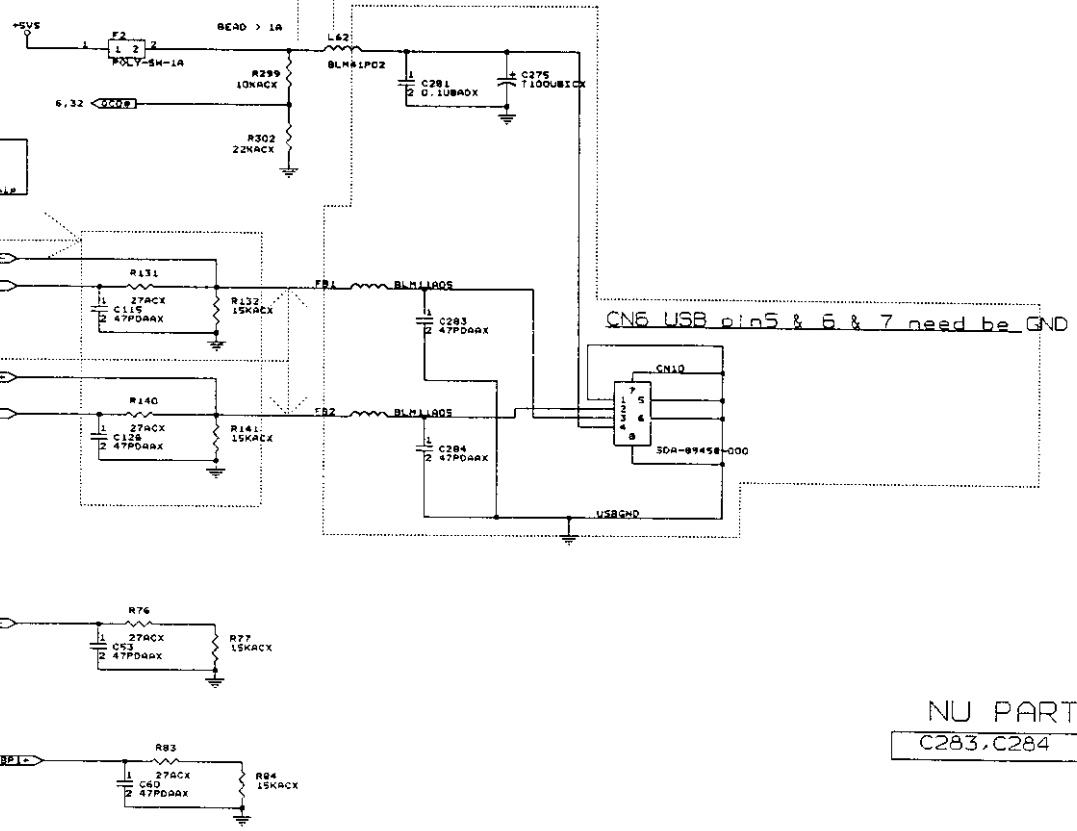

Layout note:

This area resistor & capacitor need close to PIIX4E chip

Layout note: Same legth

USBP0-

USBP0+

CN6 USB pin5 & 6 & 7 need be GND

NU PARTS :

C283,C284

Title	FIC AMBER		
	USB		
Size C	Document Number USB.SCH (PCB VER:0.8)		REV 0.7
Date: October 14, 1998	Sheet 9 of 35		

IIC PULL UP

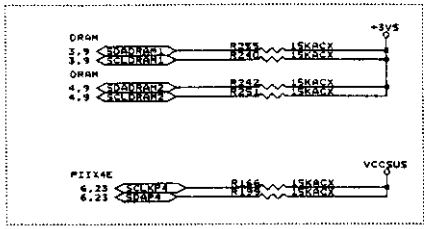

NU PARTS :

R255,R240,R242,R251

Read SDRAM-2 slot EPPROM need program DRAMENA:H
Read SDRAM-1 slot EPPROM need program DRAMENA:L

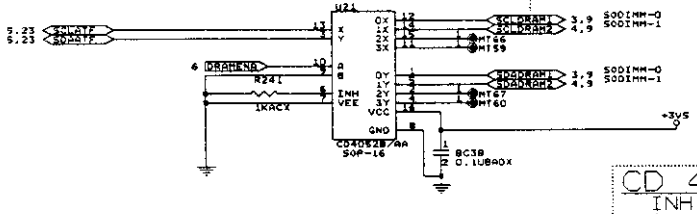

CD 4052 True table

INH	A	B	
0	0	0	0X,0Y
0	1	0	1X,1Y
0	0	1	2X,2Y
0	1	1	3X,3Y
1	–	–	– ,–

Title	FIC AMBER	
	IIC	
Size C	Document Number IIC.SCH (PCB VER:0.8)	REV 0.7
Date: October 14, 1999	Sheet 9 of 10	

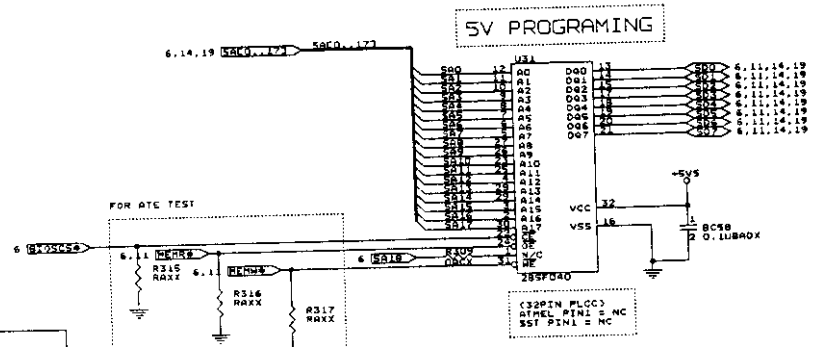

NU PARTS :

R315,R316,R317

NOET: BIOS Scoket 1002-B32T1R

FIC AMBER		
Title	BIOS	
Size C	Document Number BIOS.SCH (PCB VER:0.9)	REV 0.7
Date: October 14, 1998	Sheet 13 of 16	

REV0.2 --> REV0.3

6/17 RP4,RP5 CHANGE PARTS
THEN ADD TEST POINT

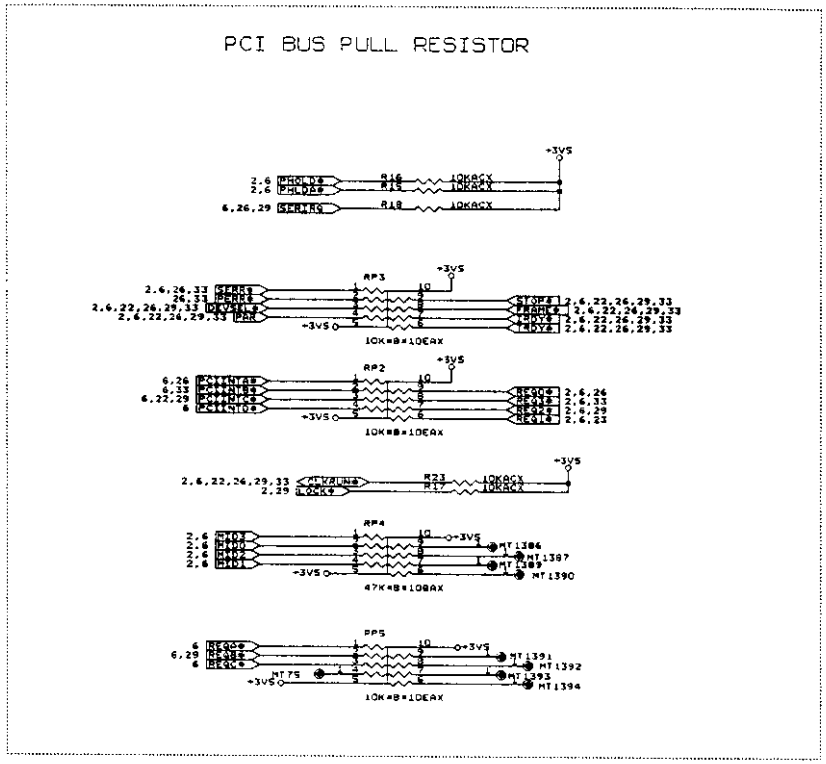

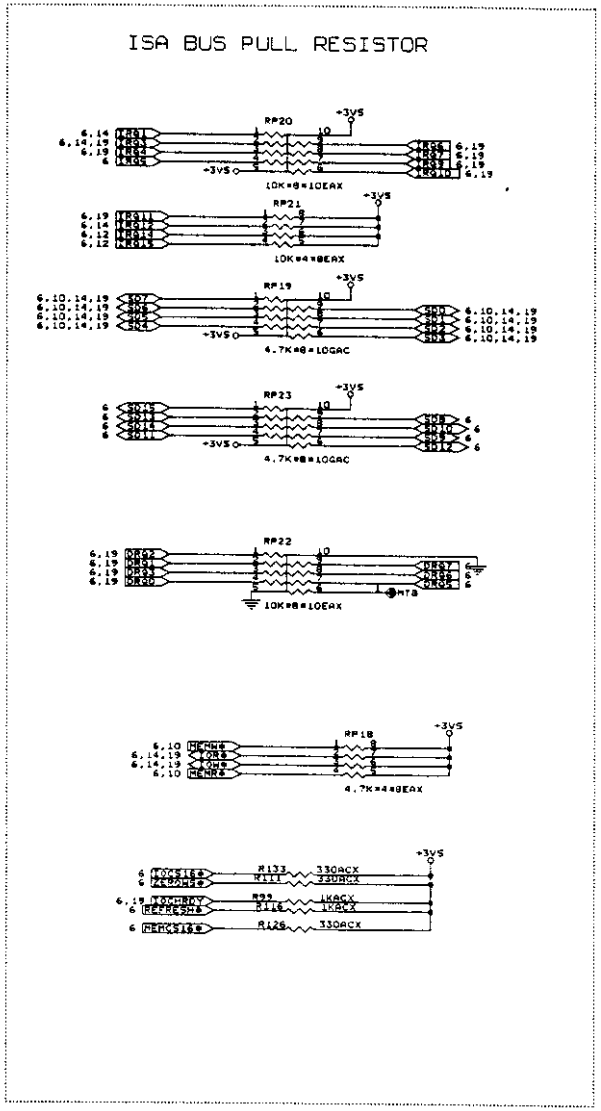

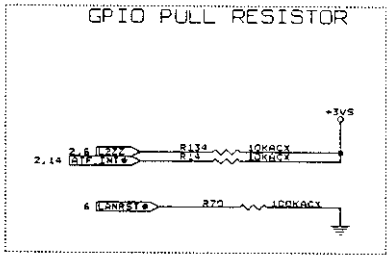

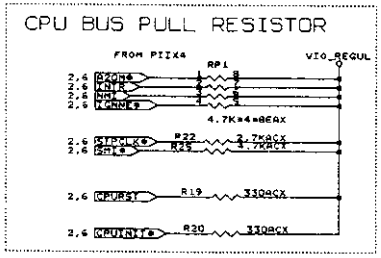

Title	FIC AMBER
	PULL UP/DOWN RESISTOR
Size C	Document Number RESISTOR.SCH (PCB VER:0.8)
	REV 0.7
Date: October 14, 1998	Sheet 11 of 35

REV0.3 ==> REV0.4

7/3 CN5(89) CANCEL T70 THEN CHANGE TO IDA#

REV0.6 ==> REV0.7

9/11 CN5 PIN90 ADD MODULE "RE-CHARG"

HDD connector

HDD max 1.5A
connector pin max 0.3A

POWER
HDD MAX 1.5A
LS-120 MAX 2A
CDROM MAX 1.5A
CONNECTOR 1PIN 0.5A

FDD connector

FDD max 0.75A
connector max 1A

DEVICE connector circuit to I/O Board

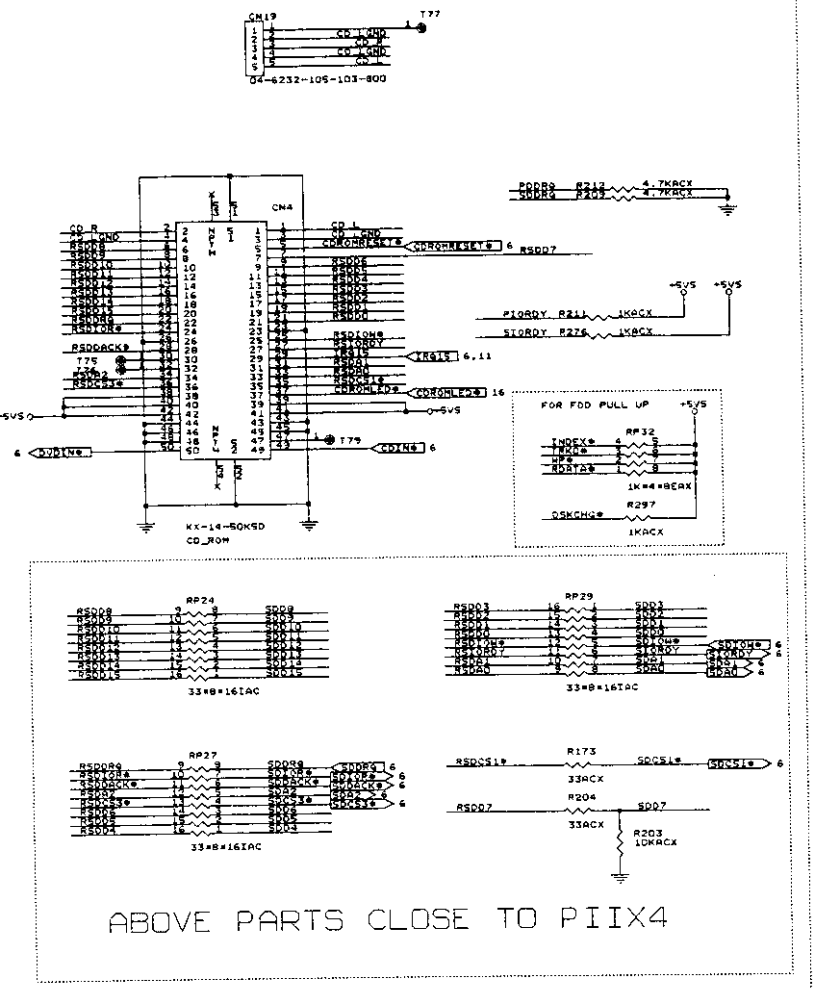

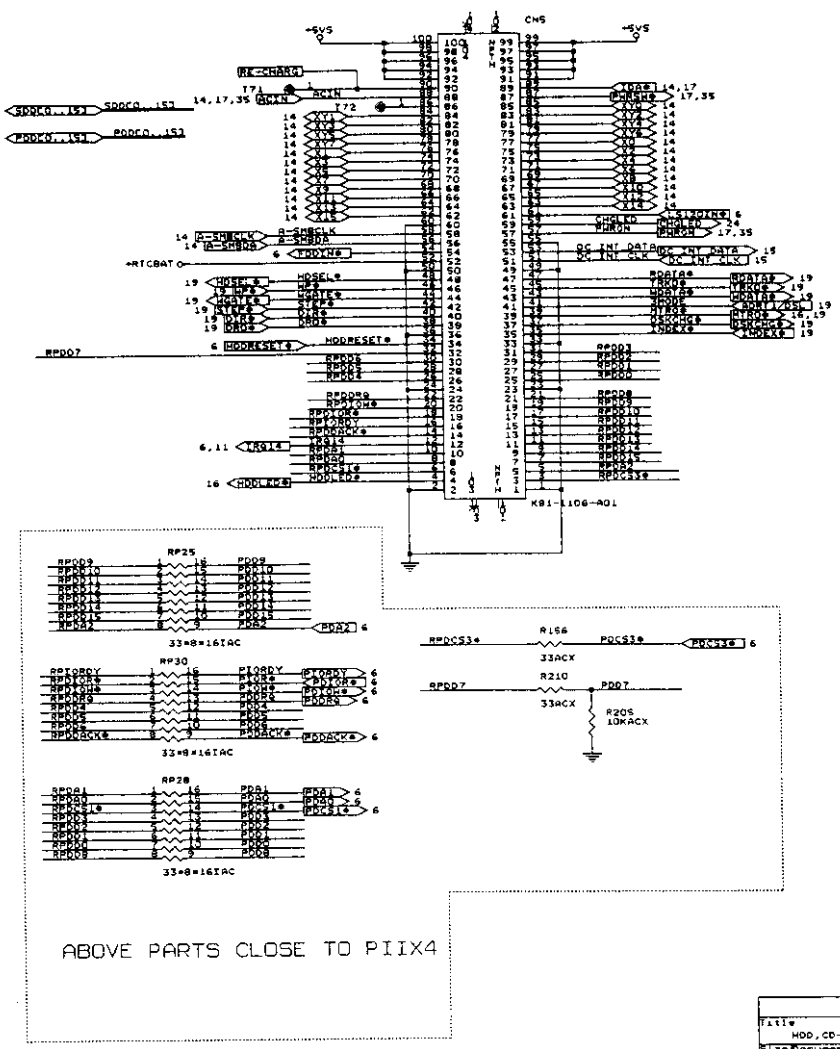

FIC AMBER		
Title: HDD,CD-ROM,FDD,K/B,GLIDE PAD,RTC/IF		
Size: C	Document Number: DEVICECN.SCH (PCB VER:0.8)	REV: 0.7
Date: October 14, 1998	Sheet 12 of 35	

REV.0.4 => REV.0.5
8/2 ADD R347(0) THEN CONNECT TO +RTCVCCS

RTC discharge circuit

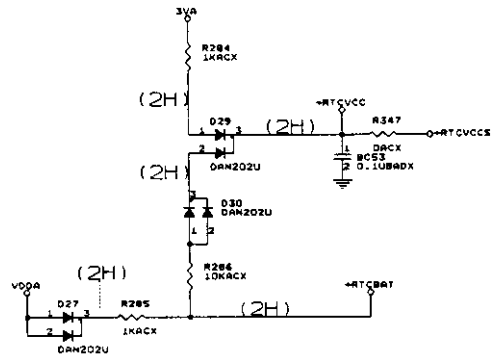

Under AC Adapter		
Power ON	Suspend	Power Off
Charge	Charge	Charge

Under Battery		
Power ON	Suspend	Power Off
Charge	Charge	Charge

FIC AMBER		
Title	RTC	
Size C	Document Number RTC.SCH (PCB VER:0.8)	REV 0.7
Date: October 14, 1998	Sheet 13 of 33	

M38867 firmware REV: after 1.29

REV. 0.1 ==> REV. 0.2 MODIFICATION

5/28 U23 PIN79 R270 10K CHANGE TO 47K
CONNECT FROM +5V TO GND
THEN ADD MODULE WAKEUP# TO PIC PIN16

5/28 U23 PIN74 T74 CANCEL
CHANGE TO MODULE L/M_RST#

6/1 Y5 CHANGE TYPE THEN CANCEL MT48,MT47

REV0.2 --> REV0.3

6/17 U23 PIN20,21 PULL-UP 10K TO +5V

6/17 U23 PIN75 ADD 0.01UF TO GND

REV0.3 ==> REV0.4

7/3 R339,R338 PULL UP TO +5VS

REV.0.4 ==> REV.0.5

8/2 MODIFY RTC CLEAN FUNCTION
SW3(5) CHANGE TO GND
SW3(4) ADD TWO PATH AND RESISTOR(R348,R349)
THEN R348 IS NU PART

8/2 U23(12) ADD DIODE(DAN202U)

8/2 U23(38) ADD MODULE(VOLDNN)

8/2 U23(26) ADD R387,R388

8/2 U23(19) ADD R389,R390

REV.0.6 ==> REV.0.7

9/11 U23 PIN36 ADD MODULE "RE-CHARG"

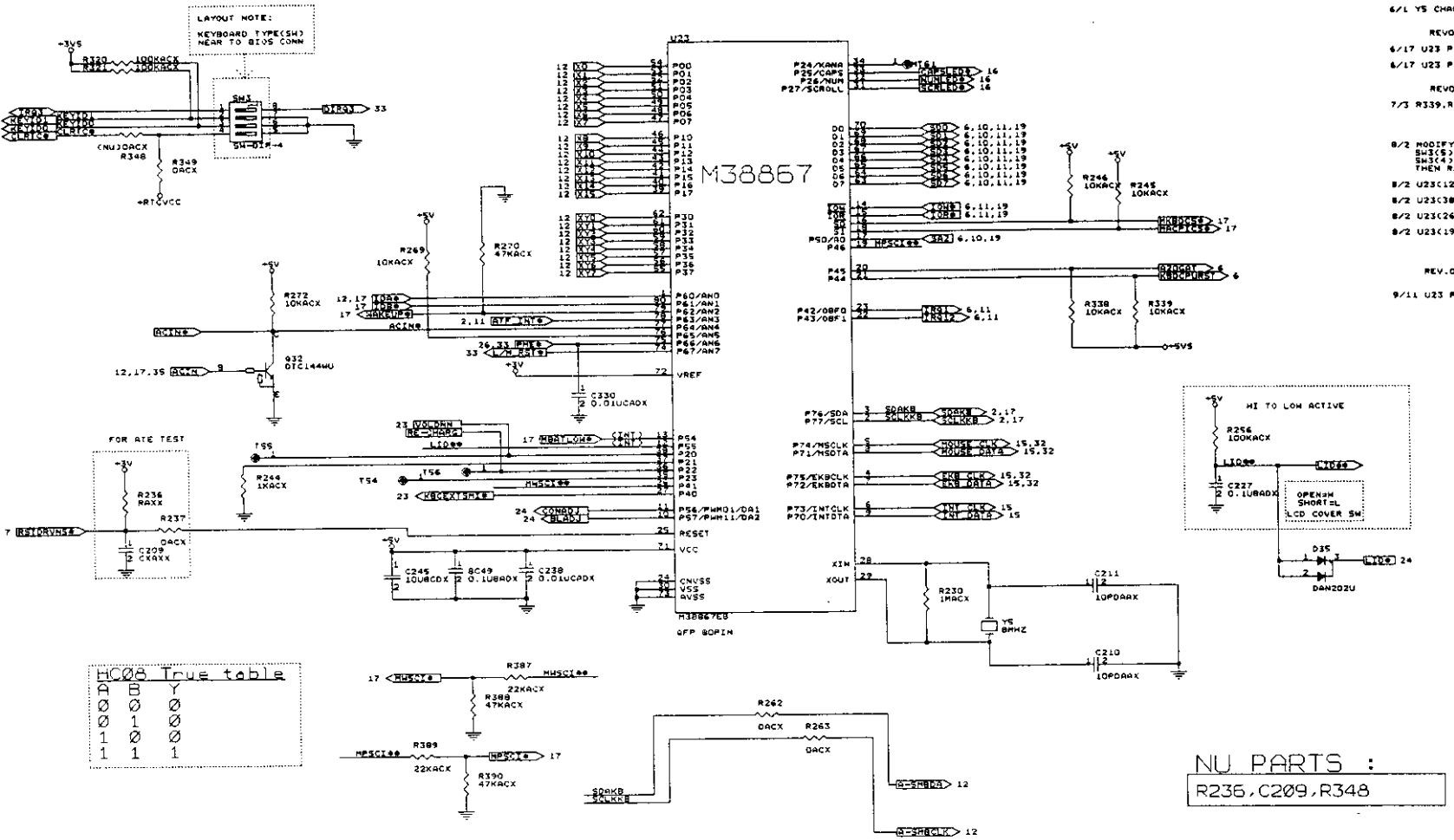

HC08 True table

A	B	Y
0	0	0
0	1	0
1	0	0
1	1	1

NU PARTS :

R236,C209,R348

Title:	PIC AMBER KEYBOARD CONTROLLER	
Size: C	Document Number: KB.SCH (PCB VER:0.8)	REV: 0.7
Date: October 18, 1999	Sheet 14 of 30	

Glide Pad TM41PDG-220-2 Synaptics

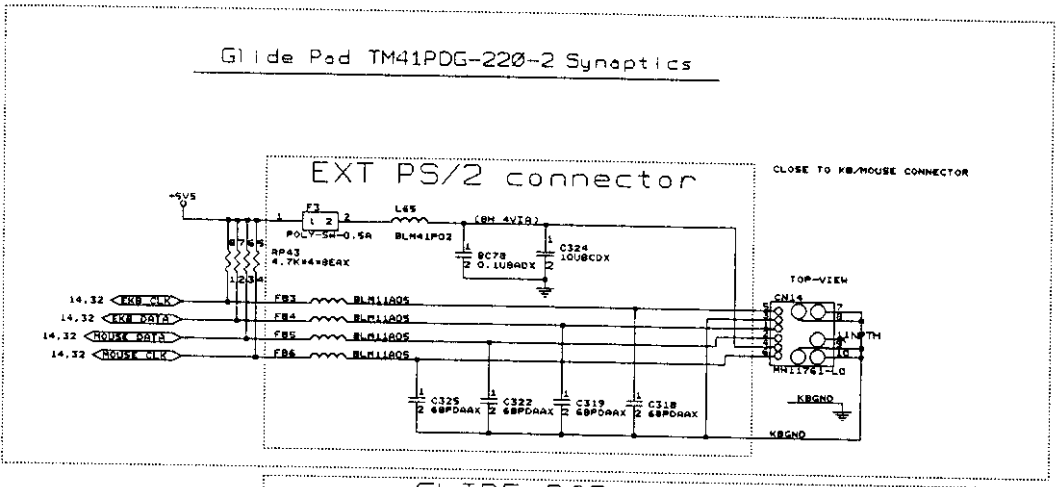

GLIDE PAD pull resistor

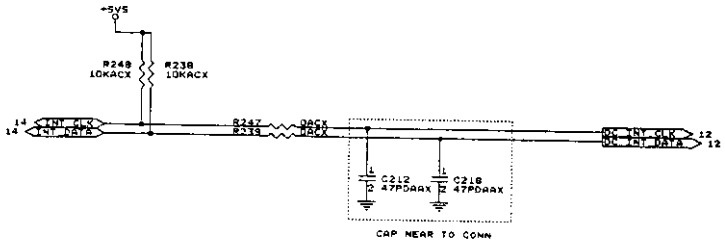

Title:	FIC AMBER
	PS2 / GLIDE PAD / INT KB CONN
Size: C	Document Number: PS2.SCH (PCB VER:0.8)
REV: 0.7	
Date: October 14, 1998	Sheet 15 of 36

REV.0.4 ==> REV.0.5
8/2 CUT D3(1) TRACE

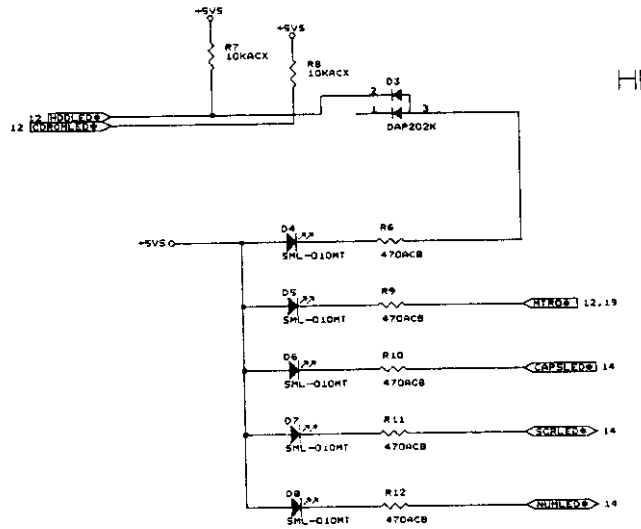

LED STATUS

HDD&CDROM FDD Caps Scr Num

	FIC AMBER
Title	LED BOARD CONNECTOR
Size C	Document Number LEDCN.SCH (PCB VER:0.8) REV 0.7
Date: October 14, 1998	Sheet 16 of 35

REV. 0.1 ==> REV. 0.2 MODIFICATION

5/28 U15 PIN2 LANCTL CHANGE TO LANCTL#

5/28 U15 PIN16 CONNECT FROM U23 M38867 MODULE WAKEUP# AND R178 CANCEL

5/28 U15 PIN17 CONNECT FROM MDM/LAN CONNECTOR MODULE L/M#_TYPE AND R198 CONNECT FROM VDDA TO +5V

6/1 Y4 CHANGE TYPE THEN CANCEL MT18,MT13

REV0.2 ==> REV0.3

6/17 SW1 PIN1,3 NOT SHORT PIN2 NC

REV0.3 ==> REV0.4

7/3 R221 PULL UP TO +5V THE CONNECT TO CN5(89)

REV.0.4 ==> REV.0.5

8/2 SCLKKB,SDAKB ADD R353,R354 TO VDDA THEN R353,R354 IS NU PARTS

8/2 CUT U13(2,3) TRACE THEN ADD R386
CUT U13(9,8) TRACE
CUT U13(19,18) TRACE

8/2 U15(23) ADD R351 TO +5V AND ADD MODULE R82

PIC16C62A signal timing

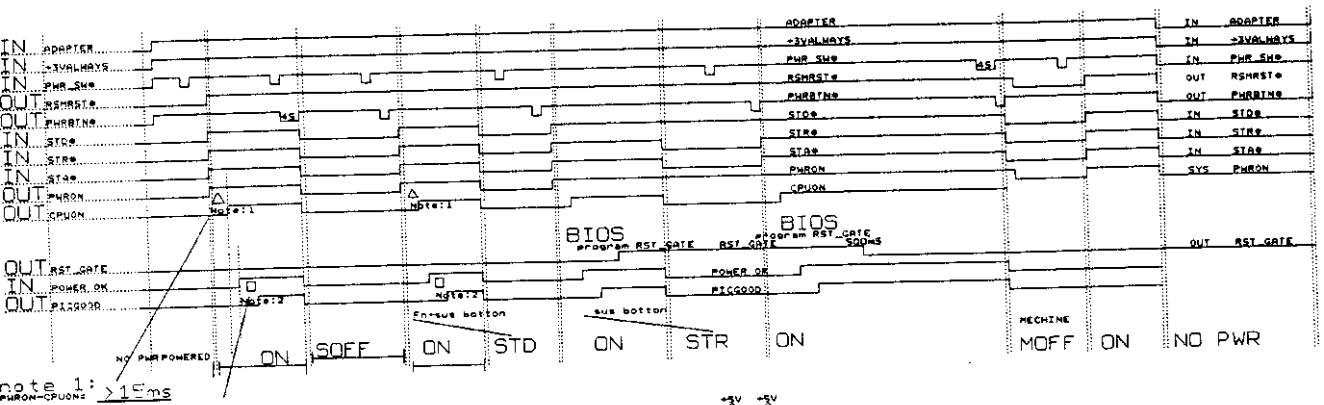

note 1: PWRON-CPUON= >15ms

Note 2: POWER OK-PIC9900>= 200ms

3V transfer 5v

Include DIODE

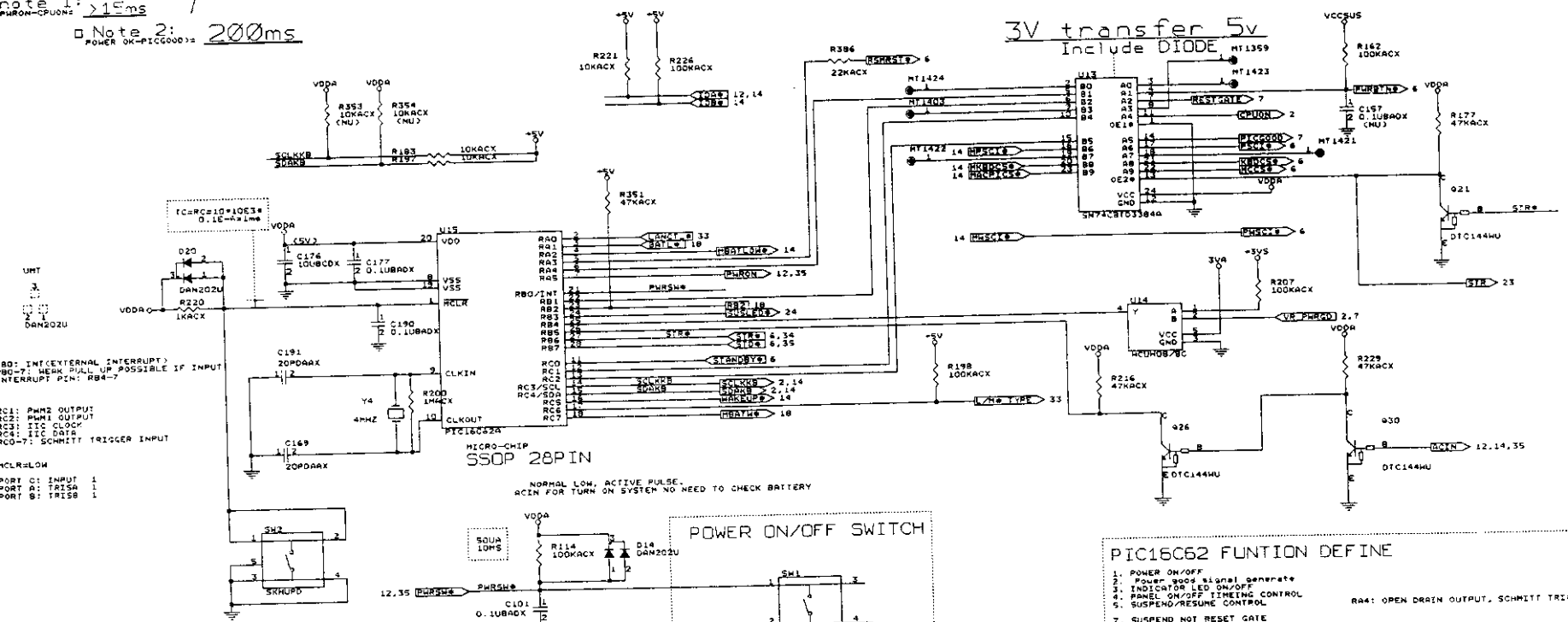

B0: INT(EXTERNAL INTERRUPT)
B0-7: WEAK PULL UP POSSIBLE IF INPUT
INTERRUPT PIN: RB4-7

RC1: PWM2 OUTPUT
RC2: PWM1 OUTPUT
RC3: IIC CLOCK
RC4: IIC DATA
RC0-7: SCHMITT TRIGGER INPUT

MCLR=LOW

PORT C: INPUT 1
PORT A: TRISA 1
PORT B: TRISB 1

PIC 16C72

PIC16C72 IIC ADDRESS 04

38813 IIC BUS TO SMART BATTERY

OTHER IIC BUS TIPE TO PIIX4

AFTER BOOT SAVE SUSPEND TO RAM POWER COMSUMPTION AND CACULATER STR TO STD TIME THEN SET SAVE TO DISK TIMER

SUB-BATTERY DESIGN GUIDE
1.6 X 20mA X 10/60 = I X 3hr
1.6: 1.6A
20mA: POWER COMSUMPTION DURING SUSPEND
10/60: SUB BATTERY WORKING FOR 10min
I: CHARGE SUB-BATTERY CURRENT
3hr: MAIN BATTERY FOR SYSTEM WORKING LIFE

PIC16C62 FUNTION DEFINE

1. POWER ON/OFF
2. Power good signal generate
3. INDICATOR LED ON/OFF
4. PANEL ON/OFF TIMEING CONTROL
5. SUSPEND/RESUME CONTROL

7. SUSPEND NOT RESET GATE
8. BATTERY GAS GAUGE

RA4: OPEN DRAIN OUTPUT, SCHMITT TRIGGER INPUT

NU PARTS:

R353,R354

FIC AMBER		
Title: MICRO PROCESSER		
Size: C	Document Number: PIC.SCH (PCB VER:0.8)	REV: 0.7
Date: October 14, 1998	Sheet 17 of 35	

REV0.3 ==> REV0.4
7/3 U16 CHANGE PART TO LP2951

REV.0.4 ==> REV.0.5
8/2 D24 CHANGE TO NU PART
8/2 D23 PART CHANGE TO RB411D
8/2 Q40(B,E) ADD R355
8/2 U16(5) ADD MODULE RB2
8/2 U16(3) CONNECT TO Q40(C)

REV.0.6 ==> REV.0.7
9/11 R355 10K CHANGE TO 15K

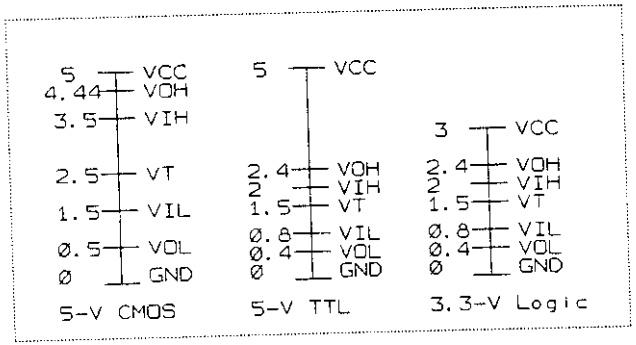

RB411D	
Forward volyage	VF1=0.24V/0.3V(IF=10mA)

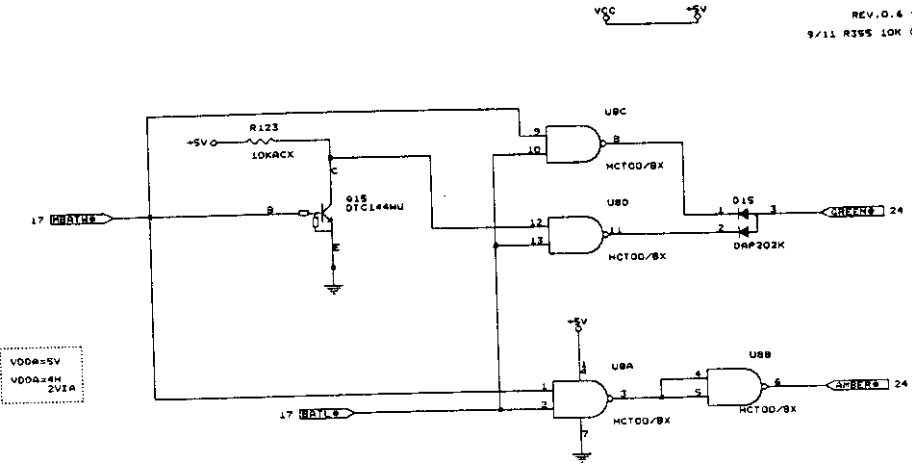

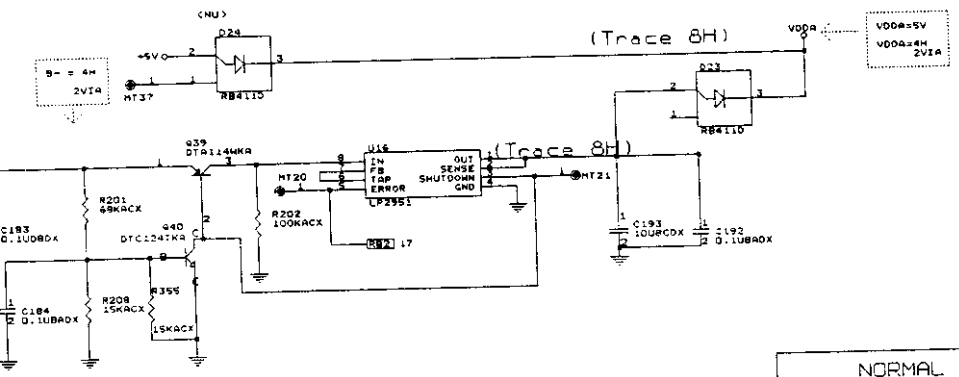

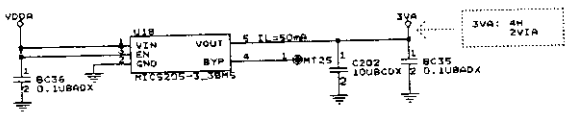

NU PARTS:

D24

POWER STATUS LED TRUTH TABLE :

	UNDER AC		GREEN#	AMBER#
	MBATW#	BATL#		
NORMAL	1	1	0	1
BATTERY WARNING (8% OR LESS)	1	1	0	1
BATTERY LOW (3% OR LESS)	1	1	0	1

	UNDER AC		GREEN#	AMBER#
	MBATW#	BATL#		
NORMAL	1	1	0	1
BATTERY WARNING (8% OR LESS)	0	1	0	0
BATTERY LOW (3% OR LESS)	1	0	1	0

Title	PIC AMBER
	PIC POWER
Size C	Document Number PICPWR.SCH (PCB VER:0.8)
	REV 0.7
Date:	October 14, 1998 Sheet 10 of 26

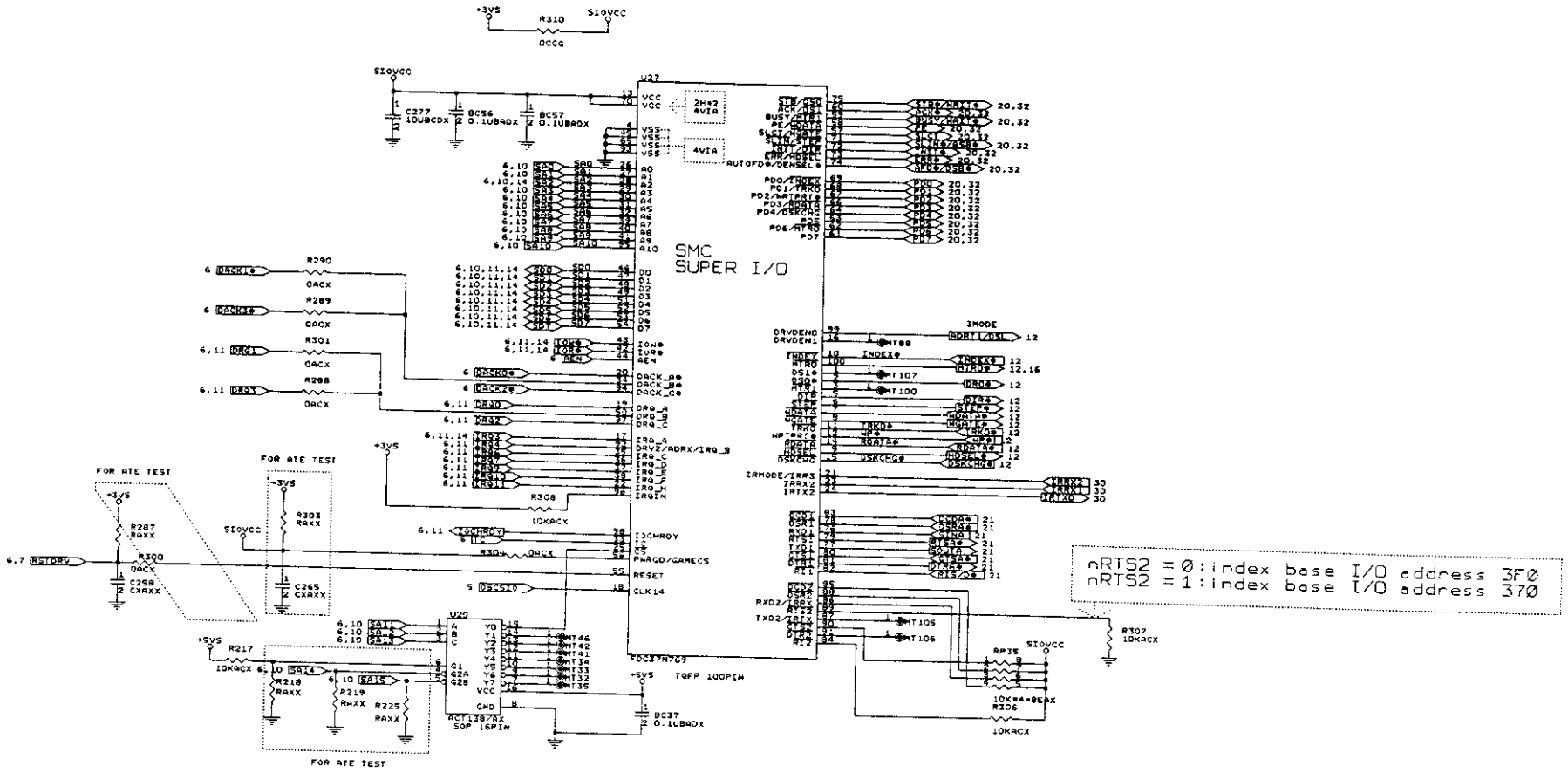

NU PARTS :

R289,R288,R287,C258,R303,C265
R218,R219,R225

Title	FIC AMBER
	SUPER I/O SMC37C669FRLV
Size C	Document Number 669.SCH (PCB VER:0.8)
REV	0.7
Date: October 13, 1998	Sheet 10 of 30

PRINT PORT
STANDARD CIRCUIT

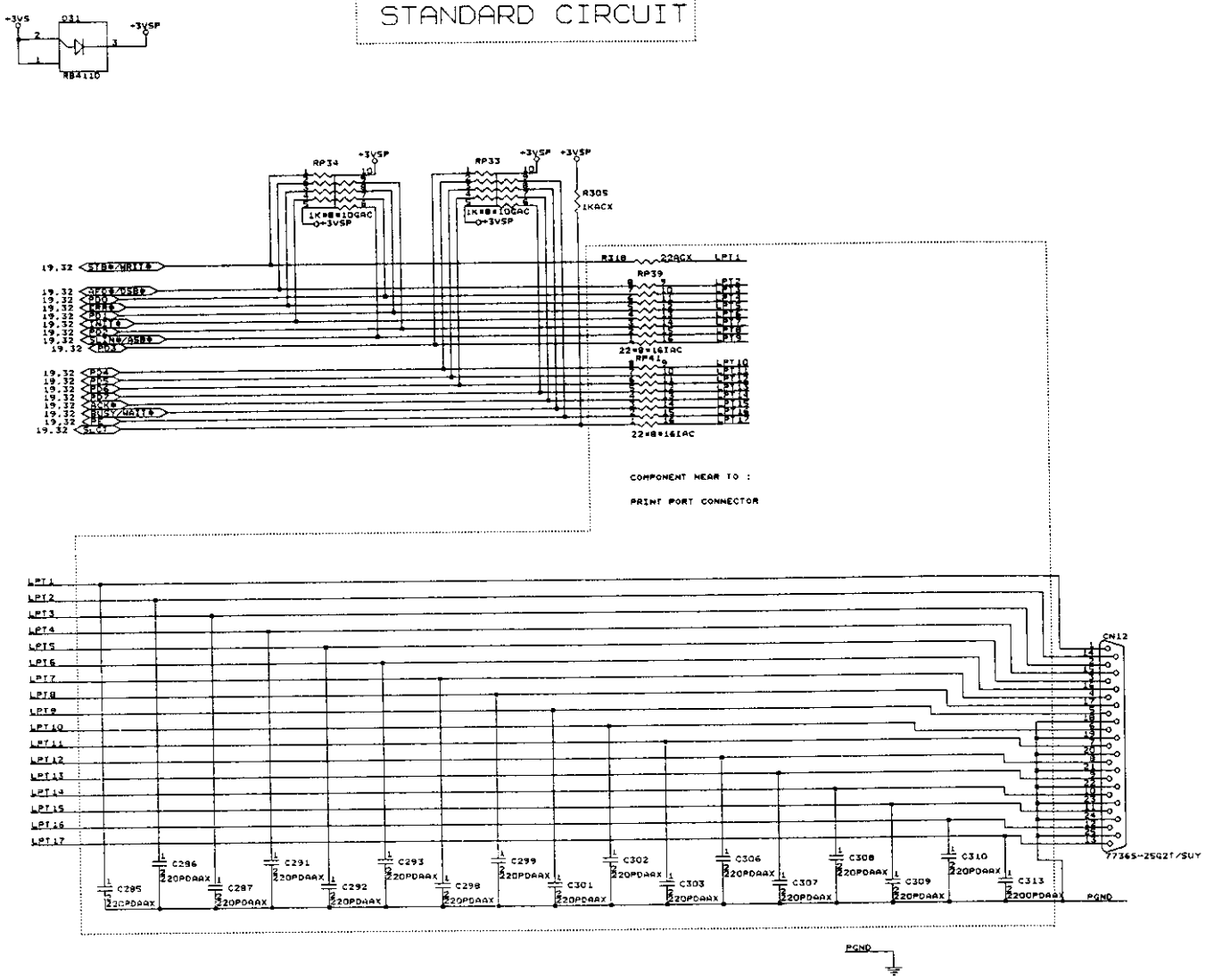

FIC AMBER		
Title	PARALLEL PORT	
Size C	Document Number PRINT.SCH (PCB VER:0.8)	REV 0.7
Date: October 14, 1998	Sheet 20 of 35	

REV.0.4 => REV.0.5
8/2 ADD C337,C336 THEN C337 IS NU PART
8/2 R232 VALUE CHANGE TO 1K
8/2 R231 VALUE CHANGE TO 4.7K

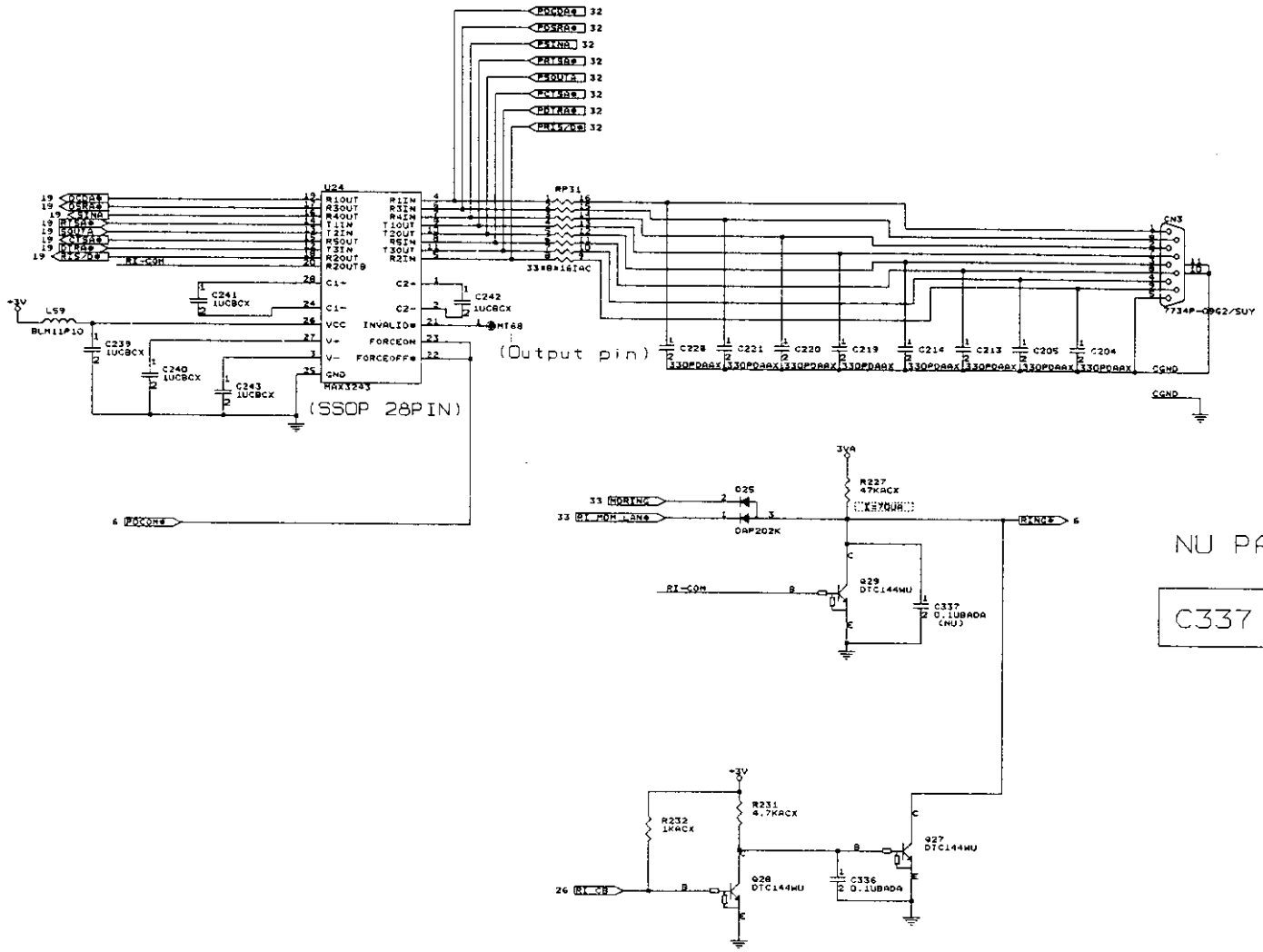

NU PARTS:

C337

Title	FIC AMBER
	SERIAL PORT
Size C	Document Number COM.SCH (PCB VER:0.8)
	REV 0.7
Date: October 14, 1999	Sheet 21 of 36

REV.0.4 ==> REV.0.5

8/2 L57 CHANGE TO NU PART

8/2 C216 ADD L67 TO +3V

8/2 U17(110,83) ADD R356,R357 TO GND

REV.0.6 ==> REV.0.7

9/11 R249 0 CHANGE TO BEAD FOR EMI

9/11 C223 FROM NU CHANGE TO 10PF

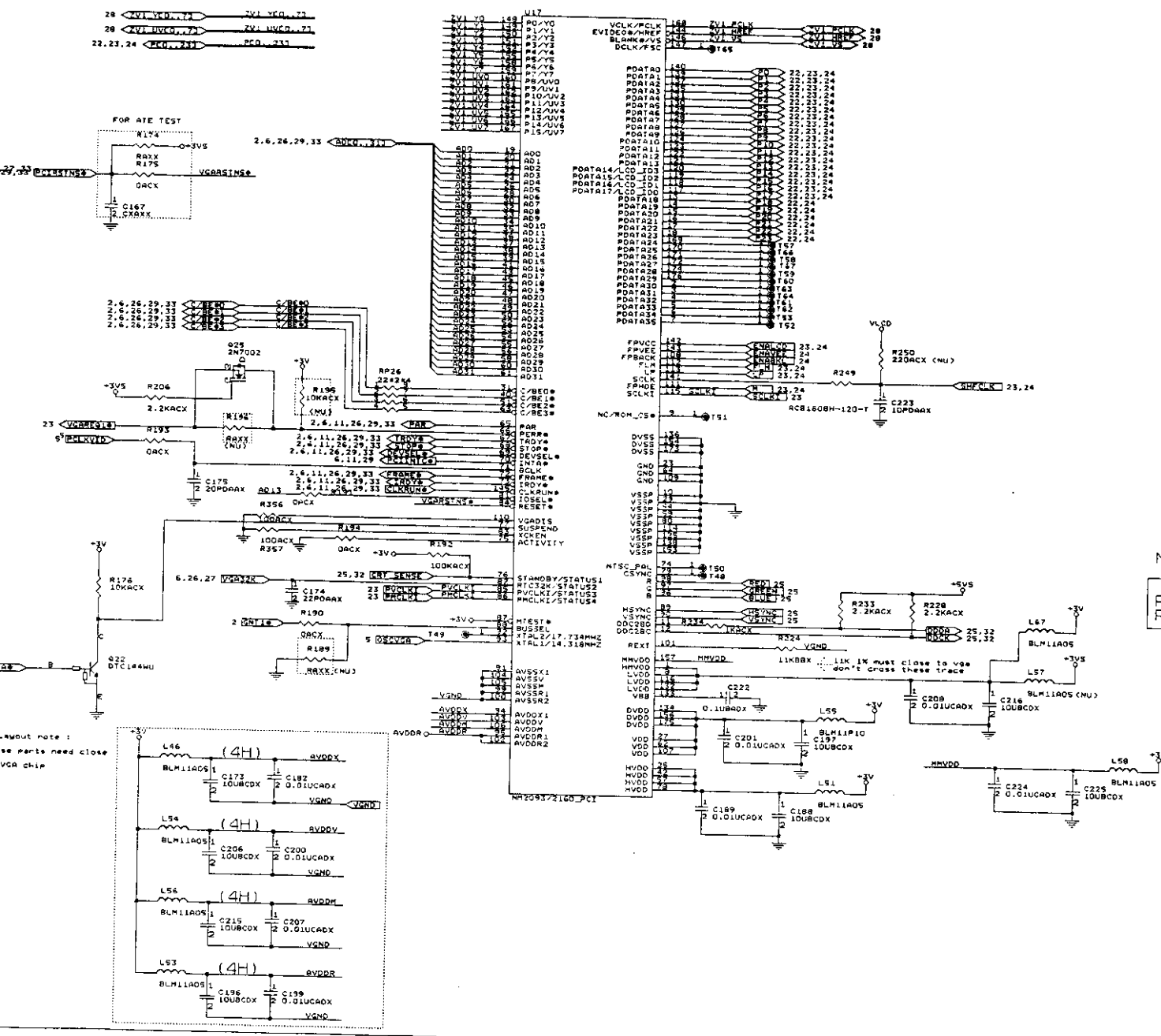

NU PARTS :

R174,C167,R196,R195,R189,C175
R250,L57

-Swout note :
se parts need close
VGA chip

Title	FIC AMBER
	VGA CONTROLLER
Size C	Document Number NSVGA.SCH (PCB VER:0.8)
	REV 0.7
Date: October 14, 1998	Sheet 22 of 35

VGA clock generator circuit

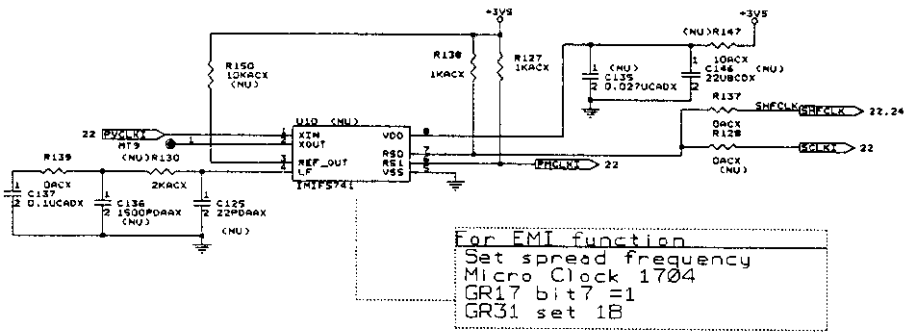

For EMI function
Set spread frequency
Micro Clock 1704
GR17 bit7 =1
GR31 set 1B

VGA & LCD power circuit

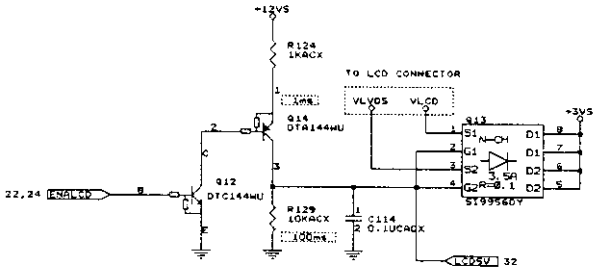

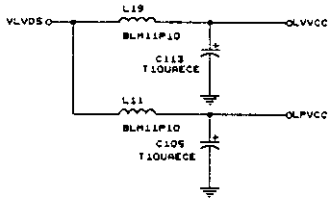

REV0.2 —> REV0.3
6/17 Q13 PIN4 ADD MODULE LCD5V

REV.0.4 ==> REV.0.5
8/2 R128 CHANGE TO NU PART
8/2 U19(11) ADD R385,R384
8/2 U19(14) ADD MODULE VOLONN
8/2 U19(15) ADD MODULE VOLON

REV.0.6 ==> REV.0.7
9/11 CHANGE SOME PARTS TO NU
U10,C125,C135,C136,C146,R150,R130,R147
9/11 R222 FROM 22K CHANGE TO 100K

THC63LVDF63A pin14 NC

18bit LVDS Panel (65MHz)

Layout note:
All trace must be same long

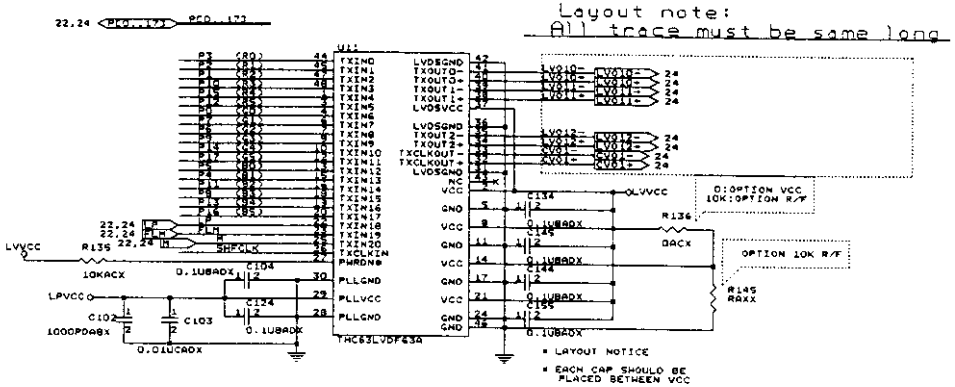

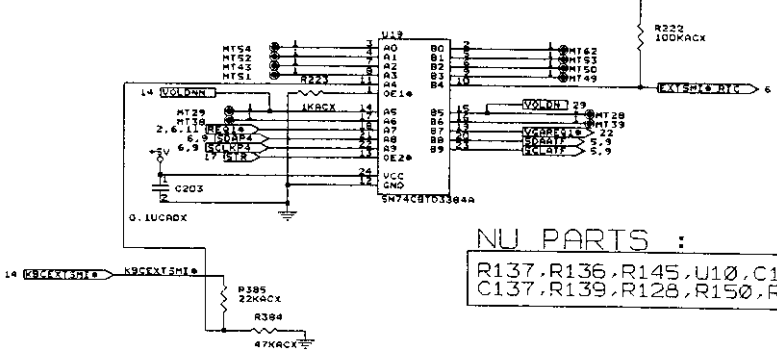

NU PARTS :

R137,R136,R145,U10,C125,C135,C146
C137,R139,R128,R150,R130,R147

FIC AMBER		
Title VGA POWER		
Size C	Document Number NSPOWER.SCH (PCB VER:0.9)	REV 0.7
Date: October 14, 1999	Sheet 23 of 35	

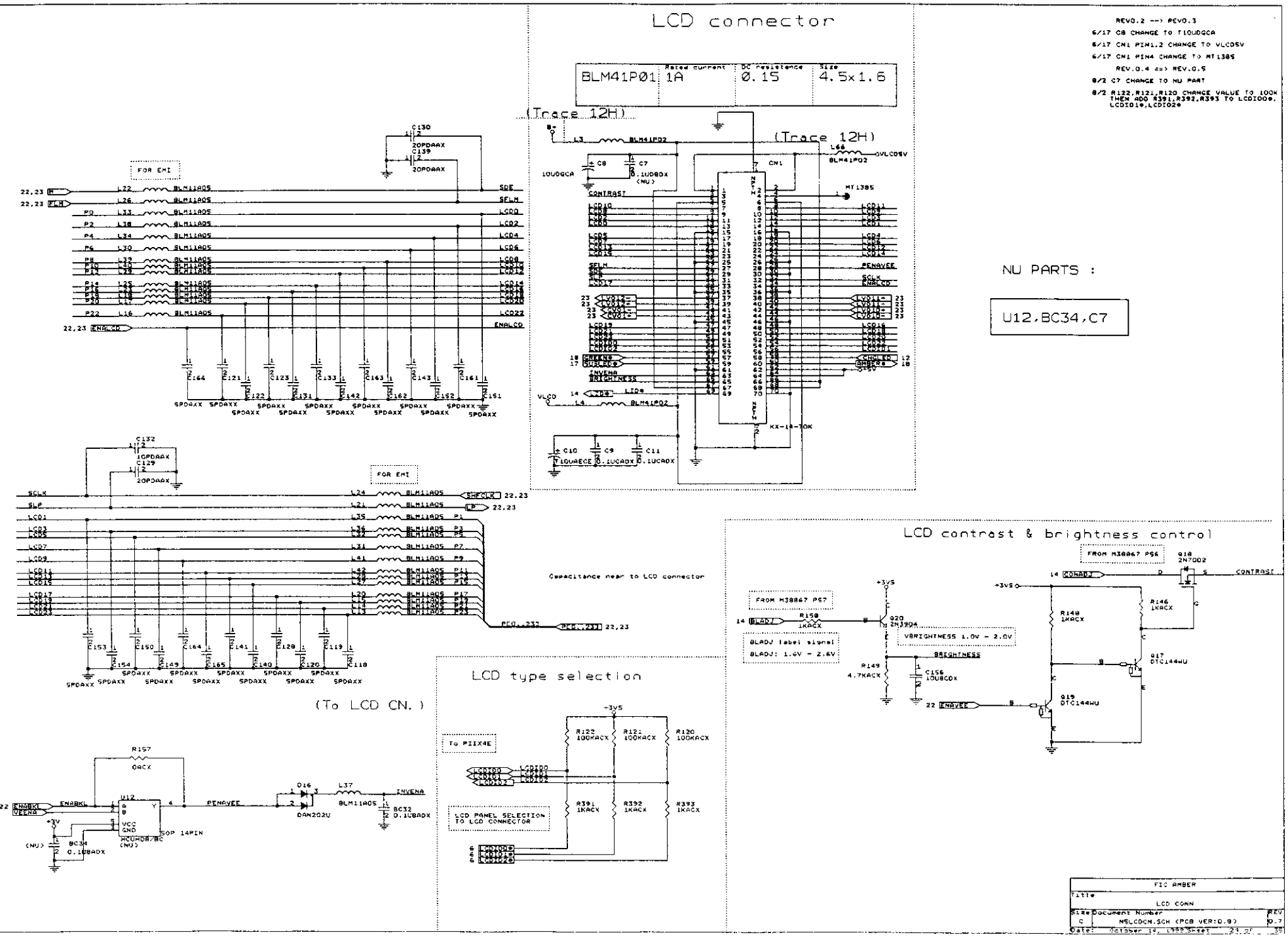
LCD connector
BLM41P01 | Rated current 1A | DC resistance 0.15 | Size 4.5x1.6
(Trace 12H)
(Trace 12H)
CN1
KX-14-70K
FOR EMI
FOR EMI
(To LCD CN.)
Capacitance near to LCD connector
LCD contrast & brightness control
FROM M38867 PS6
Q18 2N7002
FROM M38867 PS7
BLADJ label signal
BLADJ: 1.6V - 2.6V
VBRIGHTNESS 1.0V - 2.0V
LCD type selection
To PIIX4E
LCD PANEL SELECTION TO LCD CONNECTOR
U12
MCUHD8/8C (NU)
SOP 14PIN
DAN202U
NU PARTS :
U12,BC34,C7
REV0.2 --> REV0.3
6/17 C8 CHANGE TO T10UDGCA
6/17 CN1 PIN1,2 CHANGE TO VLCD5V
6/17 CN1 PIN4 CHANGE TO MT1385
REV.0.4 ==> REV.0.5
8/2 C7 CHANGE TO NU PART
8/2 R122,R121,R120 CHANGE VALUE TO 100K THEN ADD R391,R392,R393 TO LCDID0#, LCDID1#,LCDID2#
FIC AMBER
Title LCD CONN
Size C Document Number NSLCDCN.SCH (PCB VER:0.8) REV 0.7
Date: October 10, 1998 Sheet 23 of 35

REV.0.4 => REV.0.5
8/2 F1 CHANGE TO D34(EC20QS03)

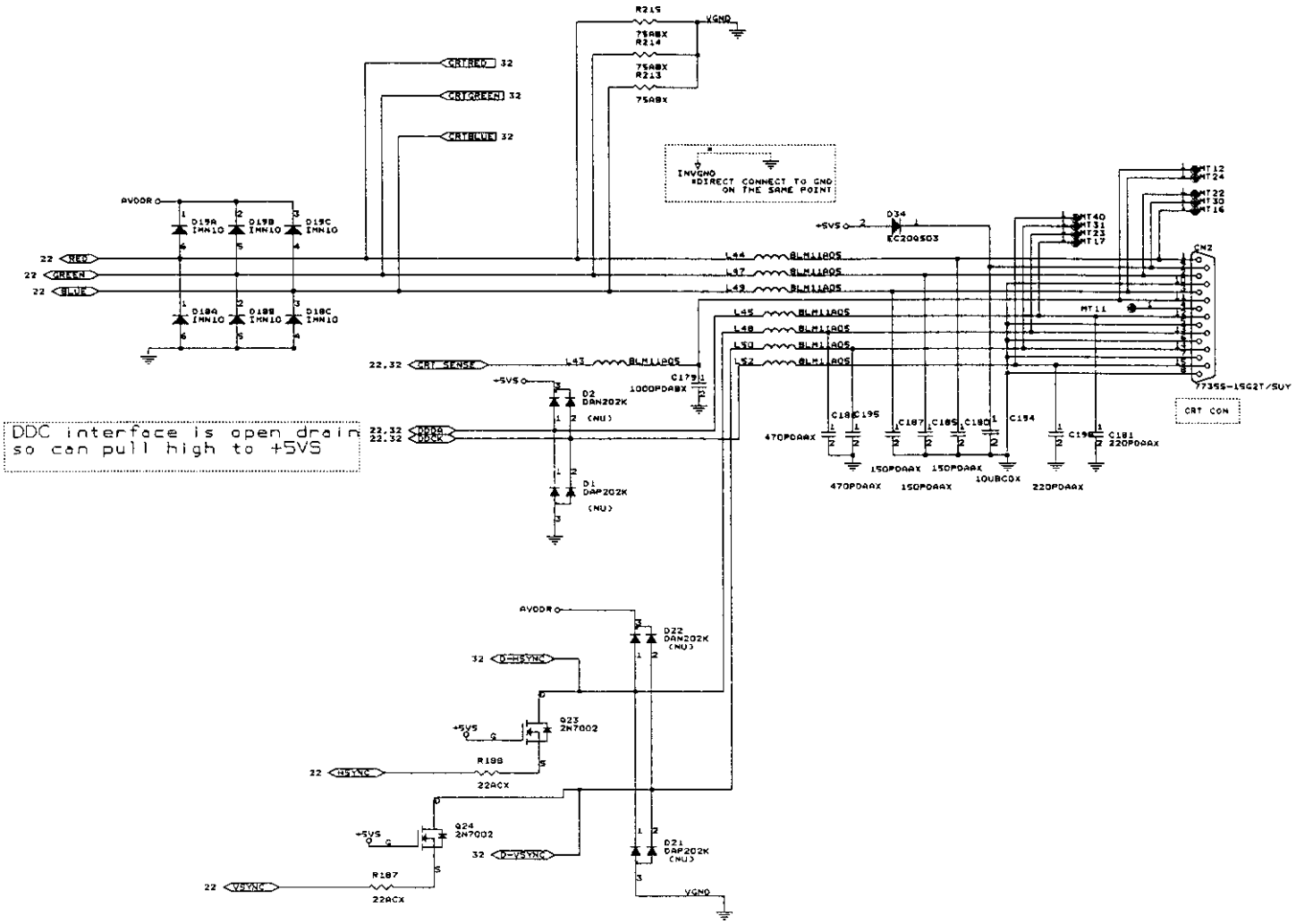

FIC AMBER		
Title: VGA CRT CONNECTOR		
Size: C	Document Number: NSCRTCN.SCH (PCB VER:0.8)	REV: 0.7
Date: October 14, 1998	Sheet 23 of 35	

BIOS note:

BIOS program : 83 BIT3 1 change to 0

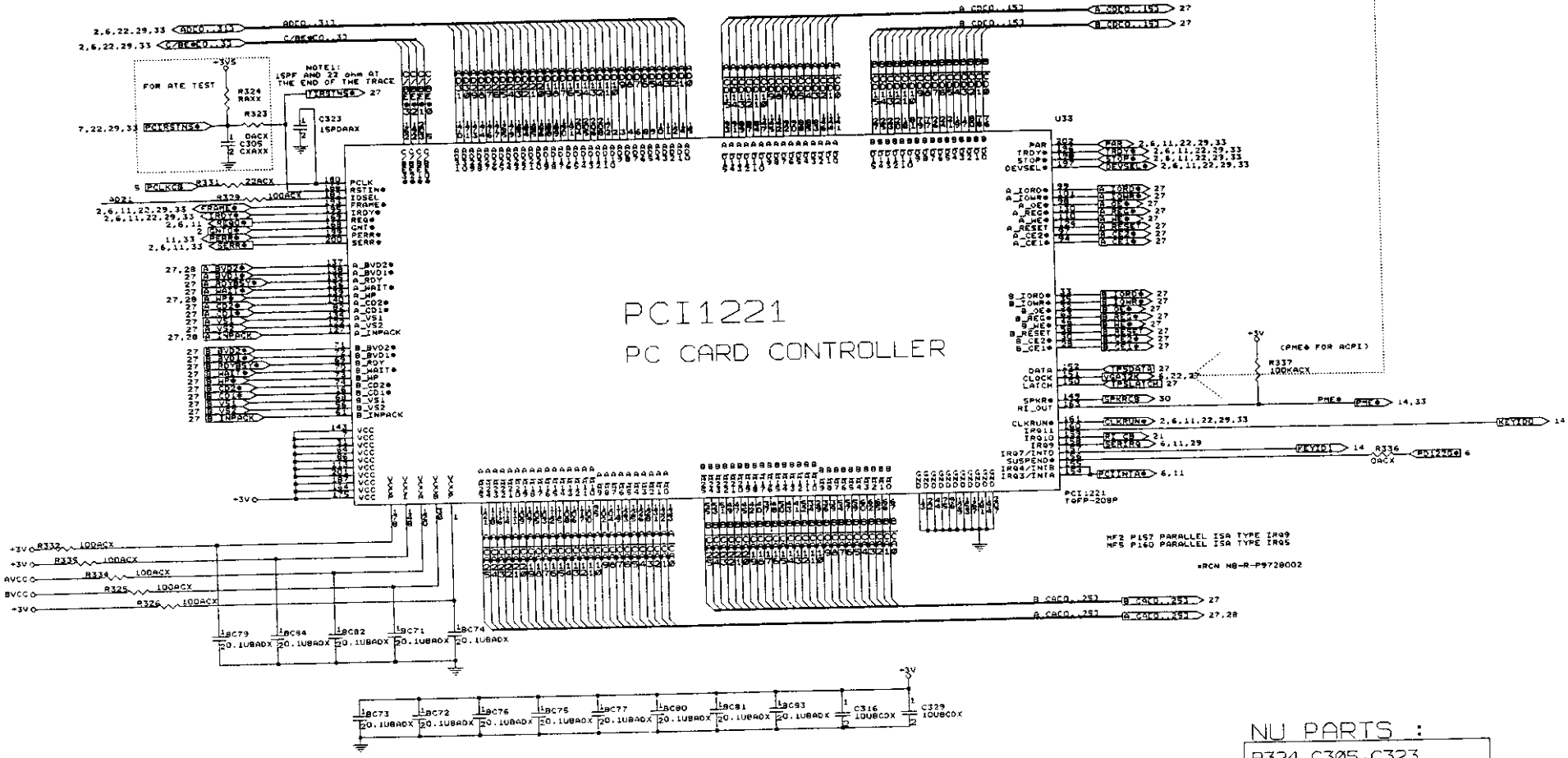

NU PARTS :

R324,C305,C323

Title	FIC AMBER
	CARD BUS
Size C	Document Number 1220.SCH (PCB VER:0.8)
	REV 0.7
Date: October 14, 1999	Sheet 20 of 35

REV0.2 —> REV0.3

6/17 C295,C296,C311 CHANGE TO T10UDGCA

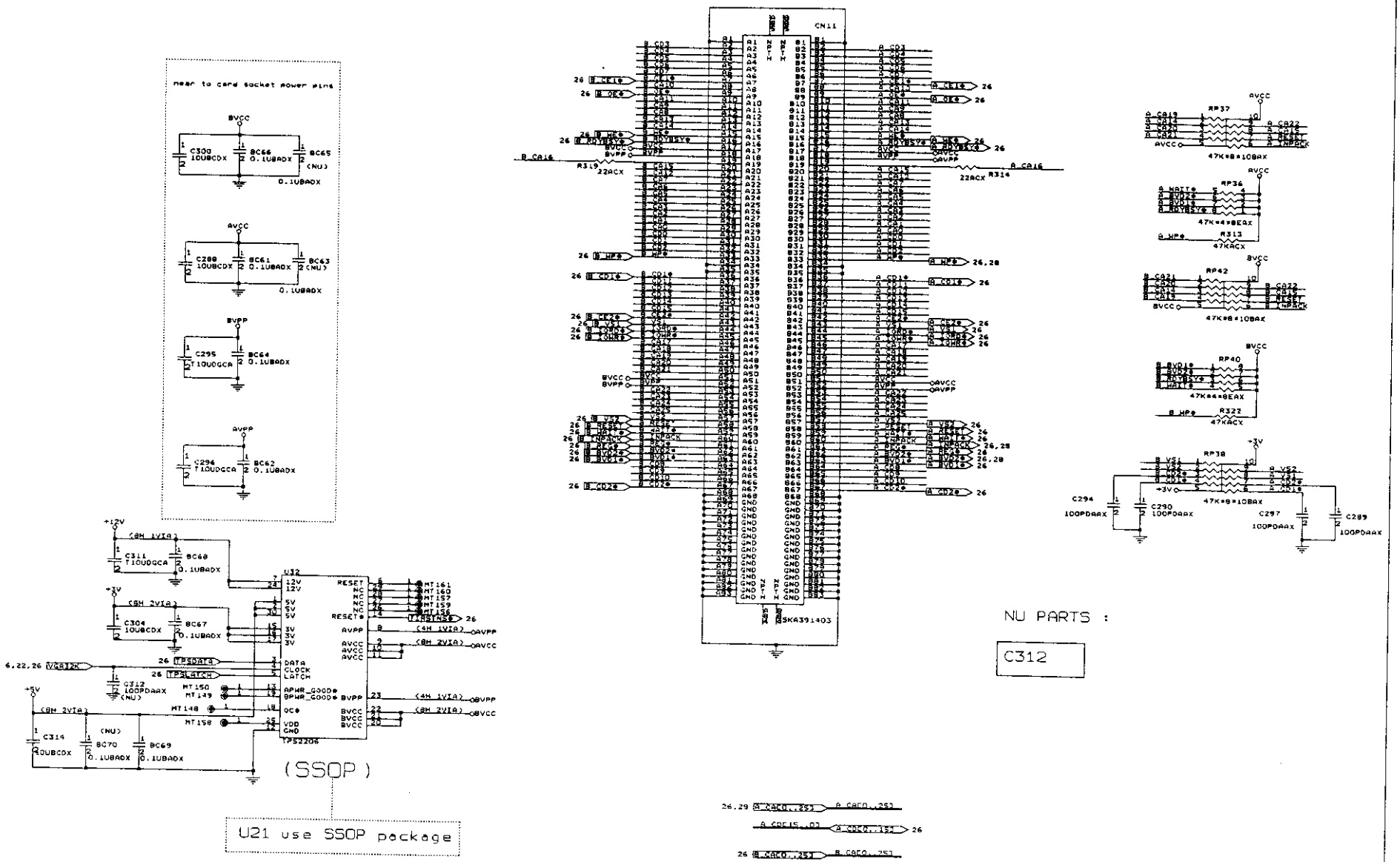

Title	FIC AMBER
	CARD BUS SOCKET
Size C	Document Number PCCARD.SCH (PCB VER:0.8)
	REV 0.7
Date: October 24, 1996	Sheet 27 of 72

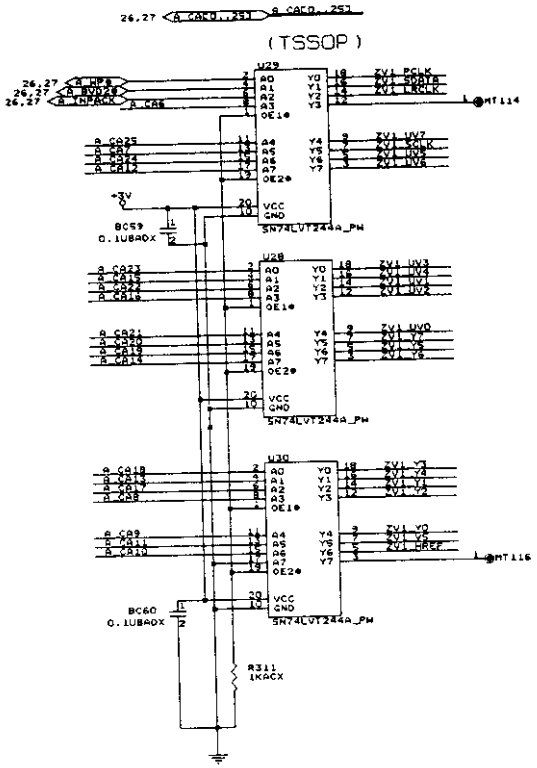

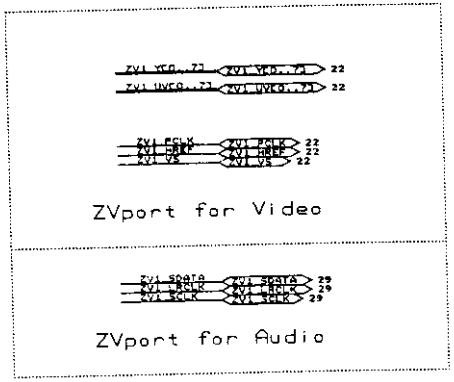

Title	FIC AMBER
	ZVPORT
Size C	Document Number ZVPORT.SCH (PCB VER:0.8)
	REV 0.7
Date:	October 14, 1999 Sheet 23 of 35

REV. 0.1 => REV. 0.2 MODIFICATION
6/1 Y2 CHANGE TYPE THEN CANCEL MT4,MT5
REV.0.4 => REV.0.5
8/2 R57 CHANGE TO NU PART
8/2 R58,R56,R59,R57,R55,R60,U4(100..),R97 CONNECT TO A_3V
8/2 U4(49,50) SHORT THEN ADD MODULE VOLDN
8/2 U4(100..) ADD R368,R367 TO +3VS,+3V
8/2 U4(84) R96 CANCEL THEN SHORT AND ADD R369,R370

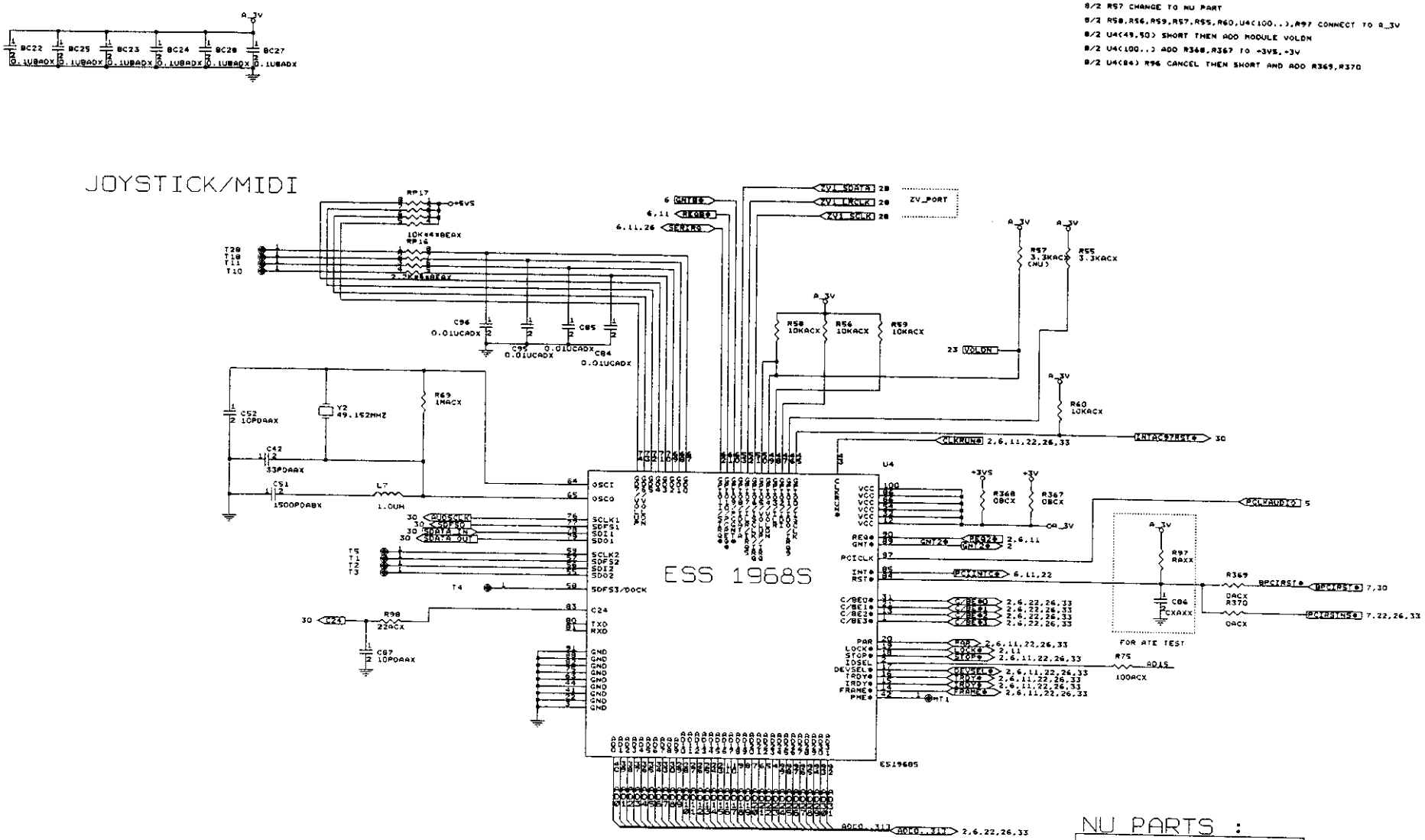

Title	FIC AMBER
	MAESTRO 2
Size C	Document Number: AUDM2.SCH (PCB VER:0.8)
Date: October 16, 1998	Sheet 23 of 33
REV	0.7

REV0.2 --> REV0.3

6/17 MODSPKR ADD R346,R345 22K

REV.0.4 ==> REV.0.5

8/2 C350,R380 CHANGE TO NU PARTS

8/2 L9 CONNECT TO A_3V

8/2 C59,C58,R73,Y1 CANCEL

8/2 U6(35,36) ADD C340,C341

8/2 U6(24,23) C35,C34 CANCEL THEN SHORT

8/2 C37,C30 TO CN18 ADD PARTS
C344,R359,R358,C342
C345,R361,R360,C343

8/2 C36 TO CN18 CONNECT TO AGND

8/2 R54 PARALLEL C335

8/2 CHANGE VALUE
R61--->2.2K R63--->270K C32--->10PF R345--->15K

8/2 R346 TO MODSPKR ADD C339

8/2 R345 PARALLEL C338

8/2 U7(1) ADD R371 TO +5V

8/2 U7(4) ADD R372,R373 TO +12V,-12VS

8/2 U7(5,7),Q11(5,6,7,8) CANCEL +5VS
THEN ADD R374,R375 TO +5VS,+5V

REV.0.6 ==> REV0.7

9/11 CODEC RESET CHANGE R74 TO R68

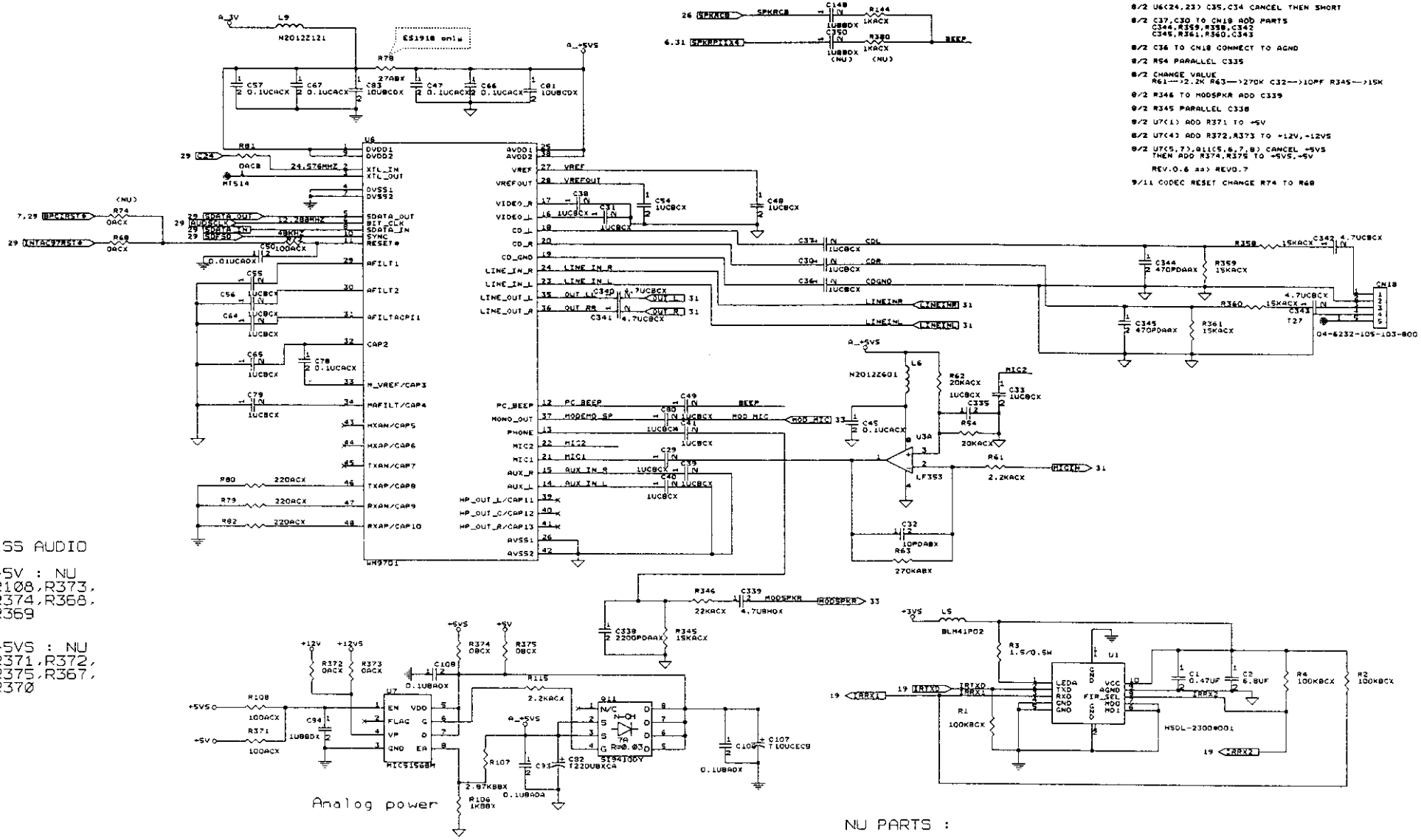

ESS AUDIO

+5V : NU
R108,R373,
R374,R368,
R369

+5VS : NU
R371,R372,
R375,R367,
R370

NU PARTS :

R78,C59,C58,Y1,R73
R74,C78,C79,R80
R79,R82,C350,R380

Title	FIC AMBER
	Garnet audio board AC97 Codec
Size C	Document Number GACODEC.SCH (PCB VER:0.9)
REV	0.7
Date: October 14, 1999	Sheet 30 of 34

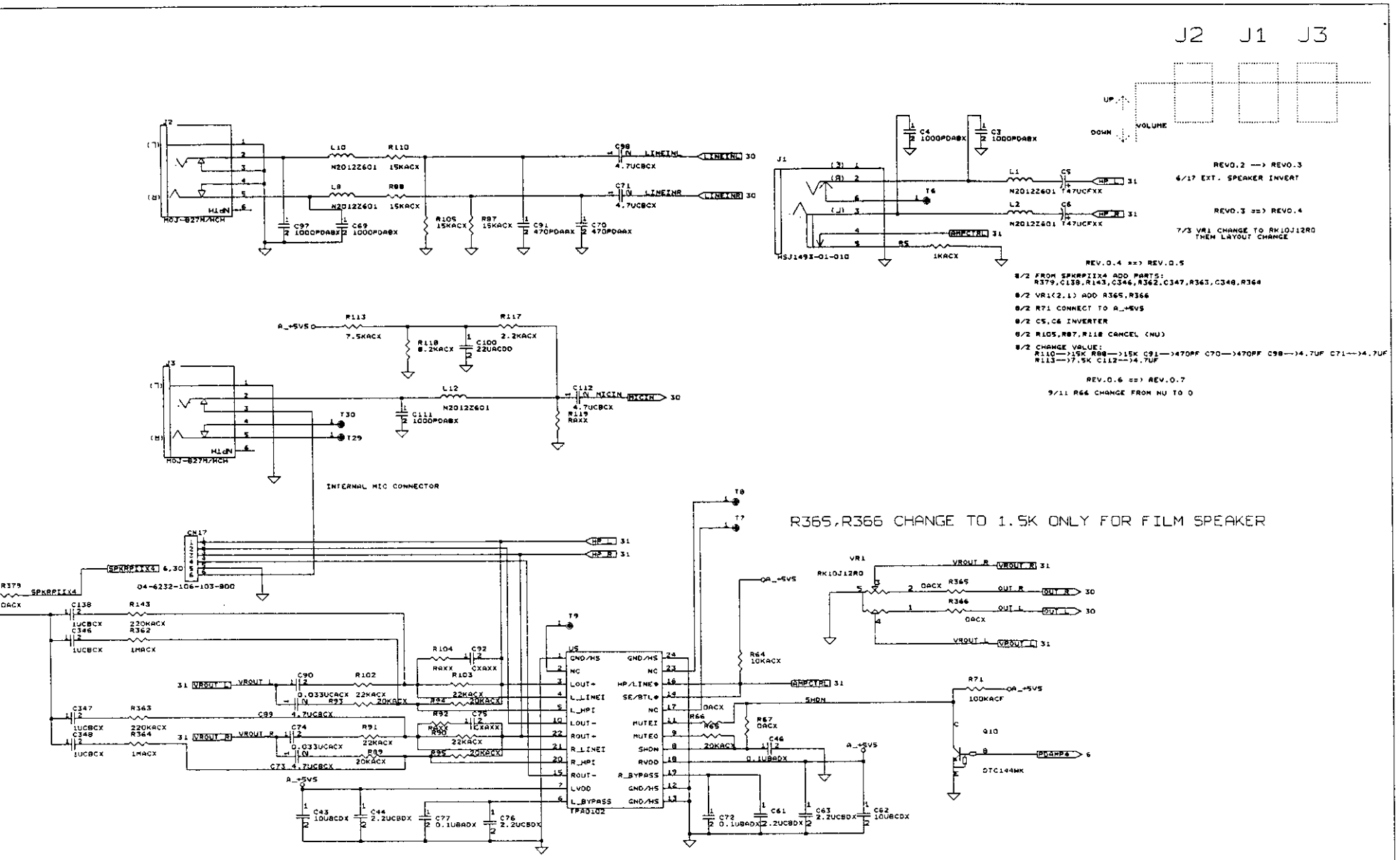
J2 J1 J3
UP
DOWN
VOLUME
REV0.2 --> REV0.3
6/17 EXT. SPEAKER INVERT
REV0.3 ==> REV0.4
7/3 VR1 CHANGE TO RK10J12R0
THEN LAYOUT CHANGE
REV.0.4 ==> REV.0.5
8/2 FROM SPKRPIIX4 ADD PARTS:
R379,C138,R143,C346,R362,C347,R363,C348,R364
8/2 VR1(2,1) ADD R365,R366
8/2 R71 CONNECT TO A_+5VS
8/2 C5,C6 INVERTER
8/2 R105,R87,R118 CANCEL (NU)
8/2 CHANGE VALUE:
R110--->15K R88--->15K C91--->470PF C70--->470PF C98--->4.7UF C71--->4.7UF
R113--->7.5K C112--->4.7UF
REV.0.6 ==> REV.0.7
9/11 R66 CHANGE FROM NU TO 0
INTERNAL MIC CONNECTOR
R365,R366 CHANGE TO 1.5K ONLY FOR FILM SPEAKER
NU PARTS :
R119
R104,C92,R92,C75,R65
FIC AMBER
Title
Garnet audio board AMP and Jack
Size C
Document Number
GAMPJACK.SCH (PCB VER:0.9)
REV 0.7
Date: October 14, 1998 Sheet 31 of 34

DOCKING CONN

REV0.2 --> REV0.3

6/17 U25 PIN2 ADD 0.1UF TO GND

6/17 U25 PIN3 CHANGE TO VLCD5V
U25 PIN4 CHANGE TO LCD5V

6/17 CN6 PIN71,73,75,77,79 SHORT

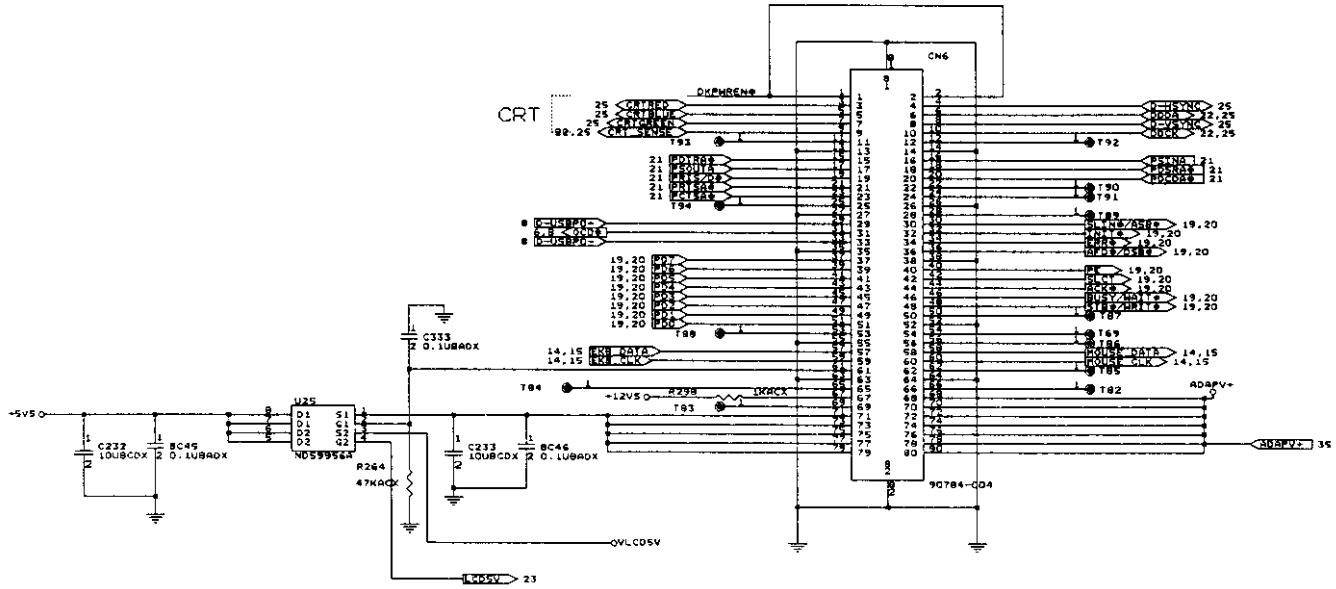

Title	FIC AMBER
	DOCKING CONNECTOR
Size C	Document Number DOCKING.SCH (PCB VER:0.8)
REV	0.7
Date: October 14, 1998	Sheet 32 of 35

MODEM/LAN CONNECTOR

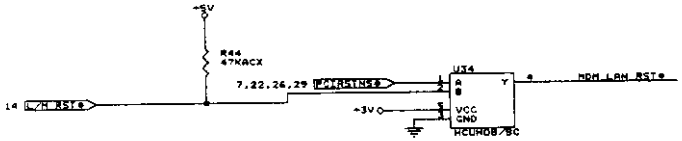

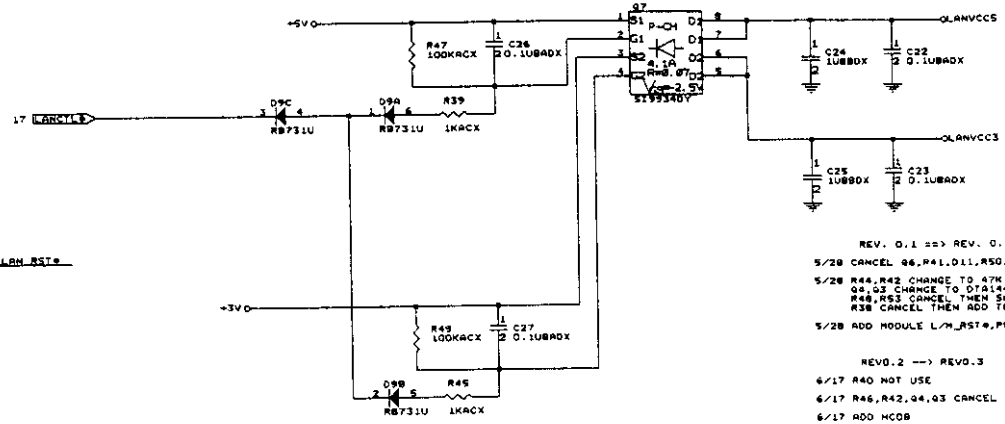

REV. 0.1 ==> REV. 0.2 MODIFICATION

5/28 CANCEL Q6,R41,D11,R50,R52,D10B,Q5,R43,U2

5/28 R44,R42 CHANGE TO 47K
Q4,Q3 CHANGE TO DTA144WU
R48,R53 CANCEL THEN SHORT
R38 CANCEL THEN ADD TEST POINT MT170,MT171

5/28 ADD MODULE L/M_RST#,PME#

REV0.2 --> REV0.3

6/17 R40 NOT USE

6/17 R46,R42,Q4,Q3 CANCEL

6/17 ADD HC08

STR RESET TIMIMG

LAN/MODEM POWER CONTROL TRUTH TABLE

PWRON	STR#	WAKEUP#	ACIN	L/M#_TYPE	LANCTL#		
1	1	0	1	1	0	POWER ON	LAN ADAPTOR_IN
1	0	0	1	1	0	S2R	
0	1	X	1	1	1	POWER OFF	
1	0	1	1	1	1	S2R	
1	1	0	0	1	0	POWER ON	LAN BATTERY ONLY
1	0	1	0	1	1	S2R	
0	1	X	0	1	1	POWER OFF	
1	1	0	1	0	0	POWER ON	MODEM ADAPTOR_IN
1	0	0	1	0	0	S2R	
0	1	X	1	0	1	POWER OFF	
1	0	1	1	0	1	S2R	
1	1	0	0	0	0	POWER ON	MODEM BATTERY ONLY
1	0	0	0	0	0	S2R	
0	1	X	0	0	1	POWER OFF	
1	0	1	0	0	1	S2R	

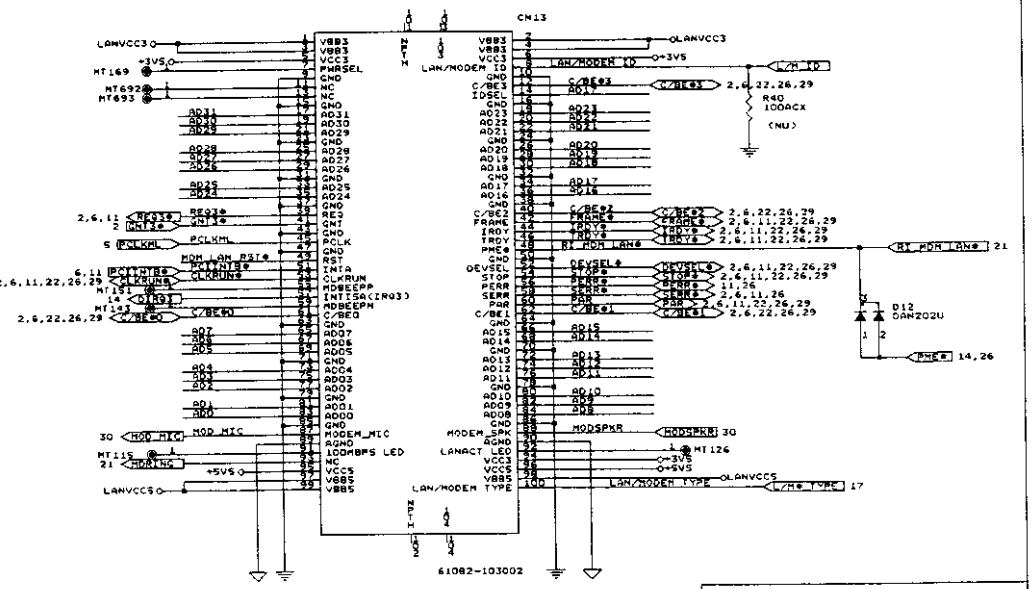

FIC AMBER		
Title	MODEM/LAN CONN	
Size C	Document Number MDLNCN.SCH (PCB VER:0.8)	REV 0.7
Date: October 14, 1998	Sheet 33 of 35	

MODE transfer

	ON	STR	STD	ME OFF
+5V	5	5	0	0
+5VS	5	0	0	0
+12V	12	12	0	0
+12VS	12	0	0	0
+3V	3.3	3.3	0	0
+3VS	3.3	0	0	0
VDDA	5	5	5	0
BM+	10~20	10~20	0	0
B+	10~20	10~20	10~20	0
VIO_REGUL	2.5	0	0	0
+DRAM	3.3	3.3	0	0
3VA	3.3	3.3	3.3	0
VCCSUS	3.3	3.3	3.3	0
+RTCVCCS	3.3	3.3	3.3	3.3

REV.0.4 ==> REV.0.5

8/2 Q36(4) ADD R376,C349 THEN C349 IS NU PART

10/15 REV:0.7 ==> REV:0.8

R376 NU (PCB SHORT)

NU PARTS :

R295,R275,C349

POWER PLANE

$\frac{12V}{270K}$ =44.4uA (ON ?)

TC=RC=270K*E3*0.1*E-6

= 27 msec(?)

STC = 27*5 = 135ms

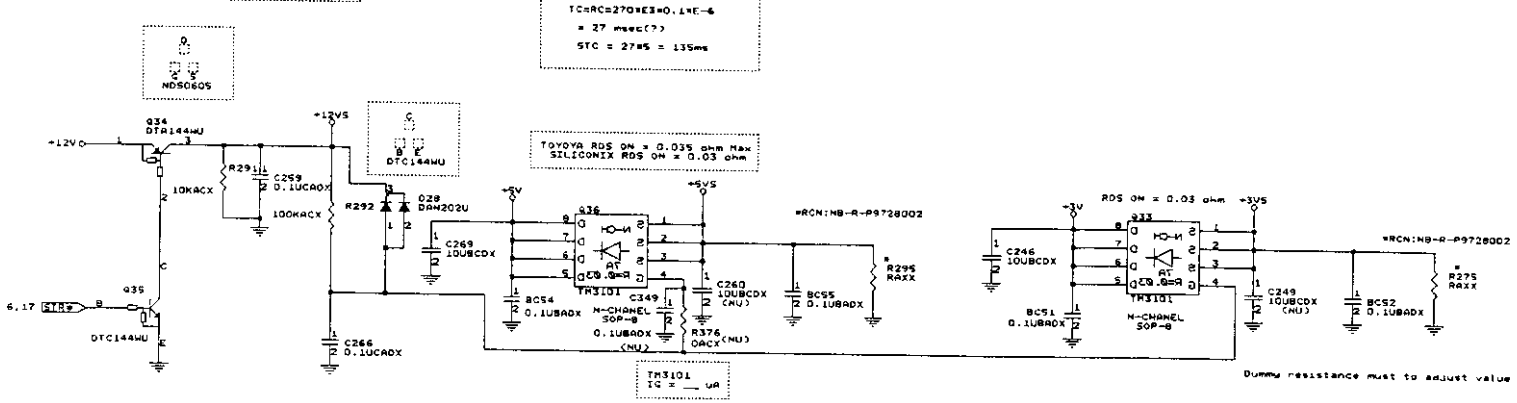

Title	FIC AMBER	
	POWER PLANE	
Size C	Document Number DC:IF.SCH (PCB VER:0.8)	REV 0.7
Date: October 15, 1999	Sheet 34 of 34	

REV0.2 —> REV0.3

6/17 CN16 PIN2,3 SHORT

6/17 C316,C326 CHANGE TO T10U0GCA

REV 0.6 =>> REV 0.7

9/11 R333 100K CHANGE TO 4.7K

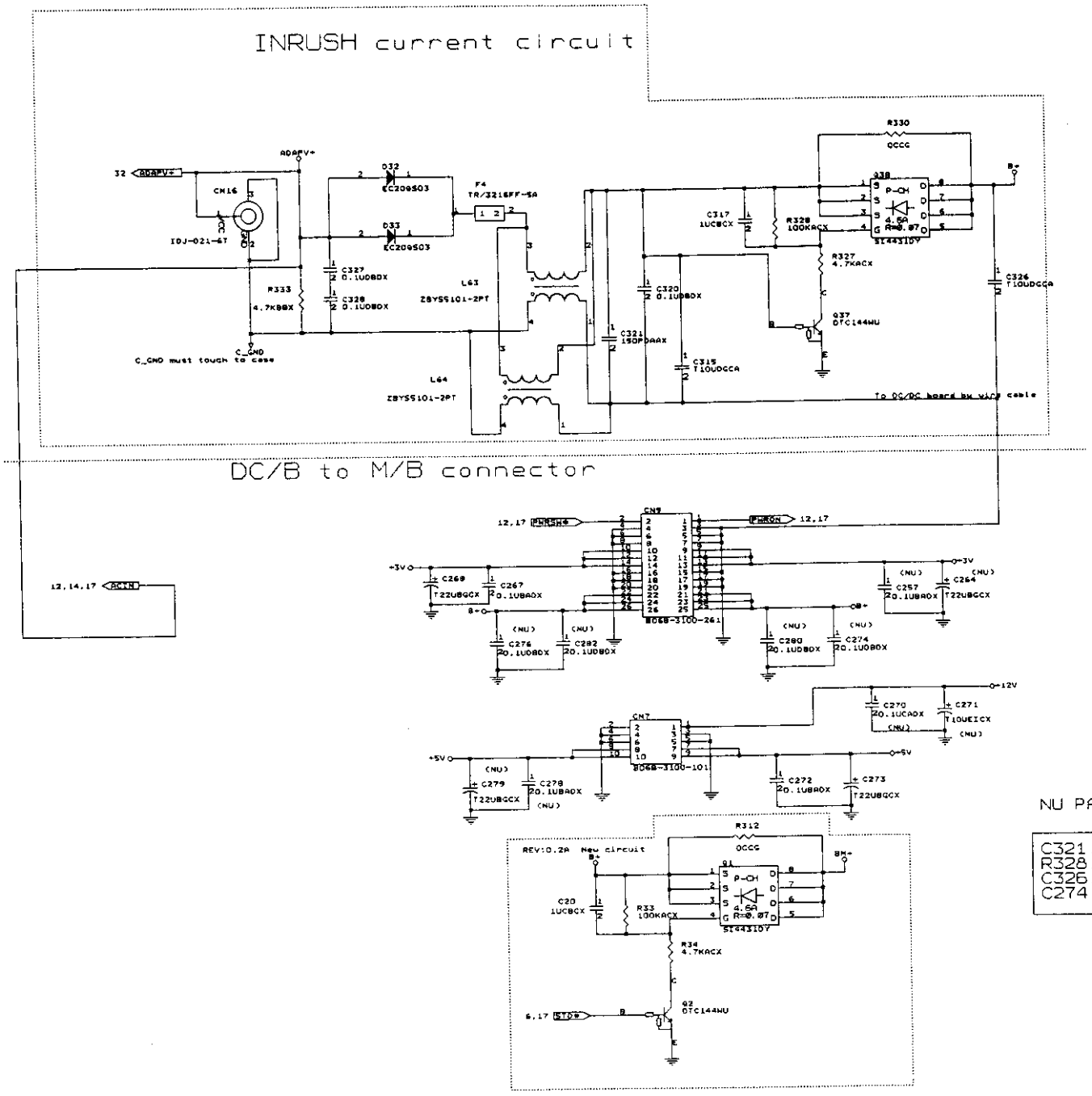

NU PARTS :

C321,C320,C315,C317
R328,R327,Q37,Q38
C326,C20,R33,R34,Q2,Q1
C274,C280,C282,C276

Title	FIC AMBER	
	DC-DC /IF	
Size C	Document Number DC2IF.SCH (PCB VER:0.8)	REV 0.7
Date: October 14, 1998	Sheet 35 of 35	

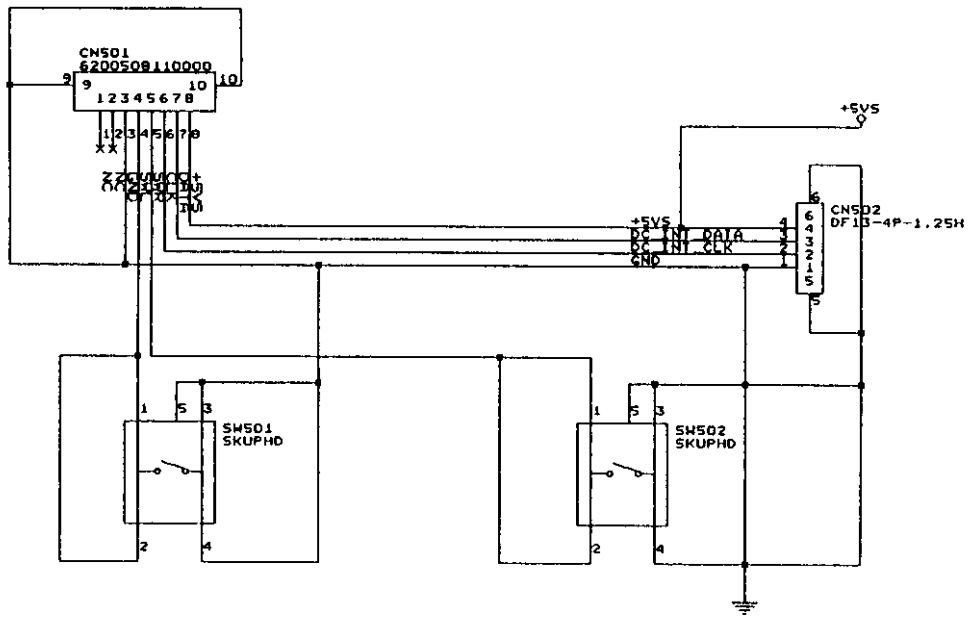

梁志鵬 10/11.

Title	AMBER 2.0	
Size B	Document Number AGD.SCH (PCB VERSION 0.8)	REV 0.4
Date: October 13, 1998	Sheet 1 of 1	

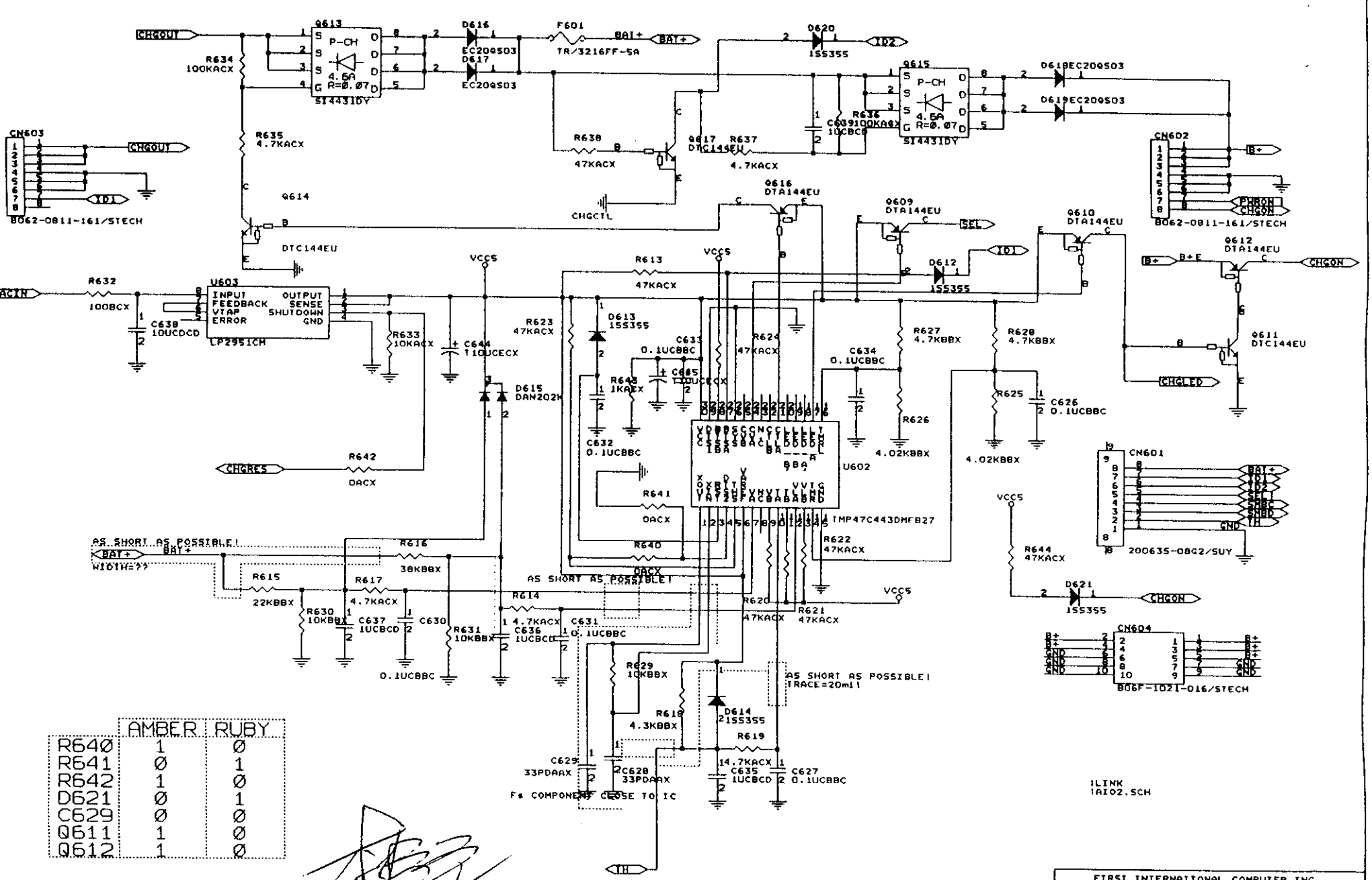

	AMBER	RUBY
R640	1	0
R641	0	1
R642	1	0
D621	0	1
C629	0	0
Q611	1	0
Q612	1	0

10/15 98'

FIRST INTERNATIONAL COMPUTER.INC.
DESIGN BY LARRY LEE(H/W TEAM-1)

Title: AMBER 2.0 CHARGER CONTROLLER

Size: B | Document Number: AI01.SCH (PCB VER:0.8) | REV: 0.7

Date: October 15, 1998 | Sheet 1 of 2

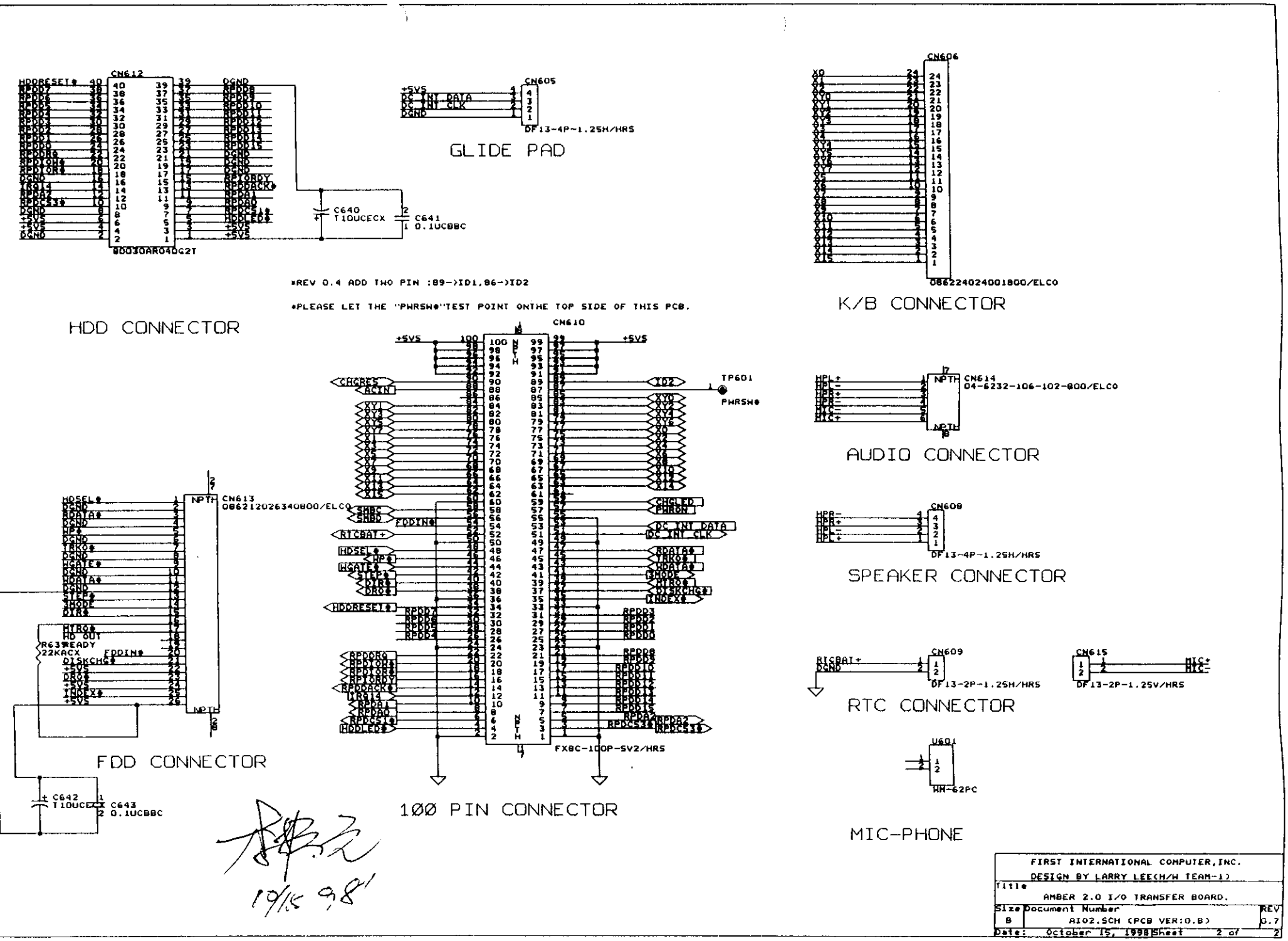

FIRST INTERNATIONAL COMPUTER,INC.	
DESIGN BY LARRY LEE(H/W TEAM-1)	
Title: AMBER 2.0 I/O TRANSFER BOARD.	
Size: B	Document Number: AI02.SCH (PCB VER:0.B)	REV: 0.7
Date: October 15, 1998	Sheet 2 of 2

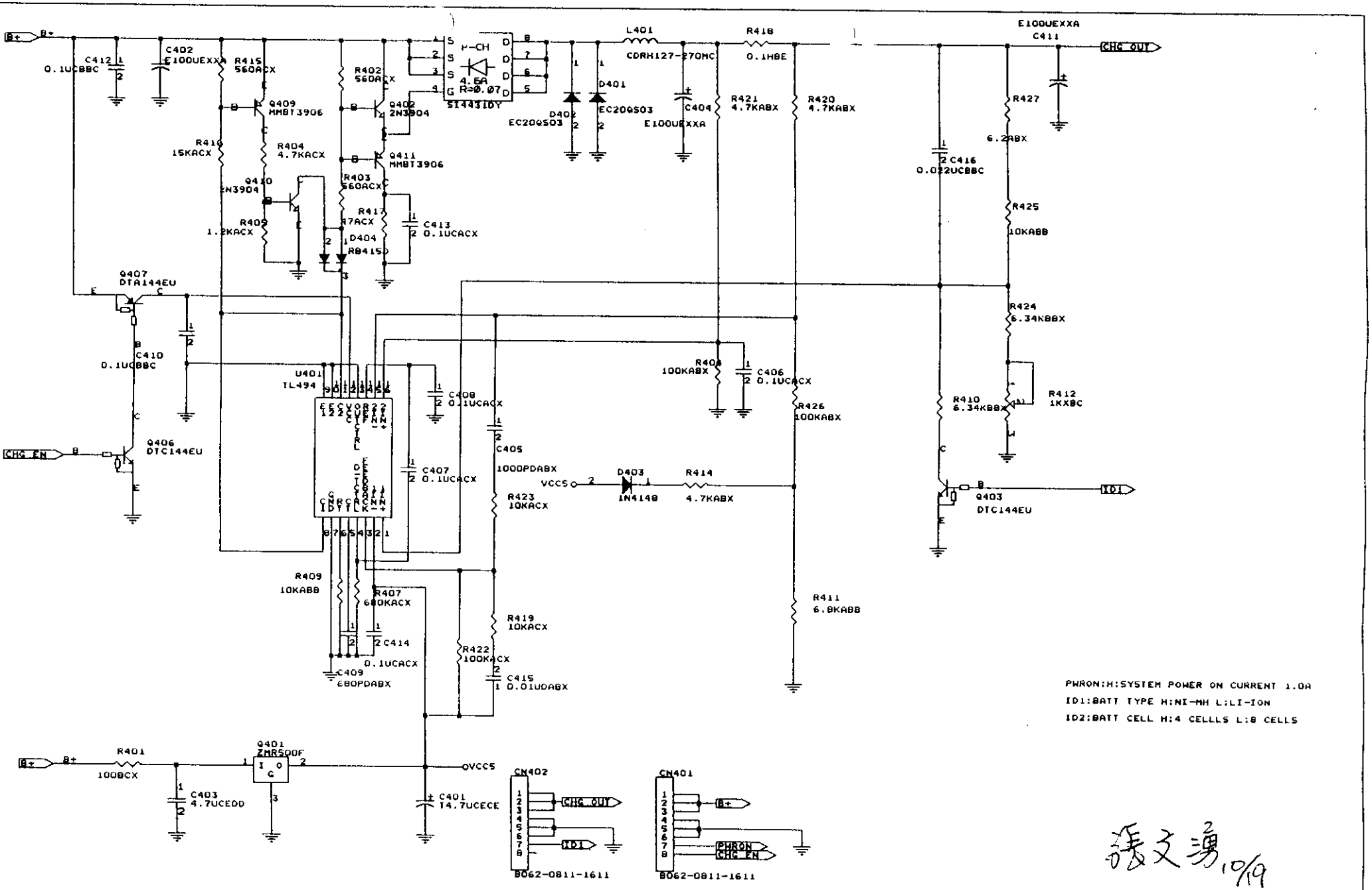
B+
C412 0.1UCBBC
C402 E100UEXXA
R415 560ACX
Q409 MMBT3906
R416 15KACX
R404 4.7KACX
Q410 2N3904
R409 1.2KACX
R402 560ACX
Q402 2N3904
Q411 MMBT3906
R403 560ACX
R417 47ACX
D404 RB415
C413 0.1UCACX
P-CH 4.6A R=0.07
SI4431DY
D402 EC20QS03
D401 EC20QS03
L401 CDRH127-270MC
C404 E100UEXXA
R418 0.1HBE
R421 4.7KABX
R420 4.7KABX
E100UEXXA C411
CHG OUT
R427 6.2ABX
C416 0.022UCBBC
R425 10KABB
R424 6.34KBBX
R412 1KXBC
R410 6.34KBBX
Q403 DTC144EU
ID1
Q407 DTA144EU
C410 0.1UCBBC
U401 TL494
C408 0.1UCACX
C407 0.1UCACX
C405 1000PDABX
R423 10KACX
R408 100KABX
C406 0.1UCACX
R426 100KABX
VCC5
D403 1N4148
R414 4.7KABX
Q406 DTC144EU
CHG EN
R409 10KABB
R407 680KACX
C414 0.1UCACX
C409 680PDABX
R419 10KACX
R422 100KACX
C415 0.01UDABX
R411 6.8KABB
PWRON:H:SYSTEM POWER ON CURRENT 1.0A
ID1:BATT TYPE H:NI-MH L:LI-ION
ID2:BATT CELL H:4 CELLLS L:8 CELLS
R401 100BCX
Q401 ZMR500F
C403 4.7UCEDD
C401 14.7UCECE
VCC5
CN402
CHG OUT
ID1
B062-0811-1611
CN401
B+
PWRON
CHG EN
B062-0811-1611
FIRST INTERNATIONAL COMPUTER,INC.
BY JASON CHANG
Title
AMBER 2.0 CHARGER CIRCUIT
Size B
Document Number
BATTERY CHARGER(PCB VER:0.8)
REV 0.7
Date: October 15, 1998
Sheet 1 of 1

張文湧 10/19

REV:0.2

1)U23 pin80 change to REQ0# from REQ0#
2)U23 pin89 change to GNT0# from GNT0#
3)Cancel BC114
4)U23 pin 58 add resister for DOCKING
5)Cancel C251,C250,C249,C248
6)Cancel R246,R247,C247,C246
7)Cancel R242,C245

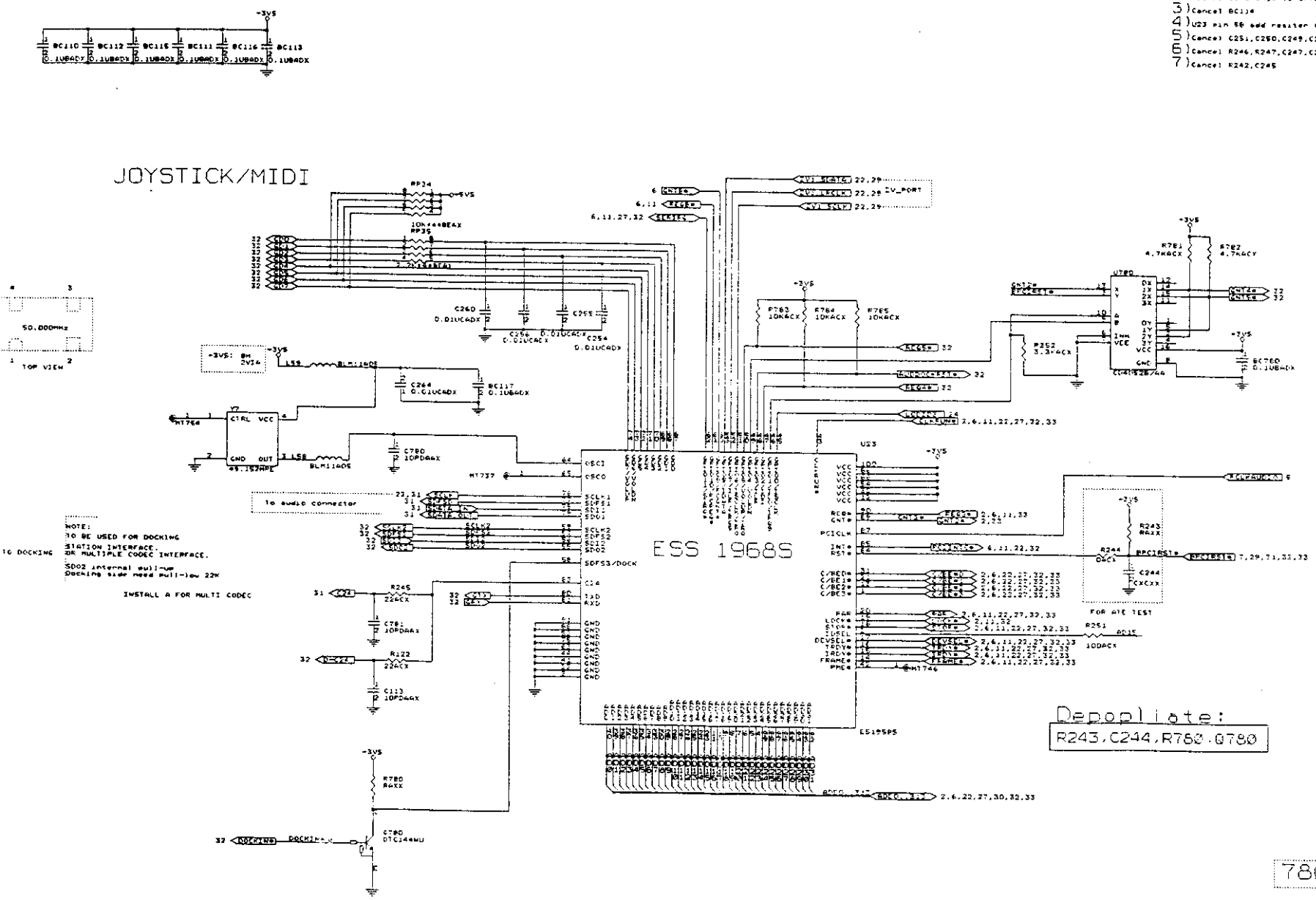

FIC	
Edit By:Eric Yang	
Title	MAESTRO 2
Size C	Document Number AUDM2.SCH
Rev 0.2	
Date: March 24, 1998	Sheet 30 of 36