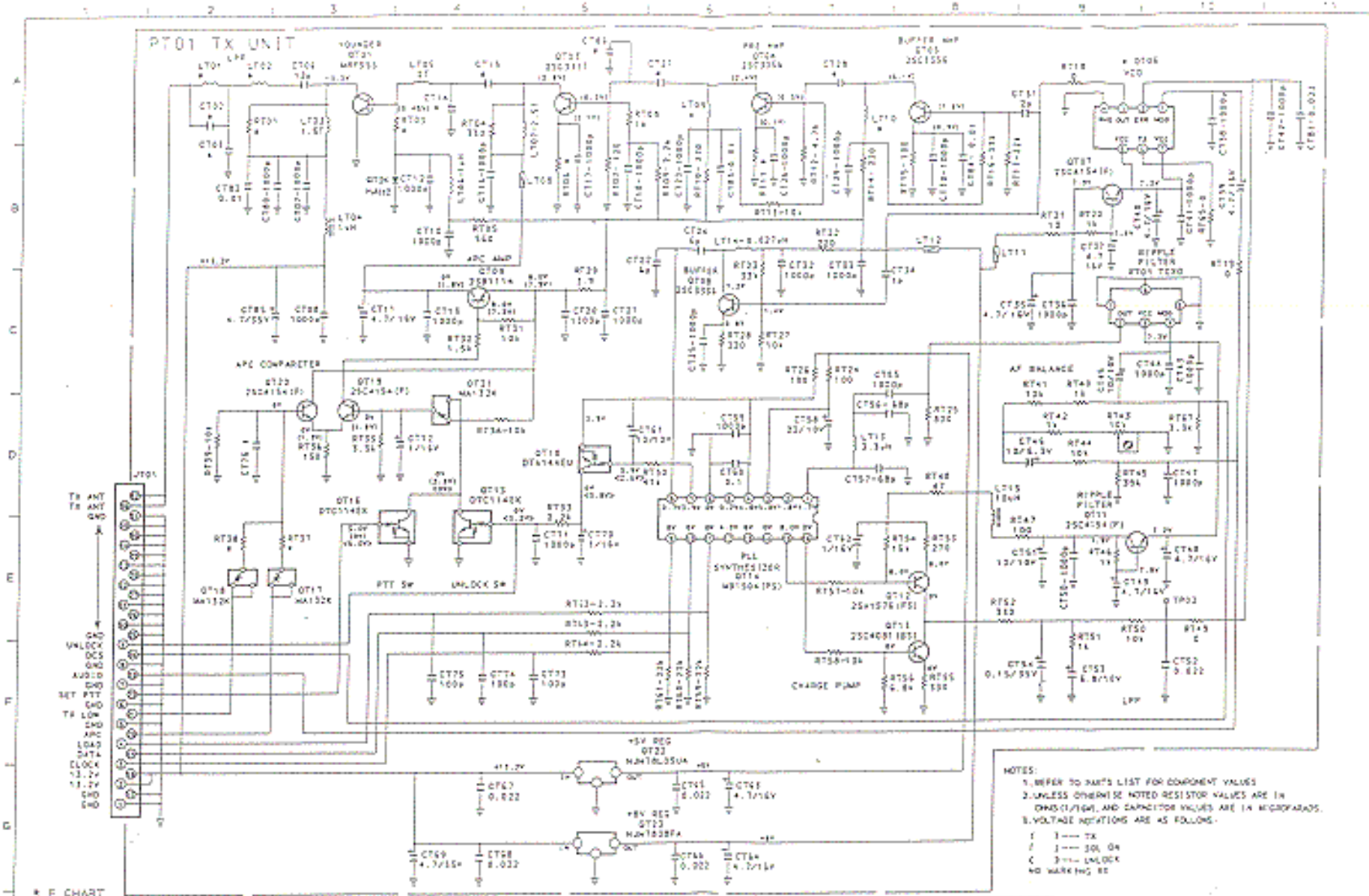

NOTES:

1. REFER TO PARTS LIST FOR COMPONENT VALUES
2. UNLESS OTHERWISE NOTED RESISTOR VALUES ARE IN OHMS (1/16W), AND CAPACITOR VALUES ARE IN MICROFARADS.
3. VOLTAGE MEASUREMENTS ARE AS FOLLOWS:

( ) --- TX
/) --- SQL ON
( ) --- UNLOCK
NO MARKING ON

* F CHART

	CT02	CT05	CT14	CT15	CT21	CT28	CT36	CT86	LT01	LT02	LT09	LT10	RT01	RT03	RT06	RT11	RT27	RT30	QT06
RPB2UMA132	1p	5p	4p	3p	7p	6p	1000p	–	1.5T	1.5T	0.015	0.015	–	100	2.2	4.7	1k	1k	K-026Y6040

YAESU MUSEN CO., LTD.
FCC ID: K66RP80U
EXHIBIT #: _____