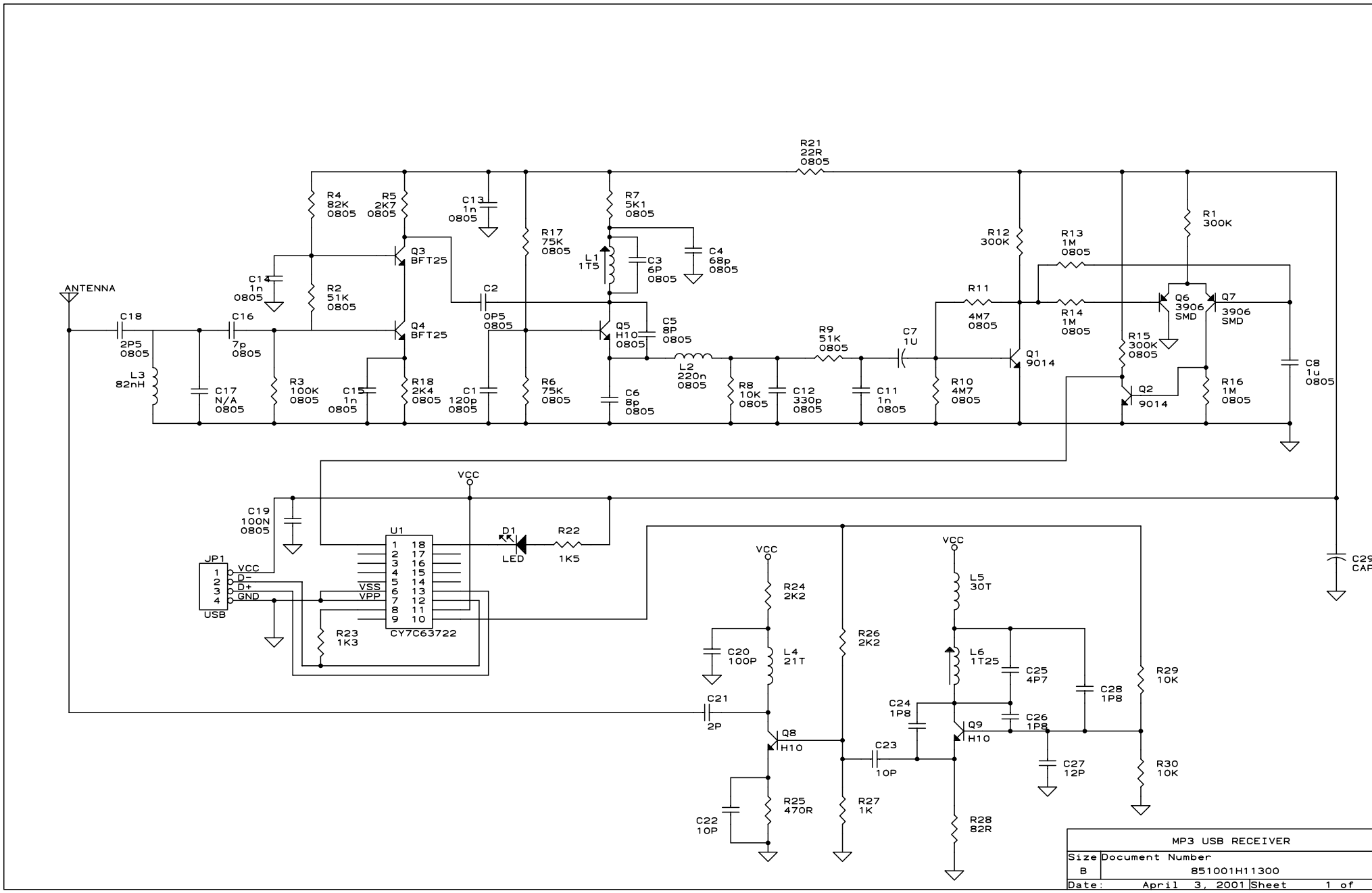

MP3 USB RECEIVER		
Size	Document Number	
B	851001H11300	
Date: April 3, 2001	Sheet 1 of	