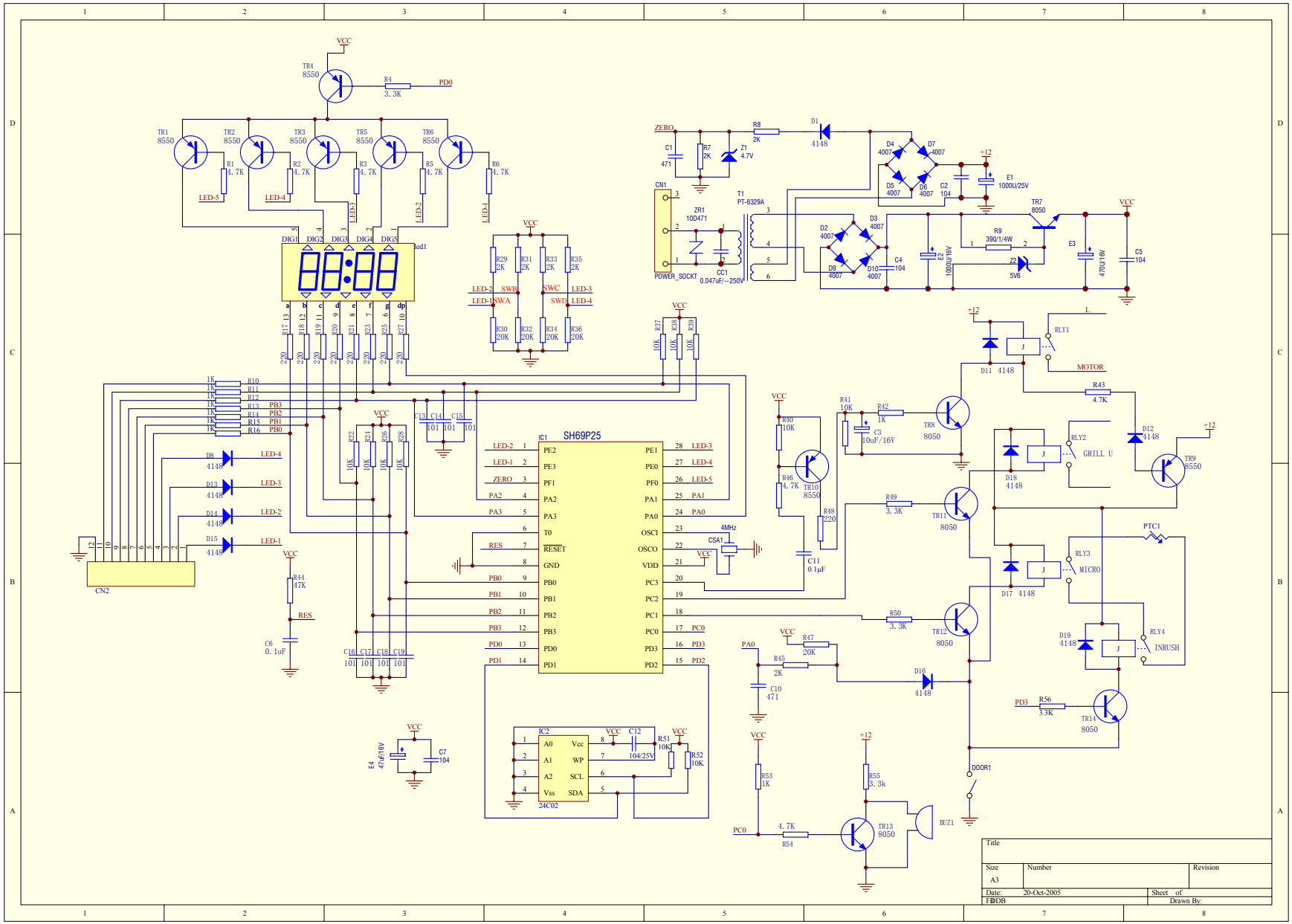
VCC
TR4 8550
R4 3.3K
PD0
TR1 8550
TR2 8550
TR3 8550
TR5 8550
TR6 8550
R1 4.7K
R2 4.7K
R3 4.7K
R5 4.7K
R6 4.7K
LED-5
LED-4
LED-3
LED-2
LED-1
DIG1 DIG2 DIG3 DIG4 DIG5
R17 R18 R19 R20 R21 R22 R23 R24 R25 R26 R27
R29 2K
R31 2K
R33 2K
R35 2K
R30 20K
R32 20K
R34 20K
R36 20K
SWA
SWB
SWC
SWD
R37 R38 R39 10K
R10 R11 R12 R13 R14 R15 R16 1K
PB3
PB2
PB1
PB0
D8 D13 D14 D15 4148
CN2
R44 47K
RES
C6 0.1uF
C13 C14 C15 101
R22 R24 R26 R28 10K
C16 C17 C18 C19 101
IC1 SH69P25
PE2 PE3 PF1 PA2 PA3 T0 RESET GND PB0 PB1 PB2 PB3 PD0 PD1
PE1 PE0 PF0 PA1 PA0 OSCI OSCO VDD PC3 PC2 PC1 PC0 PD3 PD2
CSA1 4MHz
C11 0.1uF
IC2 24C02
A0 A1 A2 Vss Vcc WP SCL SDA
C12 104/25V
R51 10K
R52 10K
E4 47uF/16V
C7 104
ZERO
C1 471
R7 2K
Z1 4.7V
R8 2K
D1 4148
CN1
POWER_SOCKT
ZR1 10D471
CC1 0.047uF/~250V
T1 PT-6329A
D2 D3 D4 D5 D6 D7 D9 D10 4007
C2 104
C4 104
E1 1000U/25V
E2 1000U/16V
R9 390/1/4W
Z2 5V6
TR7 8050
E3 470U/16V
C5 104
+12
RLY1
L
MOTOR
D11 4148
R43 4.7K
D12 4148
TR9 8550
RLY2
GRILL U
D18 4148
R40 10K
R41 10K
R42 1K
C3 10uF/16V
TR8 8050
TR10 8550
R46 4.7K
R48 220
R49 3.3K
TR11 8050
PTC1
RLY3
MICRO
D17 4148
R50 3.3K
TR12 8050
RLY4
INRUSH
D19 4148
PA0
R47 20K
R45 2K
C10 471
D16 4148
PD3
R56 3.3K
TR14 8050
R53 1K
R55 3.3k
DOOR1
PC0
R54 4.7K
TR13 8050
BUZ1
Title
Size A3
Number
Revision
Date: 20-Oct-2005
Sheet of
FILE: DB
Drawn By: