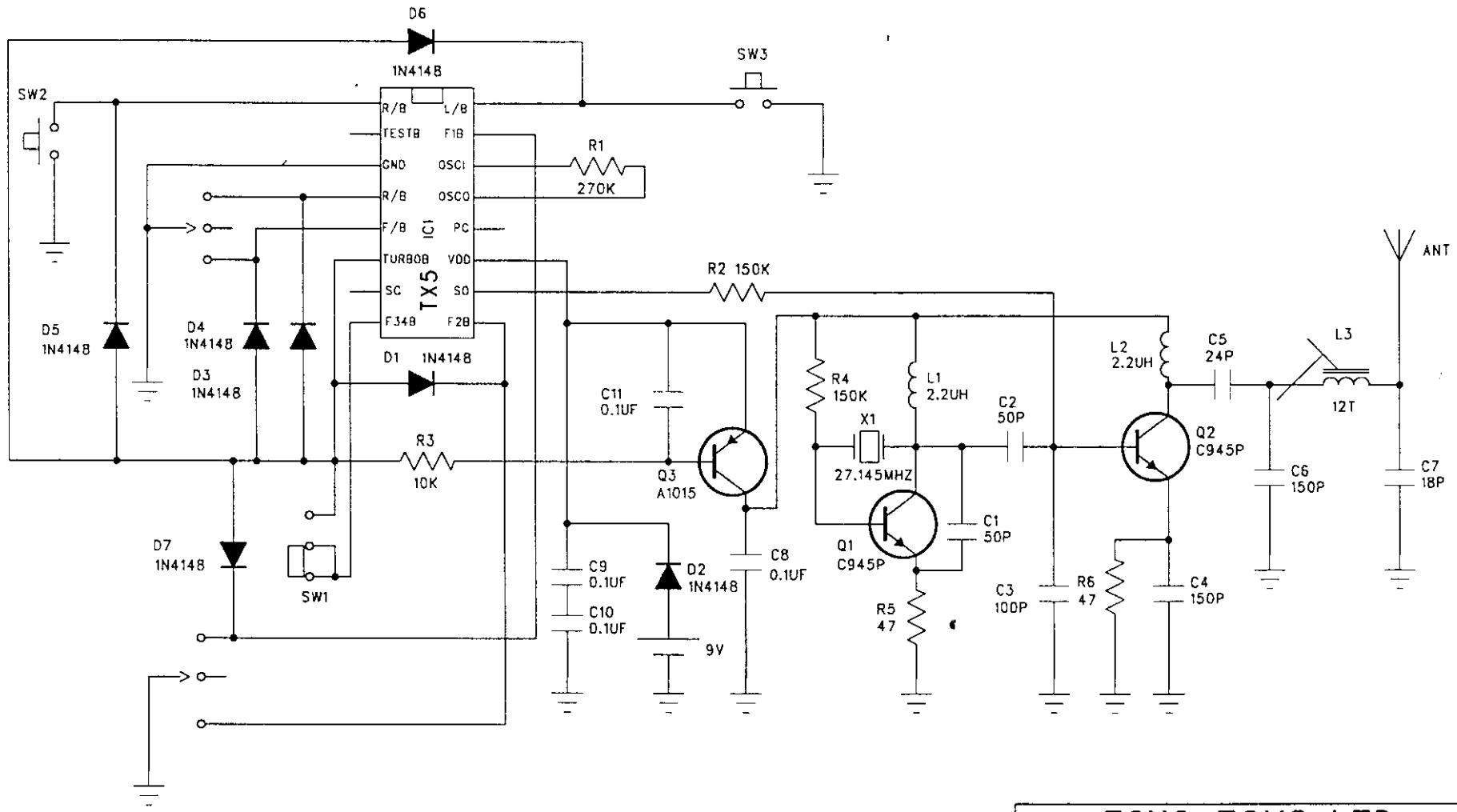

NOTE:ALL RESISTANCE VALUES ARE IN "ohm"
ALL CAPACITANCE VALUES ARE IN "UF"

* MYLAR

ECHO TOYS LTD	
MODEL	8809T-27
DWG NO	
DESIGNER	
DATE	12 APRIL 98