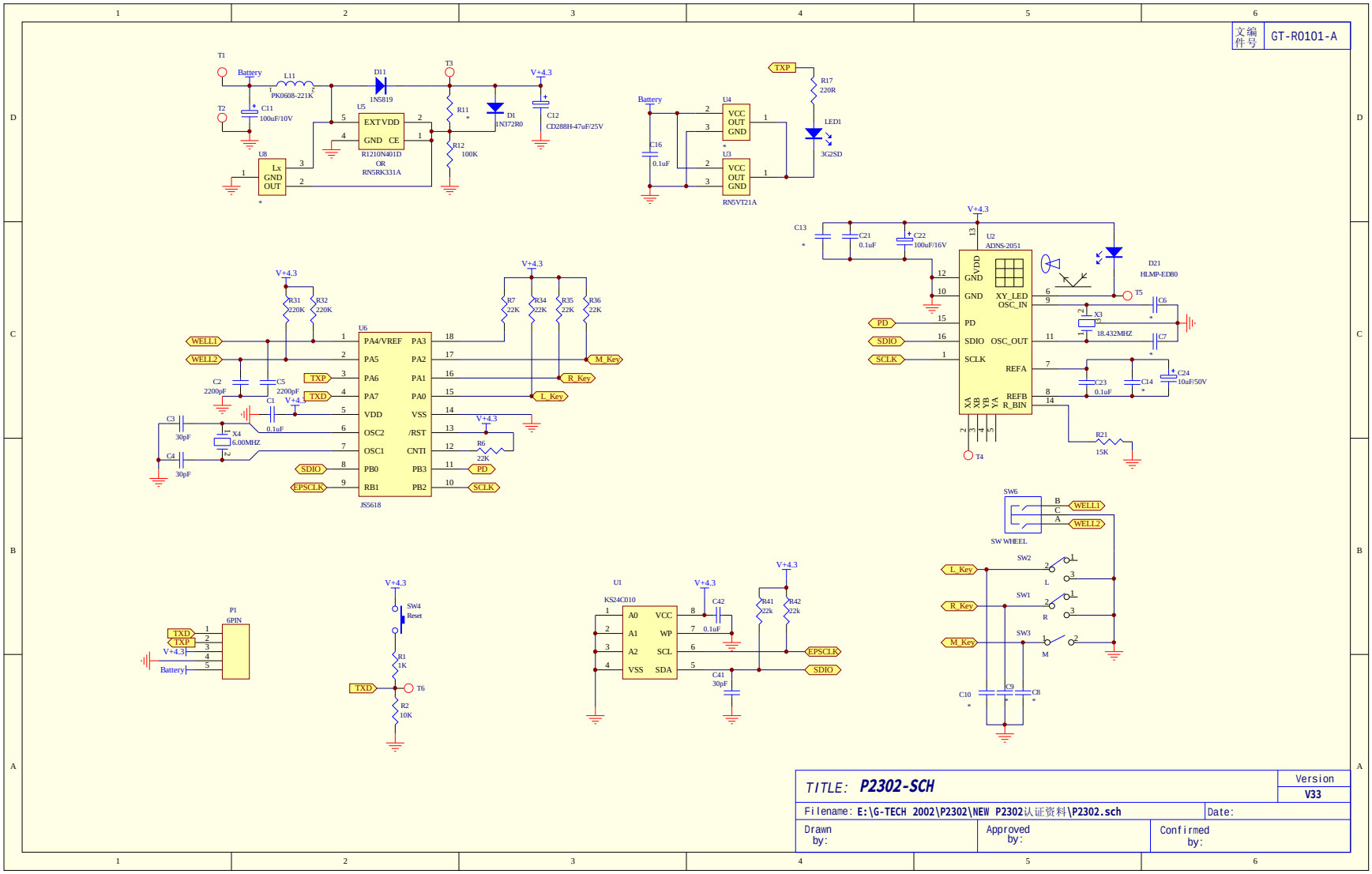


| | |
|---|---|
| TITLE: P2302-SCH | Version V33 |
| Filename: E:\G-TECH 2002\P2302\NEW P2302认证资料\P2302.sch | Date: |
| Drawn by: | Approved by: / Confirmed by: |

PDF created with FinePrint pdfFactory trial version http://www.fineprint.com