| REVISIONS | | | | |
|---|---|---|---|---|
| ZONE | LTR | DESCRIPTION | DATE | APPR. |
| | | | | |

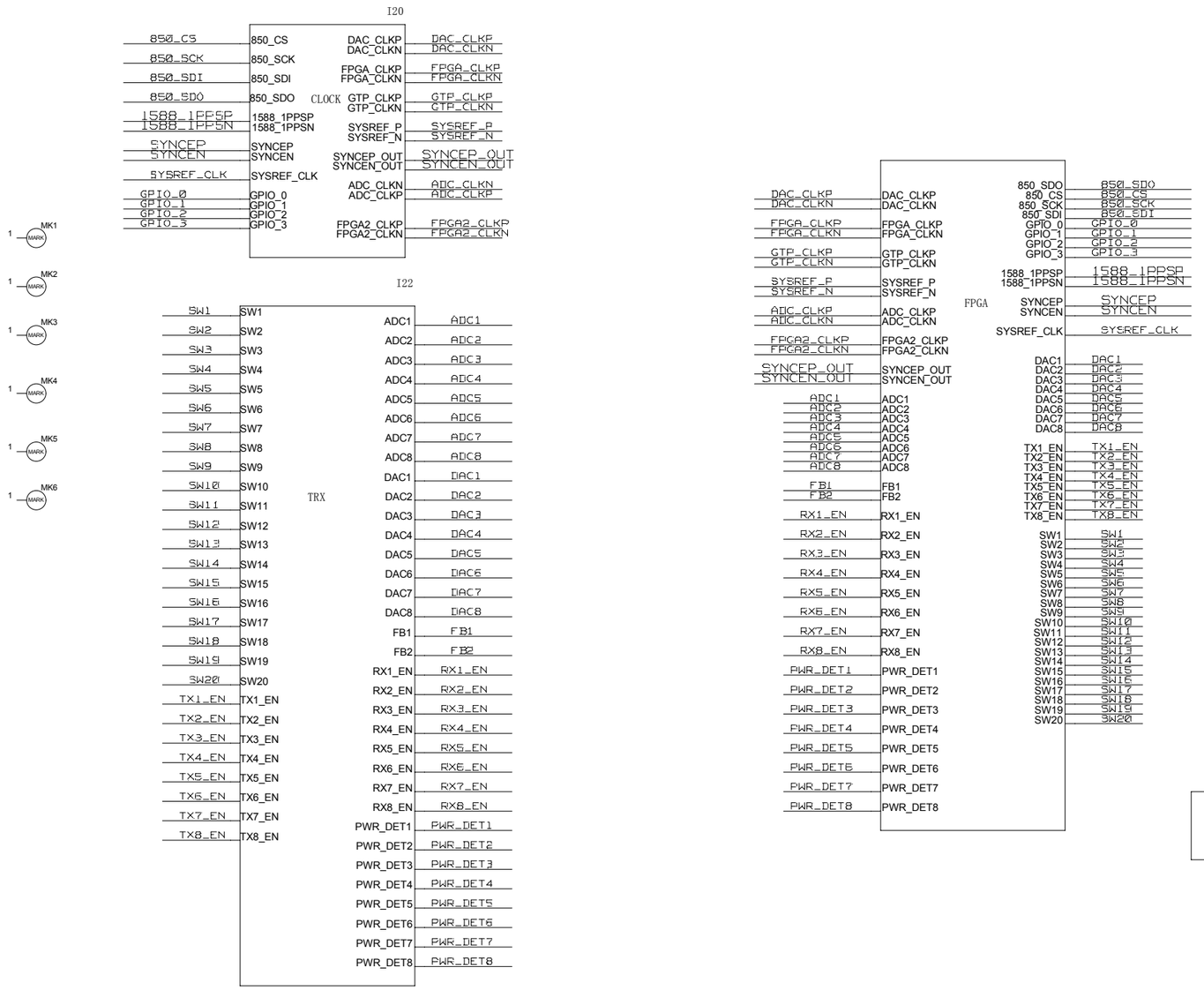


CADENCE DESIGN SYSTEMS, INC.

CADENCE

THIS DOCUMENT CONTAINS INFORMATION PROPRIETARY
TO CADENCE DESIGN SYSTEMS INC (CADENCE). USE
OR DISCLOSURE WITHOUT THE WRITTEN PERMISSION OF AN
OFFICER OF CADENCE IS EXPRESSLY FORBIDDEN.
COPYRIGHT (C) CADENCE 1988

DRAWING TITLE

SIZE C | REV. | DRAWING NO.

SCALE | SHEET OF

| REVISIONS | | | | |
|---|---|---|---|---|
| ZONE | LTR | DESCRIPTION | DATE | APPR. |
| | | | | |

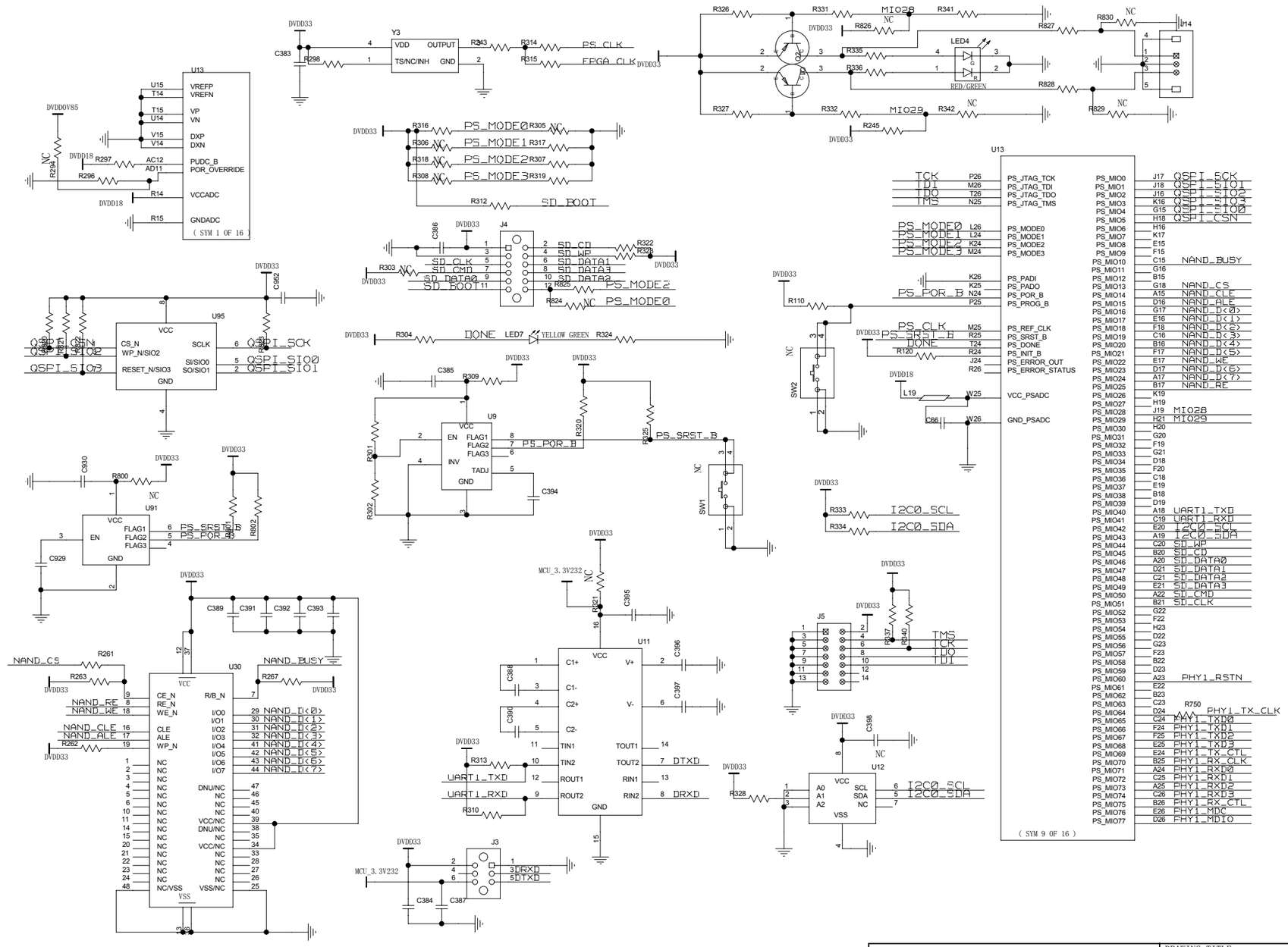


CADENCE DESIGN SYSTEMS, INC.

CADENCE

THIS DOCUMENT CONTAINS INFORMATION PROPRIETARY TO CADENCE DESIGN SYSTEMS INC (CADENCE). USE OR DISCLOSURE WITHOUT THE WRITTEN PERMISSION OF AN OFFICER OF CADENCE IS EXPRESSLY FORBIDDEN. COPYRIGHT (C) CADENCE 1988

DRAWING TITLE

| SIZE | REV. | DRAWING NO. |
|---|---|---|
| C | | |

SCALE | SHEET OF

| REVISIONS | | | | |
|---|---|---|---|---|
| ZONE | LTR | DESCRIPTION | DATE | APPR. |
| | | | | |

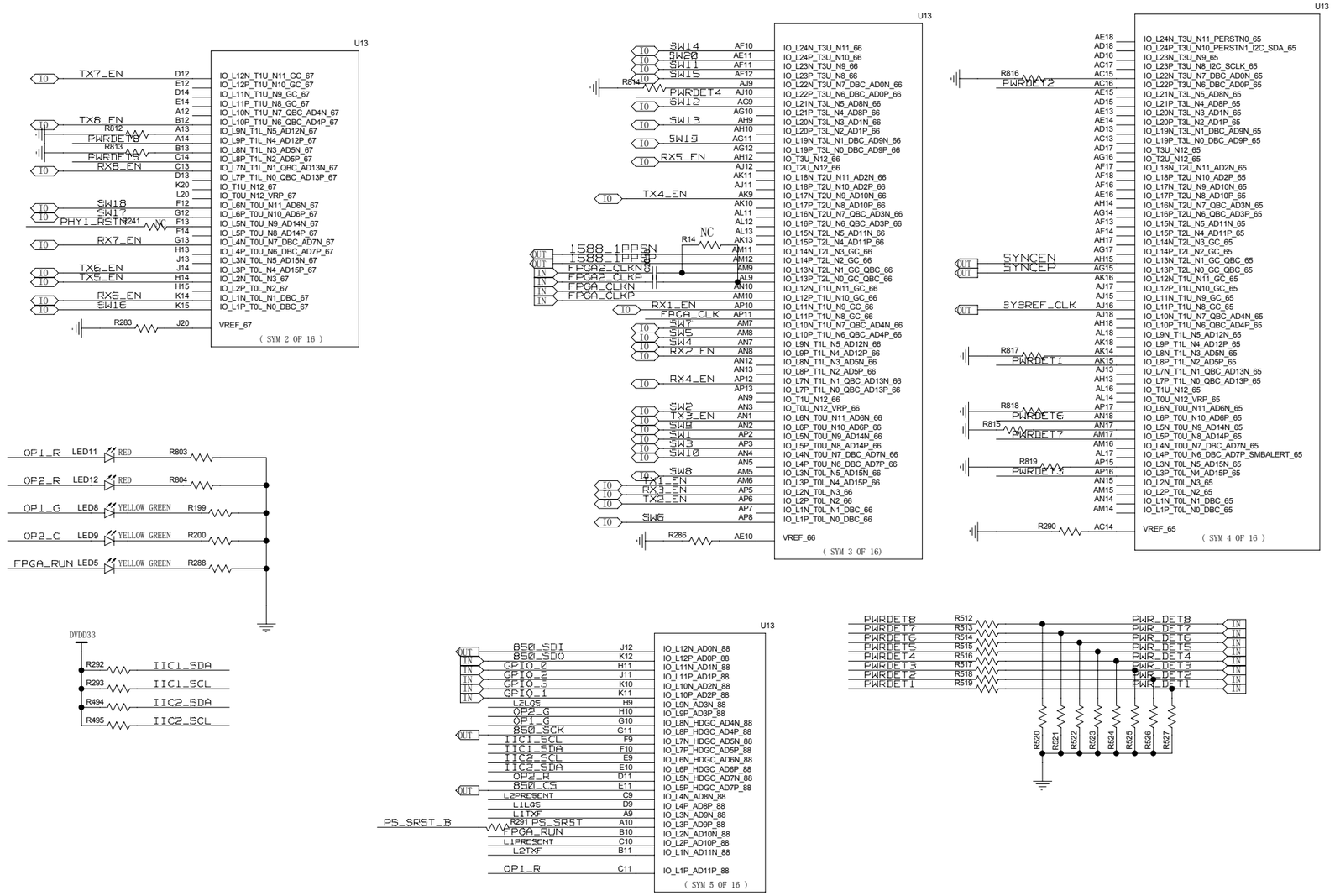


CADENCE DESIGN SYSTEMS, INC.

CADENCE

THIS DOCUMENT CONTAINS INFORMATION PROPRIETARY TO CADENCE DESIGN SYSTEMS INC (CADENCE). USE OR DISCLOSURE WITHOUT THE WRITTEN PERMISSION OF AN OFFICER OF CADENCE IS EXPRESSLY FORBIDDEN. COPYRIGHT (C) CADENCE 1988

DRAWING TITLE

SIZE C | REV. | DRAWING NO.

SCALE | SHEET OF

| REVISIONS | | | | |
|---|---|---|---|---|
| ZONE | LTR | DESCRIPTION | DATE | APPR. |
| | | | | |

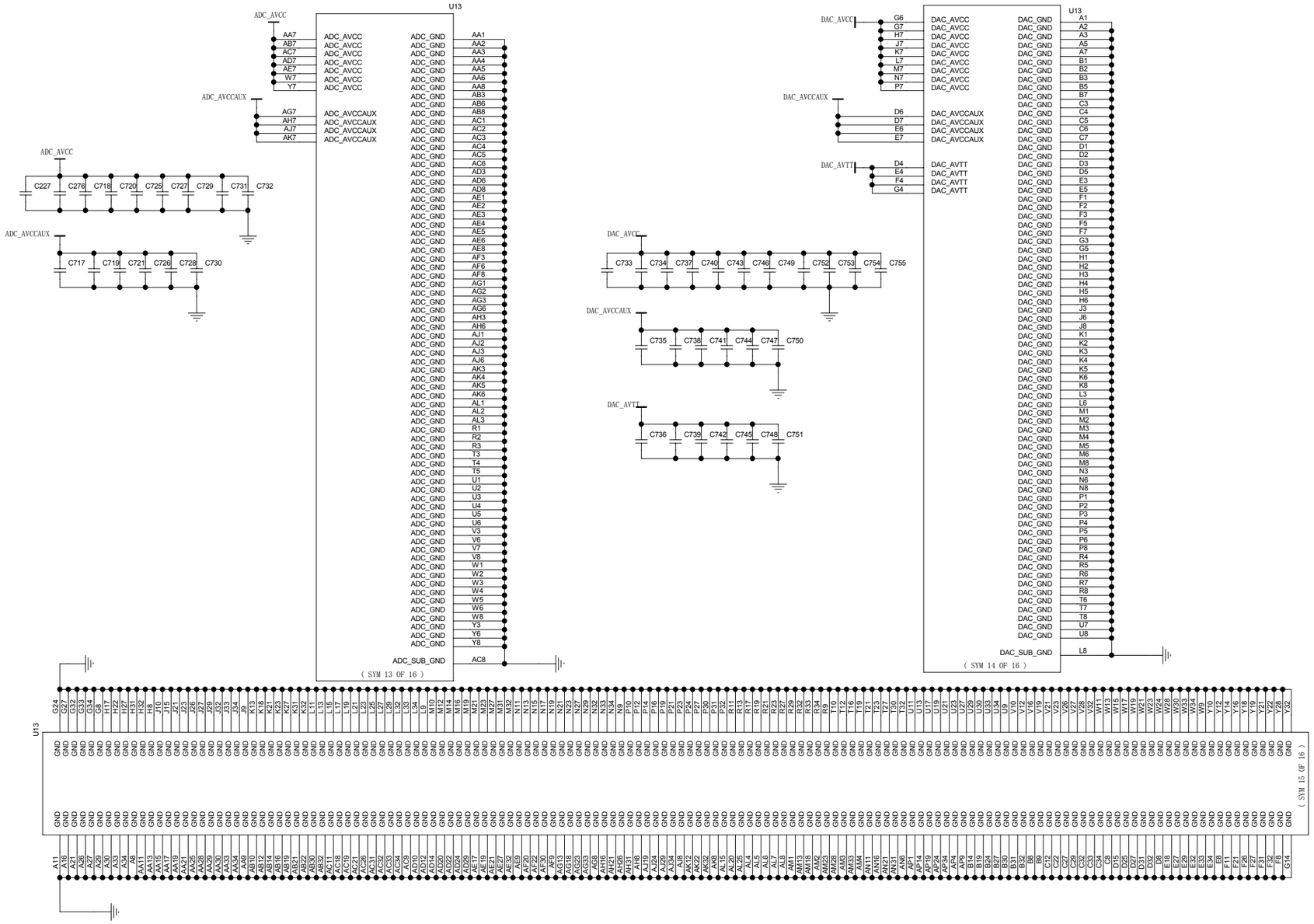


CADENCE DESIGN SYSTEMS, INC.

CADENCE

THIS DOCUMENT CONTAINS INFORMATION PROPRIETARY TO CADENCE DESIGN SYSTEMS INC (CADENCE). USE OR DISCLOSURE WITHOUT THE WRITTEN PERMISSION OF AN OFFICER OF CADENCE IS EXPRESSLY FORBIDDEN. COPYRIGHT (C) CADENCE 1988

DRAWING TITLE

| SIZE | REV. | DRAWING NO. |
|---|---|---|
| C | | |
| SCALE | | SHEET OF |

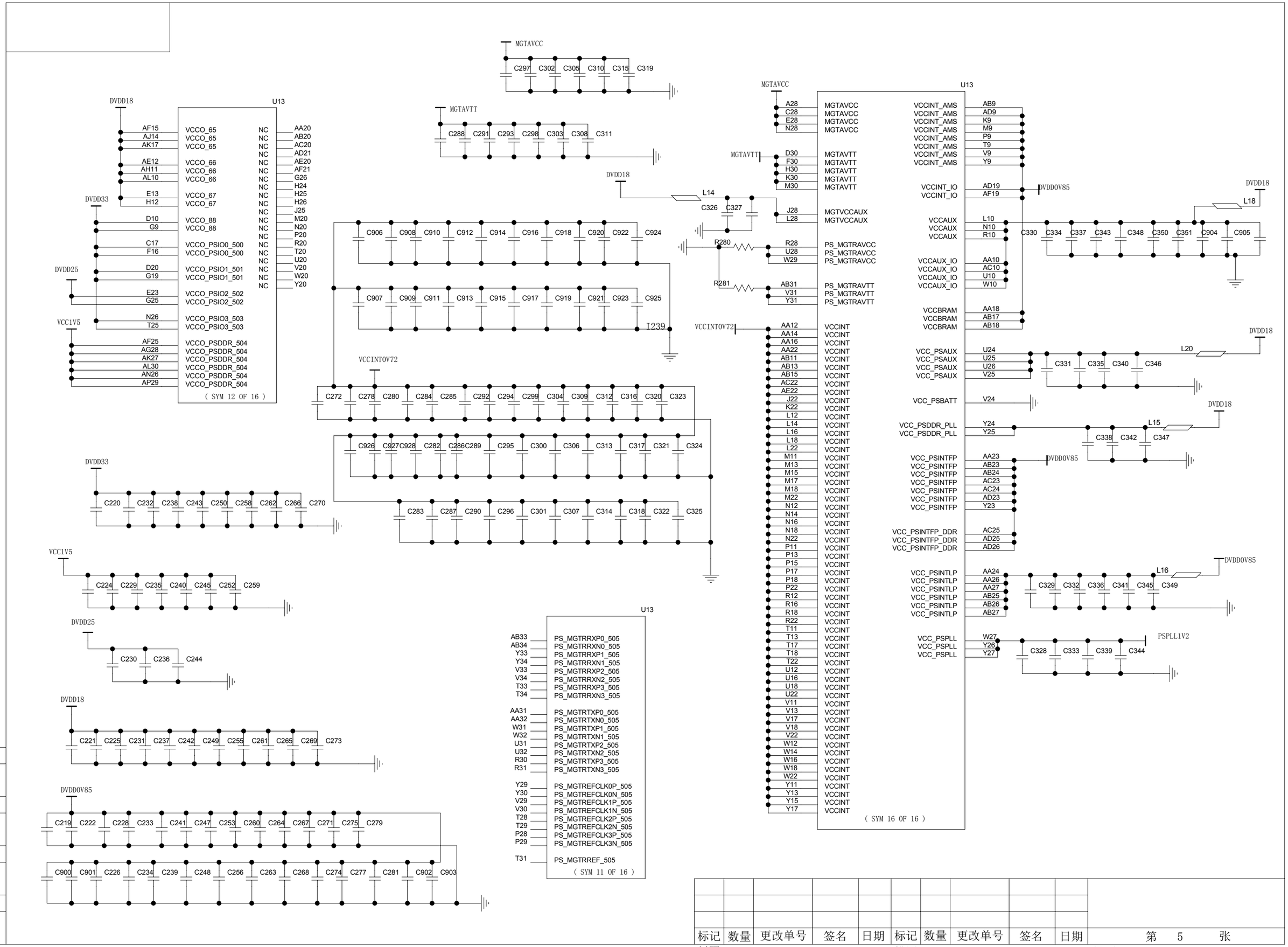


| 媒体编号 | |
|---|---|
| | |
| 旧底图总号 | |
| | |
| 底图总号 | |
| | |
| 日期 | 签名 |

| 标记 | 数量 | 更改单号 | 签名 | 日期 | 标记 | 数量 | 更改单号 | 签名 | 日期 | 第 5 张 |
|---|---|---|---|---|---|---|---|---|---|---|

格式（3a） 制图： 描图： 幅面：

| REVISIONS | | | | |
|---|---|---|---|---|
| ZONE | LTR | DESCRIPTION | DATE | APPR. |
| | | | | |

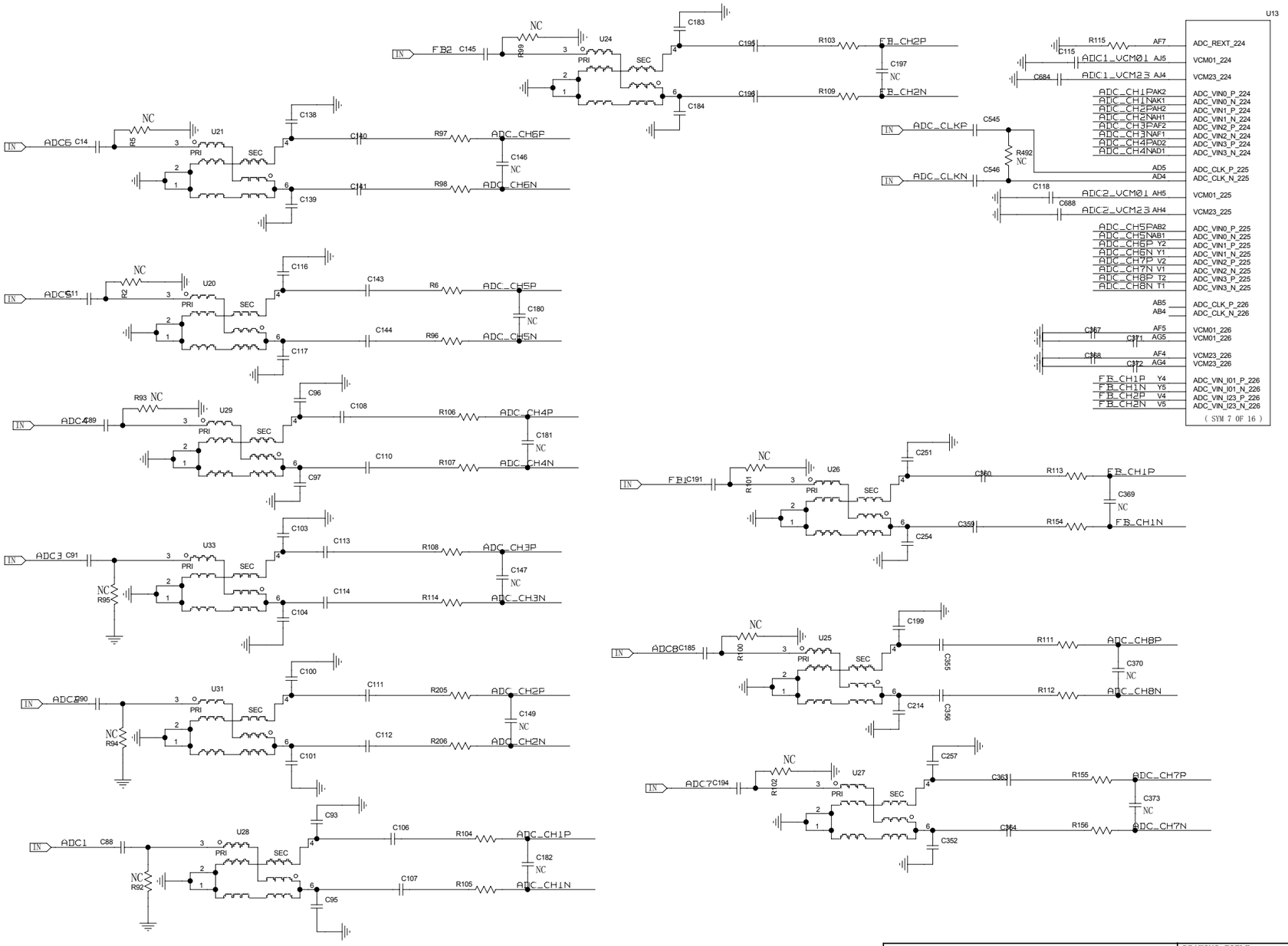


CADENCE DESIGN SYSTEMS, INC.

CADENCE

THIS DOCUMENT CONTAINS INFORMATION PROPRIETARY TO CADENCE DESIGN SYSTEMS INC (CADENCE). USE OR DISCLOSURE WITHOUT THE WRITTEN PERMISSION OF AN OFFICER OF CADENCE IS EXPRESSLY FORBIDDEN. COPYRIGHT (C) CADENCE 1988

DRAWING TITLE

SIZE C | REV. | DRAWING NO.

SCALE | SHEET OF

| REVISIONS | | | | |
|---|---|---|---|---|
| ZONE | LTR | DESCRIPTION | DATE | APPR. |
| | | | | |

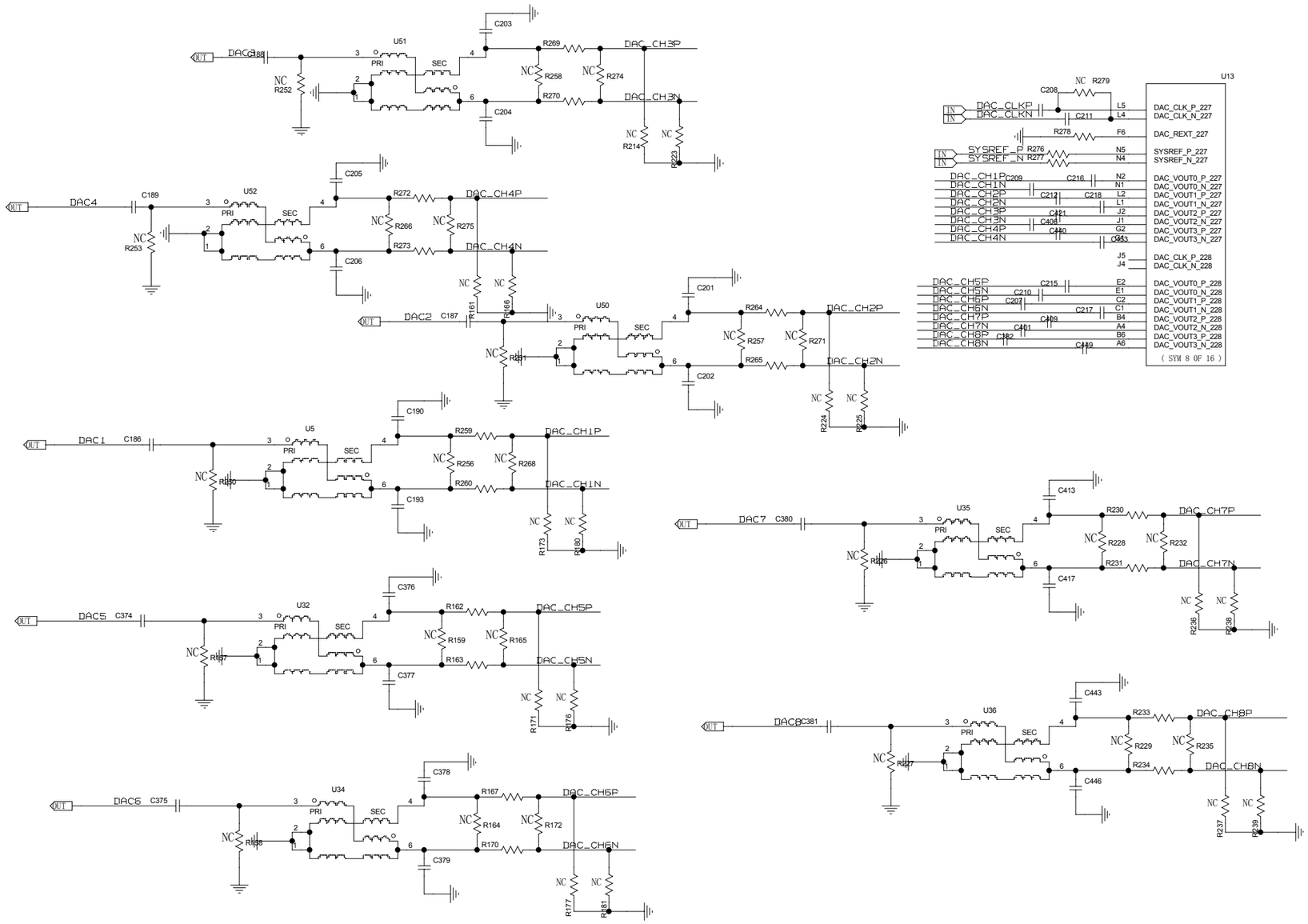


CADENCE DESIGN SYSTEMS, INC.

CADENCE

THIS DOCUMENT CONTAINS INFORMATION PROPRIETARY TO CADENCE DESIGN SYSTEMS INC (CADENCE). USE OR DISCLOSURE WITHOUT THE WRITTEN PERMISSION OF AN OFFICER OF CADENCE IS EXPRESSLY FORBIDDEN. COPYRIGHT (C) CADENCE 1988

DRAWING TITLE

| SIZE | REV. | DRAWING NO. |
|---|---|---|
| C | | |
| SCALE | | SHEET OF |

| REVISIONS | | | | |
|---|---|---|---|---|
| ZONE | LTR | DESCRIPTION | DATE | APPR. |
| | | | | |

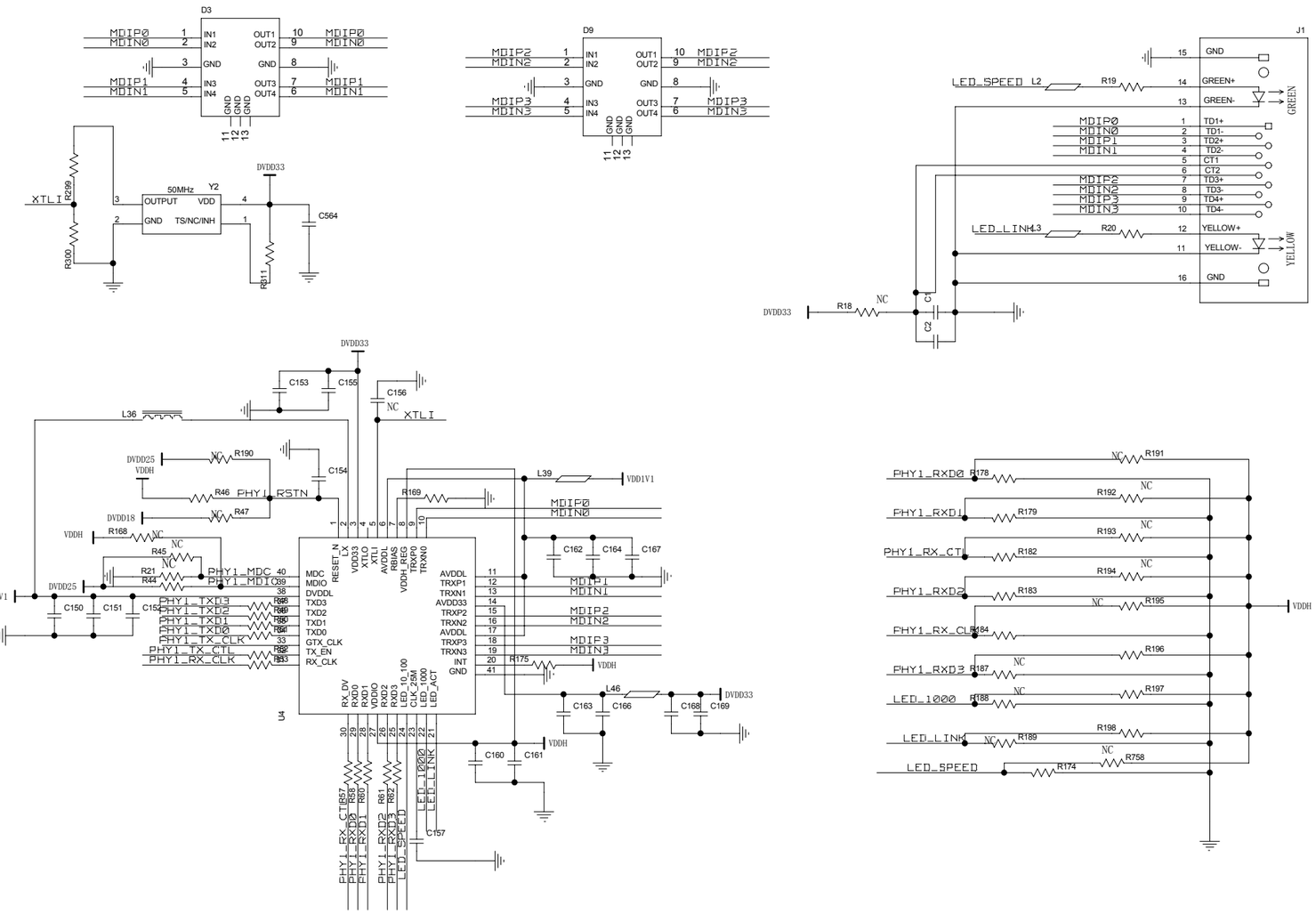


CADENCE DESIGN SYSTEMS, INC.

CADENCE

THIS DOCUMENT CONTAINS INFORMATION PROPRIETARY TO CADENCE DESIGN SYSTEMS INC (CADENCE). USE OR DISCLOSURE WITHOUT THE WRITTEN PERMISSION OF AN OFFICER OF CADENCE IS EXPRESSLY FORBIDDEN. COPYRIGHT (C) CADENCE 1988

DRAWING TITLE

| SIZE | REV. | DRAWING NO. |
|---|---|---|
| C | | |
| SCALE | | SHEET OF |

| REVISIONS | | | | |
|---|---|---|---|---|
| ZONE | LTR | DESCRIPTION | DATE | APPR. |
| | | | | |

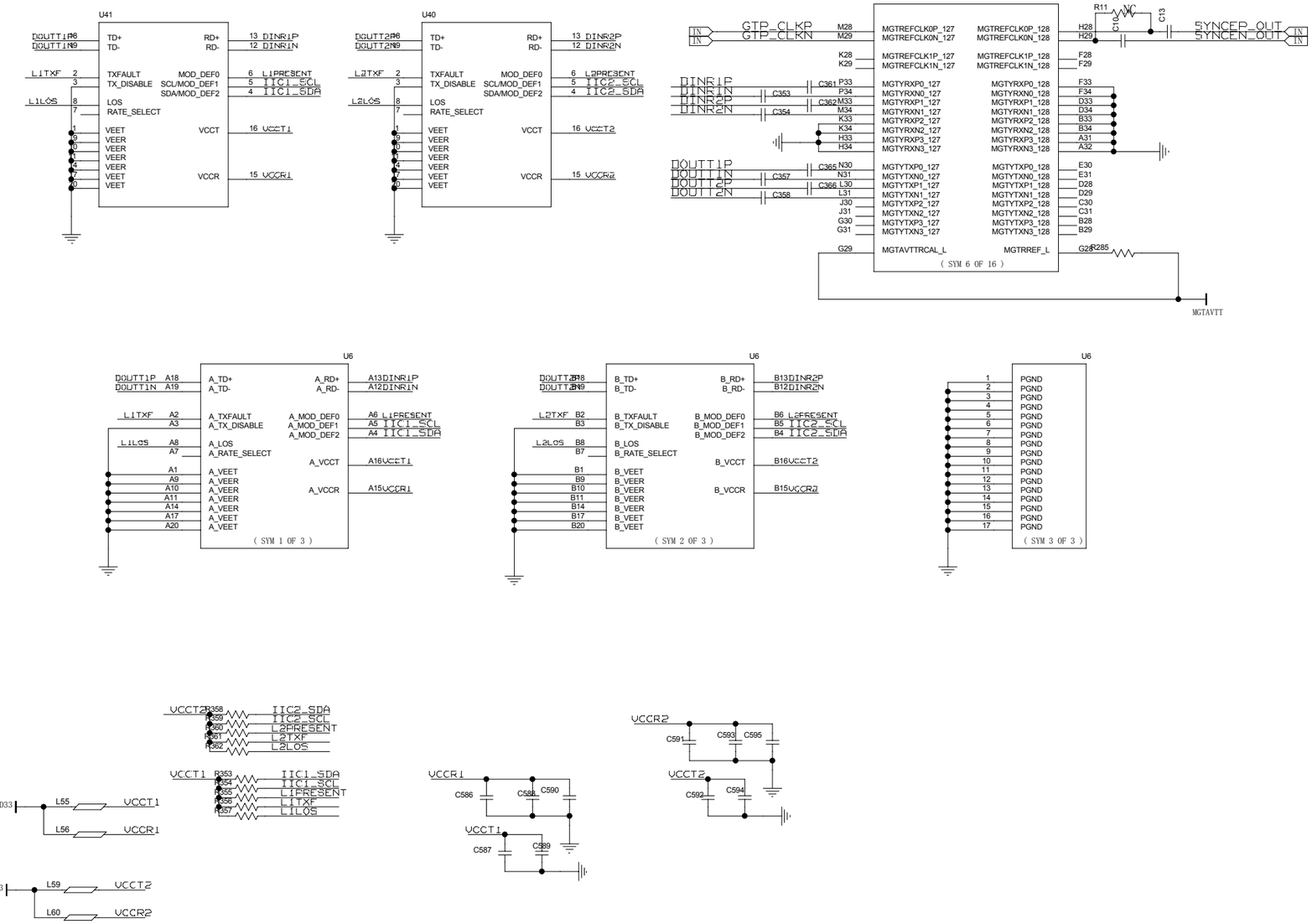


CADENCE DESIGN SYSTEMS, INC.

CADENCE

THIS DOCUMENT CONTAINS INFORMATION PROPRIETARY TO CADENCE DESIGN SYSTEMS INC (CADENCE). USE OR DISCLOSURE WITHOUT THE WRITTEN PERMISSION OF AN OFFICER OF CADENCE IS EXPRESSLY FORBIDDEN. COPYRIGHT (C) CADENCE 1988

DRAWING TITLE

SIZE C | REV. | DRAWING NO.

SCALE | SHEET OF

| REVISIONS | | | | |
|---|---|---|---|---|
| ZONE | LTR | DESCRIPTION | DATE | APPR. |
| | | | | |

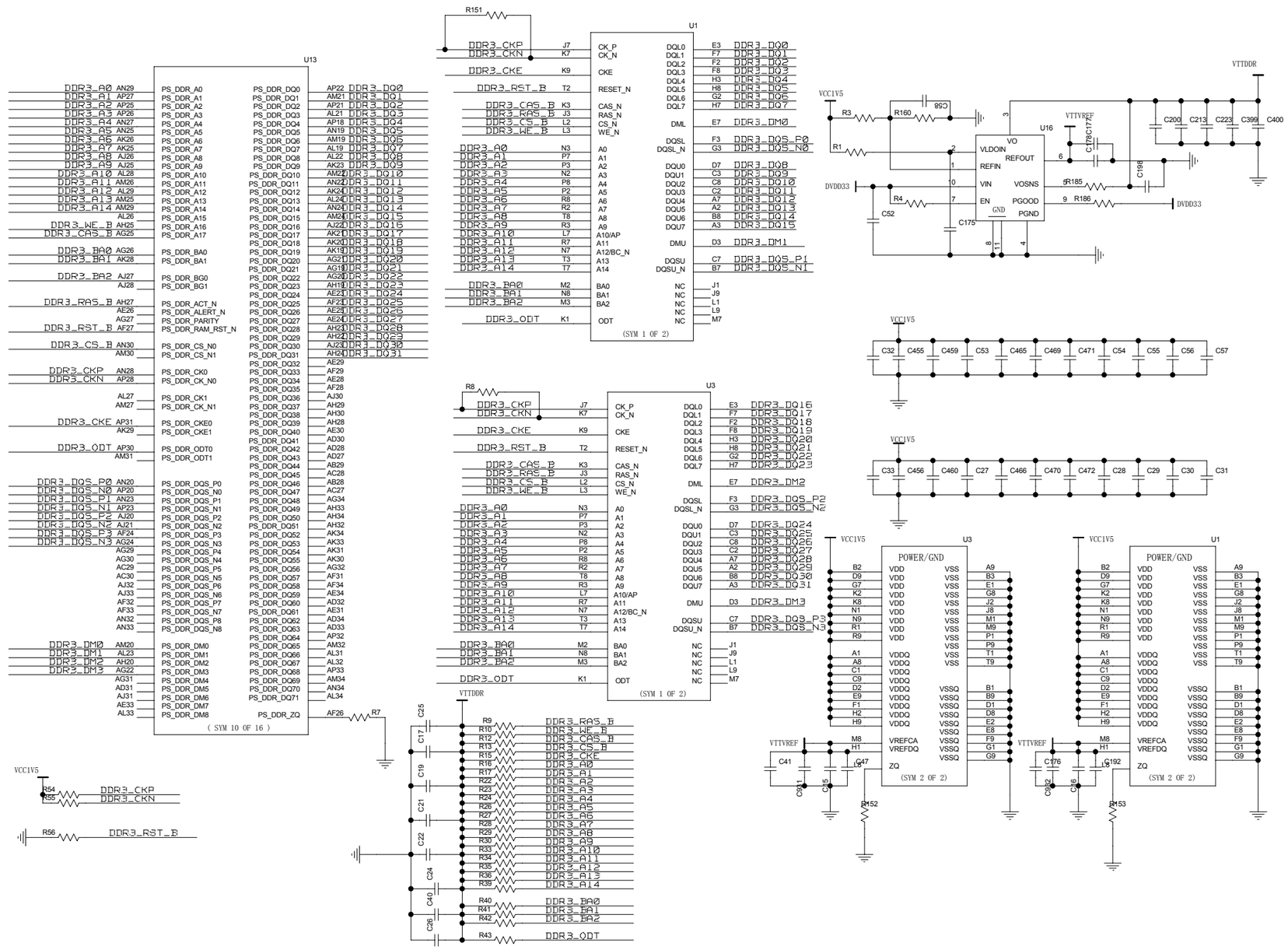


CADENCE DESIGN SYSTEMS, INC.

CADENCE

THIS DOCUMENT CONTAINS INFORMATION PROPRIETARY TO CADENCE DESIGN SYSTEMS INC (CADENCE). USE OR DISCLOSURE WITHOUT THE WRITTEN PERMISSION OF AN OFFICER OF CADENCE IS EXPRESSLY FORBIDDEN. COPYRIGHT (C) CADENCE 1988

DRAWING TITLE

| SIZE | REV. | DRAWING NO. |
|---|---|---|
| C | | |

SCALE | SHEET OF

| REVISIONS | | | | |
|---|---|---|---|---|
| ZONE | LTR | DESCRIPTION | DATE | APPR. |
| | | | | |

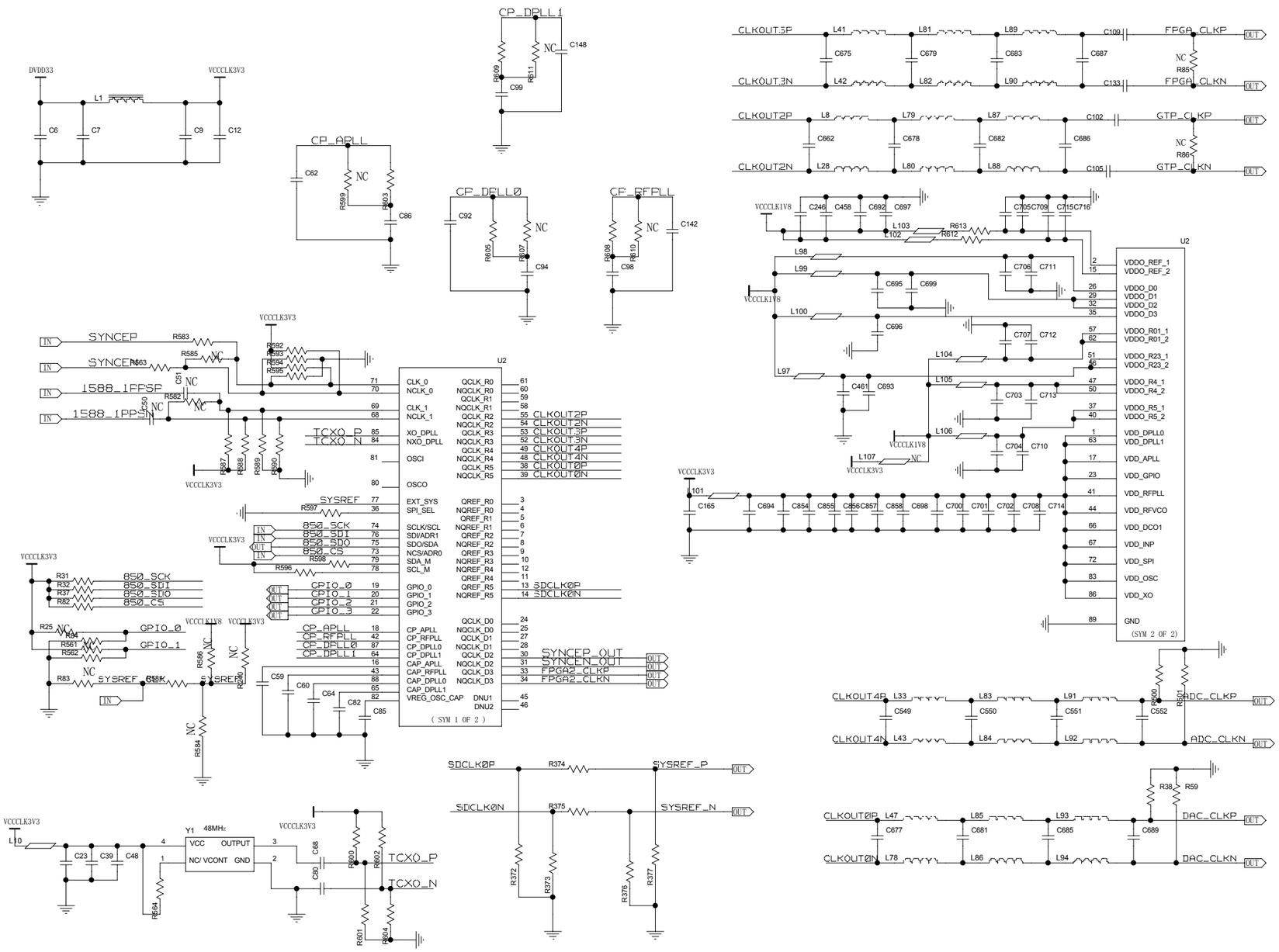


CADENCE DESIGN SYSTEMS, INC.

CADENCE

THIS DOCUMENT CONTAINS INFORMATION PROPRIETARY TO CADENCE DESIGN SYSTEMS INC (CADENCE). USE OR DISCLOSURE WITHOUT THE WRITTEN PERMISSION OF AN OFFICER OF CADENCE IS EXPRESSLY FORBIDDEN. COPYRIGHT (C) CADENCE 1988

DRAWING TITLE

SIZE C | REV. | DRAWING NO.

SCALE | SHEET OF

| REVISIONS | | | | |
|---|---|---|---|---|
| ZONE | LTR | DESCRIPTION | DATE | APPR. |
| | | | | |

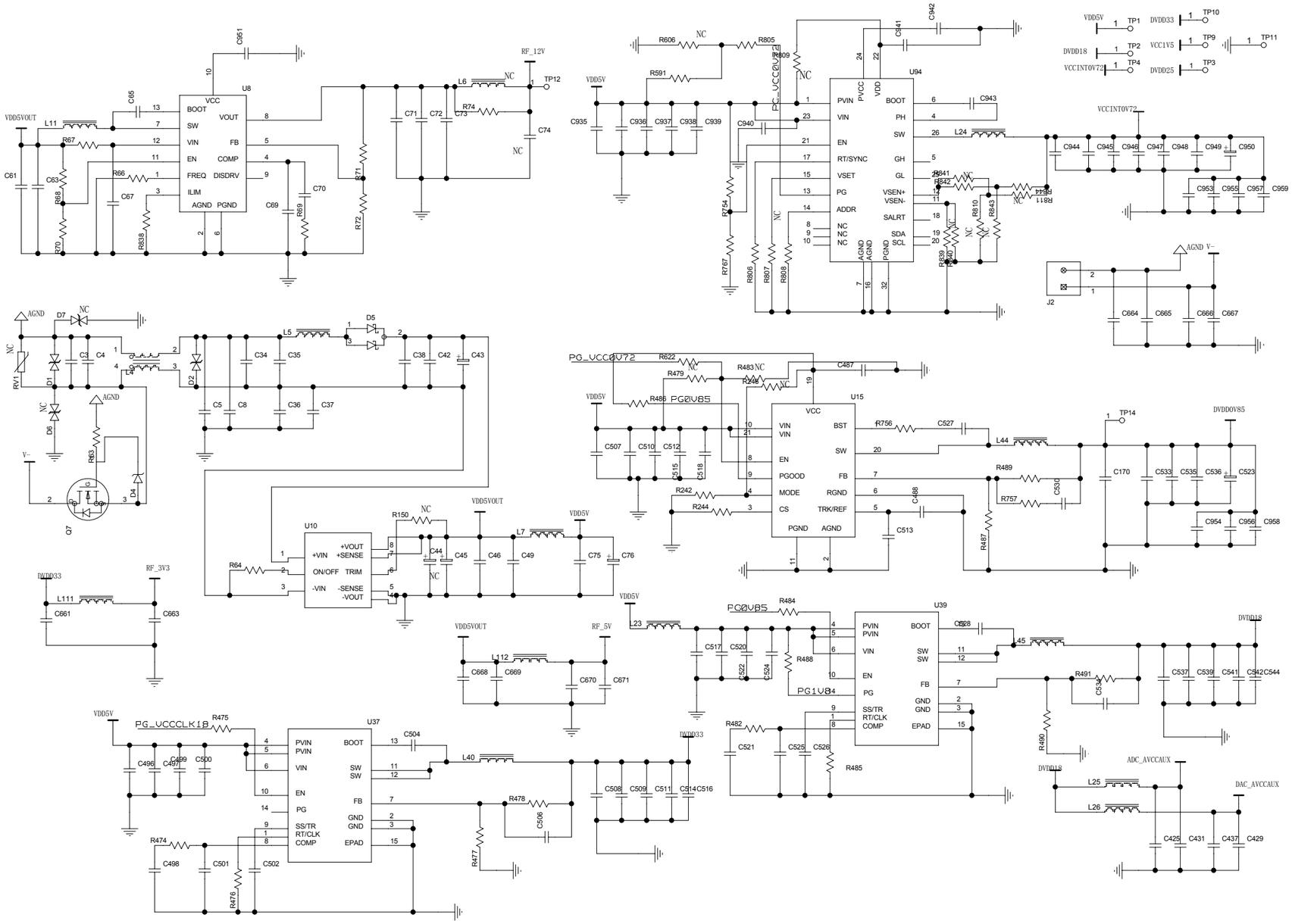


CADENCE DESIGN SYSTEMS, INC.

CADENCE

THIS DOCUMENT CONTAINS INFORMATION PROPRIETARY TO CADENCE DESIGN SYSTEMS INC (CADENCE). USE OR DISCLOSURE WITHOUT THE WRITTEN PERMISSION OF AN OFFICER OF CADENCE IS EXPRESSLY FORBIDDEN. COPYRIGHT (C) CADENCE 1988

DRAWING TITLE

| SIZE | REV. | DRAWING NO. |
|---|---|---|
| C | | |

SCALE | SHEET OF

| REVISIONS | | | | |
|---|---|---|---|---|
| ZONE | LTR | DESCRIPTION | DATE | APPR. |
| | | | | |

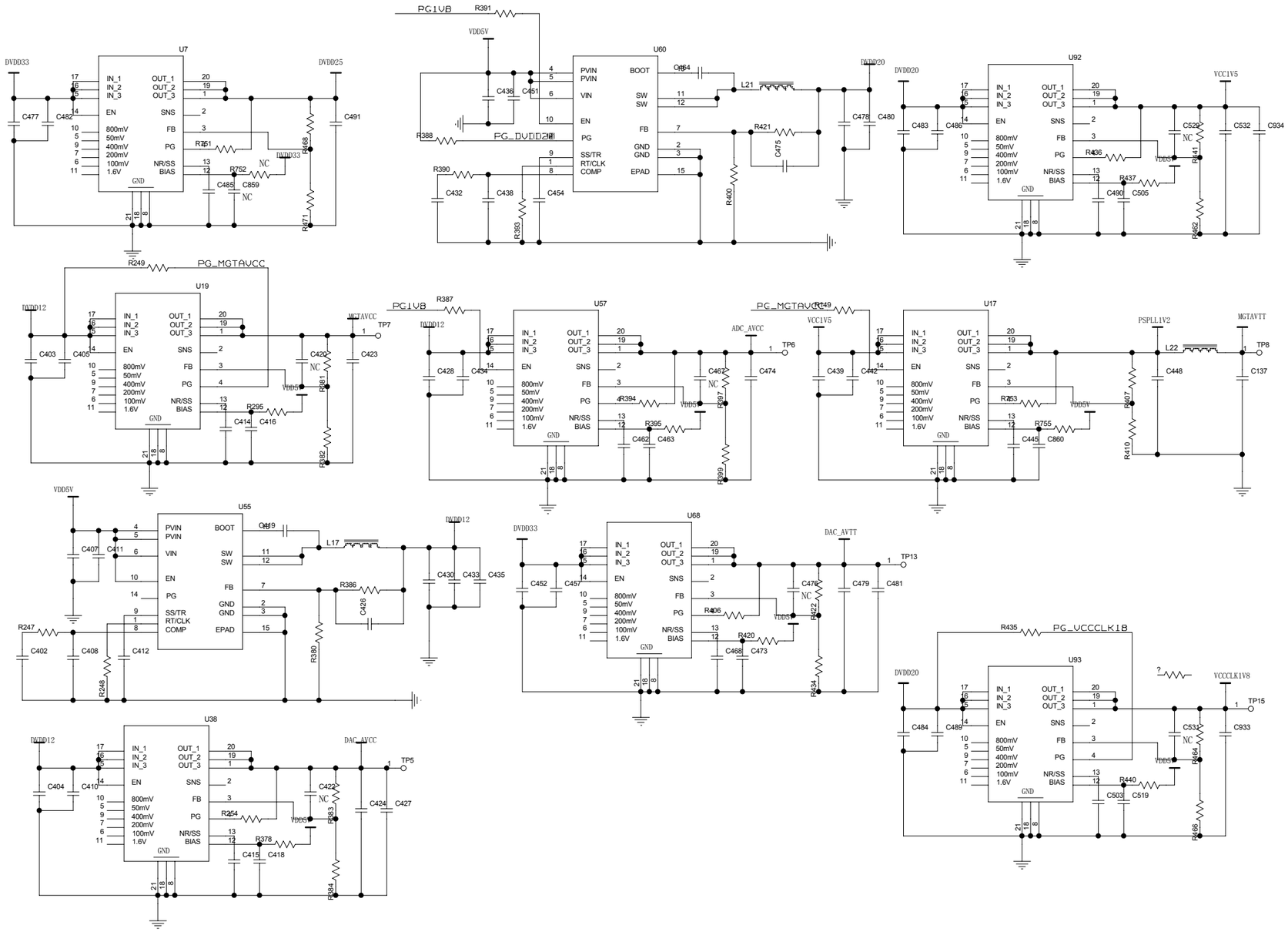


CADENCE DESIGN SYSTEMS, INC.

CADENCE

THIS DOCUMENT CONTAINS INFORMATION PROPRIETARY TO CADENCE DESIGN SYSTEMS INC (CADENCE). USE OR DISCLOSURE WITHOUT THE WRITTEN PERMISSION OF AN OFFICER OF CADENCE IS EXPRESSLY FORBIDDEN. COPYRIGHT (C) CADENCE 1988

DRAWING TITLE

| SIZE | REV. | DRAWING NO. |
|---|---|---|
| C | | |

SCALE | SHEET OF

| REVISIONS | | | | |
|---|---|---|---|---|
| ZONE | LTR | DESCRIPTION | DATE | APPR. |
| | | | | |

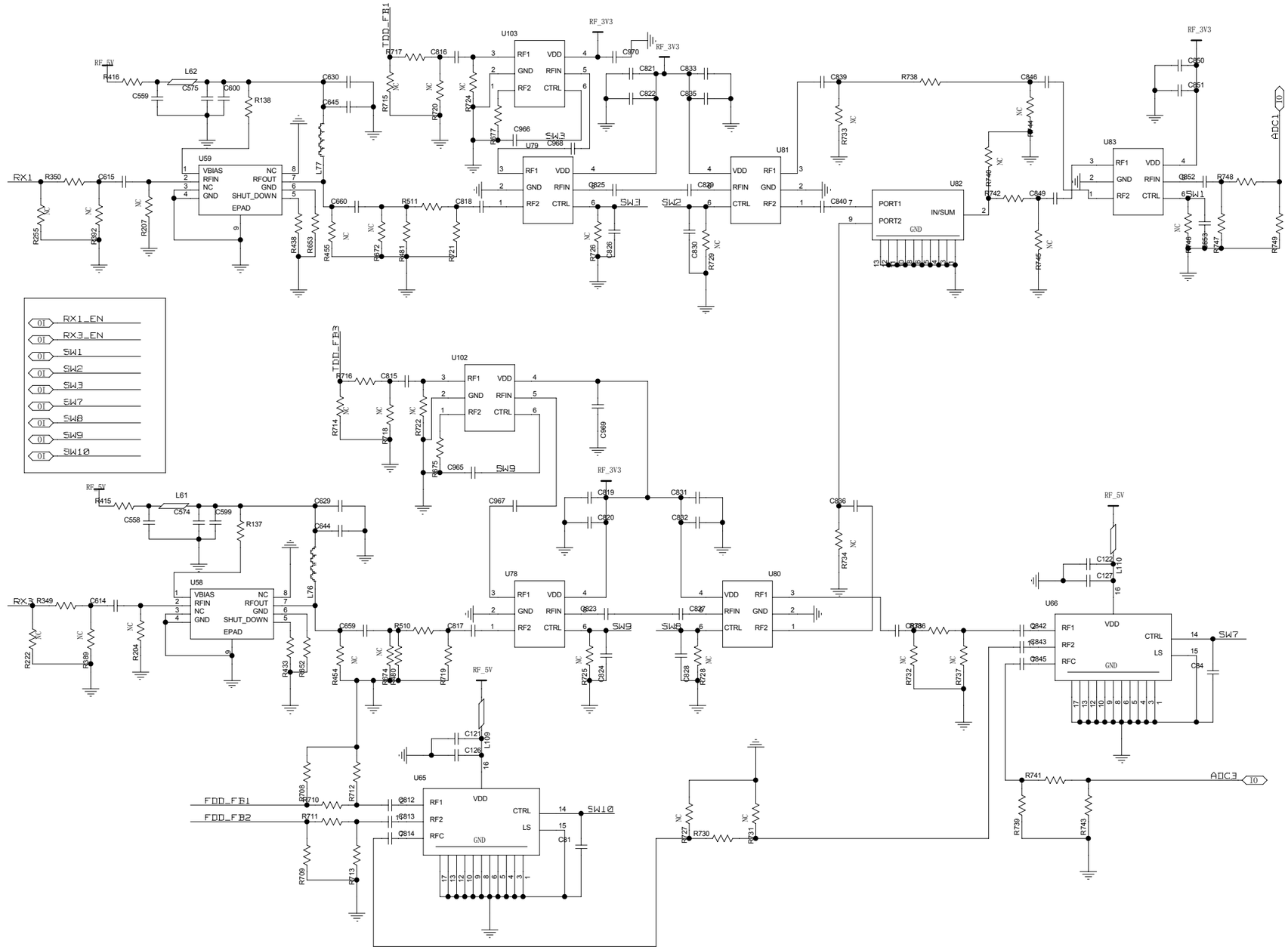


CADENCE DESIGN SYSTEMS, INC.

CADENCE

THIS DOCUMENT CONTAINS INFORMATION PROPRIETARY TO CADENCE DESIGN SYSTEMS INC (CADENCE). USE OR DISCLOSURE WITHOUT THE WRITTEN PERMISSION OF AN OFFICER OF CADENCE IS EXPRESSLY FORBIDDEN. COPYRIGHT (C) CADENCE 1988

DRAWING TITLE

| SIZE | REV. | DRAWING NO. |
|---|---|---|
| C | | |
| SCALE | | SHEET OF |

| REVISIONS | | | | |
|---|---|---|---|---|
| ZONE | LTR | DESCRIPTION | DATE | APPR. |
| | | | | |

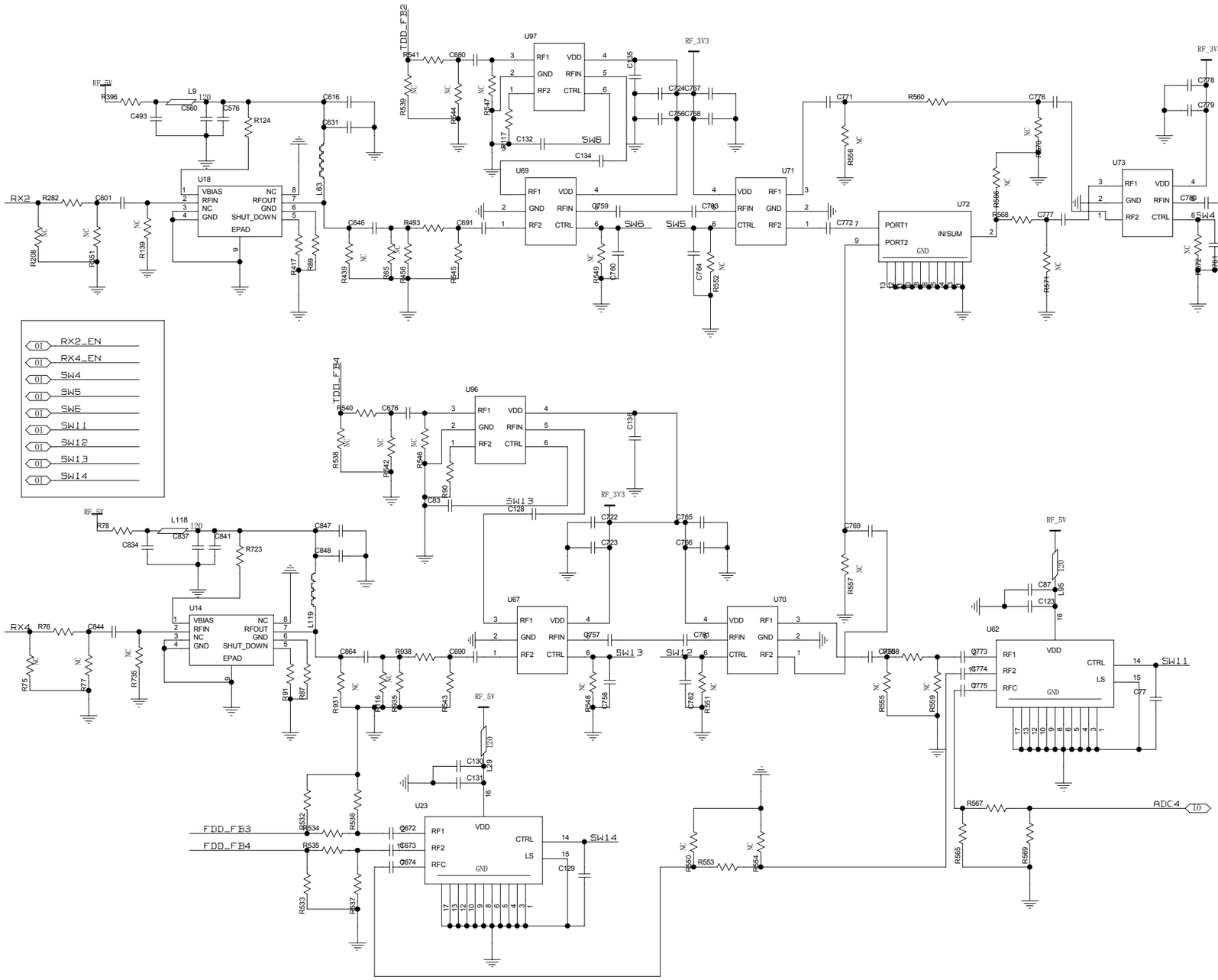


CADENCE DESIGN SYSTEMS, INC.

CADENCE

THIS DOCUMENT CONTAINS INFORMATION PROPRIETARY TO CADENCE DESIGN SYSTEMS INC (CADENCE). USE OR DISCLOSURE WITHOUT THE WRITTEN PERMISSION OF AN OFFICER OF CADENCE IS EXPRESSLY FORBIDDEN. COPYRIGHT (C) CADENCE 1988

DRAWING TITLE

SIZE C | REV. | DRAWING NO.

SCALE | SHEET OF

| REVISIONS | | | | |
|---|---|---|---|---|
| ZONE | LTR | DESCRIPTION | DATE | APPR. |
| | | | | |

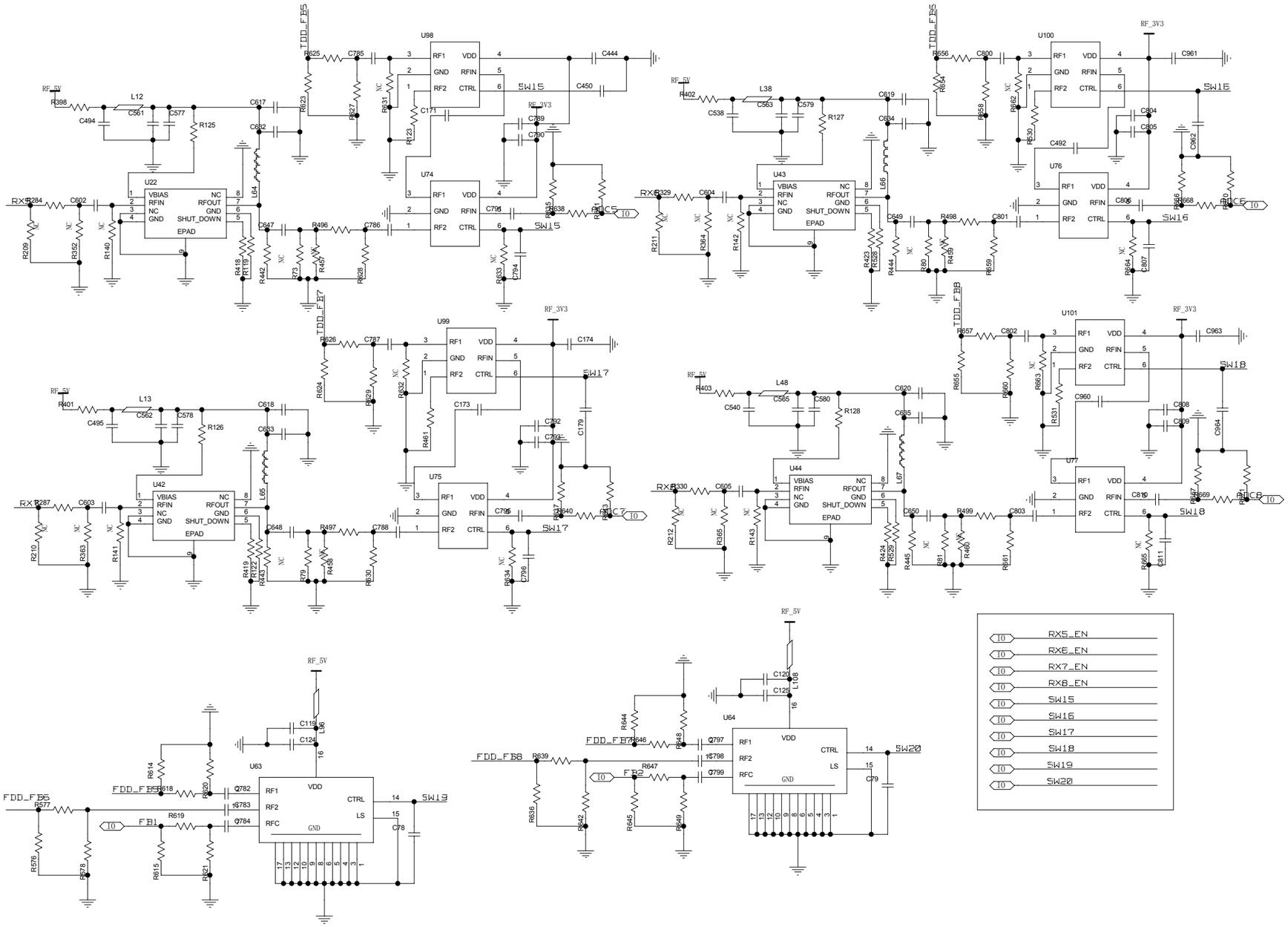


CADENCE DESIGN SYSTEMS, INC.

CADENCE

THIS DOCUMENT CONTAINS INFORMATION PROPRIETARY TO CADENCE DESIGN SYSTEMS INC (CADENCE). USE OR DISCLOSURE WITHOUT THE WRITTEN PERMISSION OF AN OFFICER OF CADENCE IS EXPRESSLY FORBIDDEN. COPYRIGHT (C) CADENCE 1988

DRAWING TITLE

| SIZE | REV. | DRAWING NO. |
|---|---|---|
| C | | |
| SCALE | | SHEET OF |

| REVISIONS | | | | |
|---|---|---|---|---|
| ZONE | LTR | DESCRIPTION | DATE | APPR. |
| | | | | |

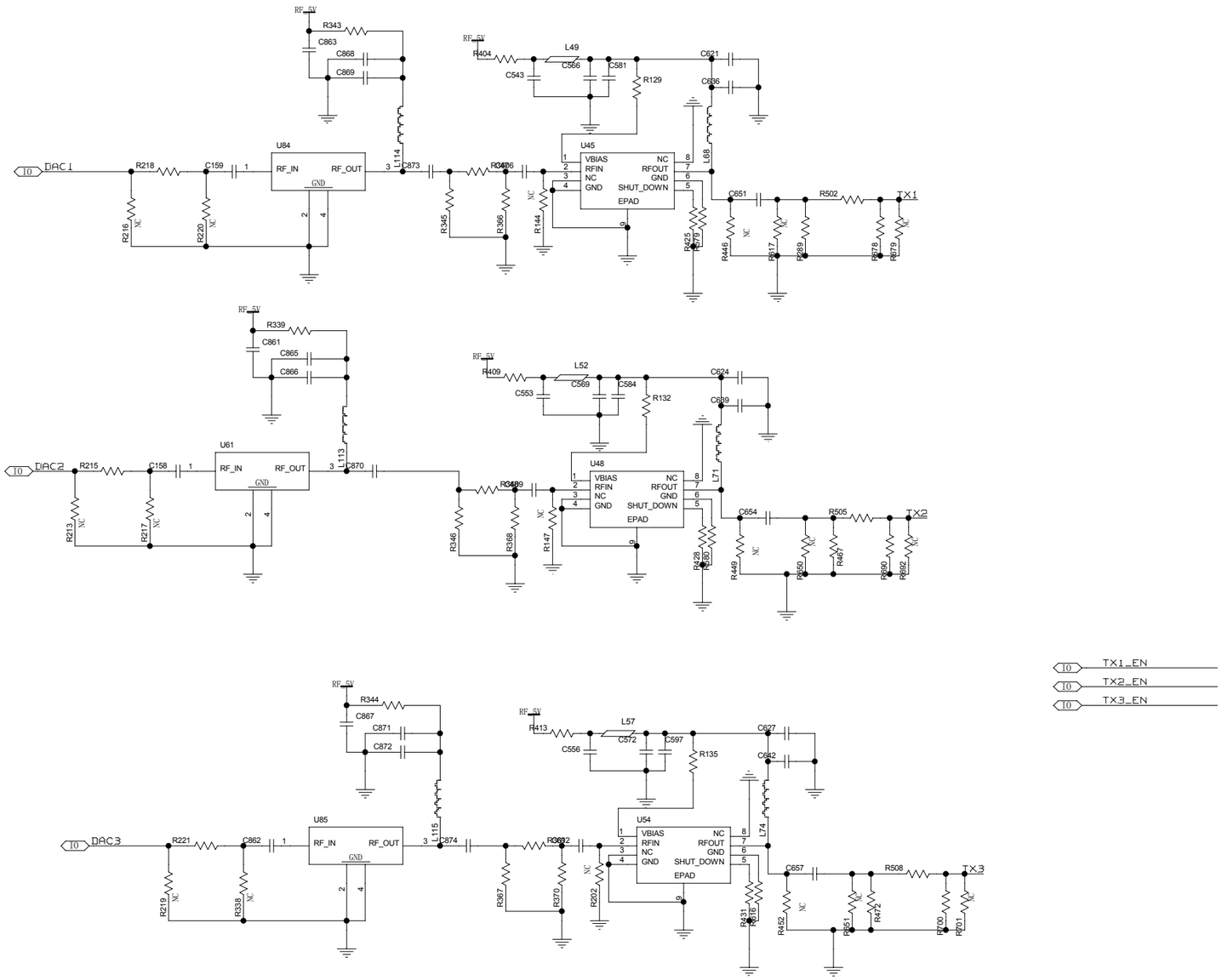


CADENCE DESIGN SYSTEMS, INC.

CADENCE

THIS DOCUMENT CONTAINS INFORMATION PROPRIETARY TO CADENCE DESIGN SYSTEMS INC (CADENCE). USE OR DISCLOSURE WITHOUT THE WRITTEN PERMISSION OF AN OFFICER OF CADENCE IS EXPRESSLY FORBIDDEN. COPYRIGHT (C) CADENCE 1988

DRAWING TITLE

| SIZE | REV. | DRAWING NO. |
|---|---|---|
| C | | |
| SCALE | | SHEET OF |

| REVISIONS | | | | |
|---|---|---|---|---|
| ZONE | LTR | DESCRIPTION | DATE | APPR. |
| | | | | |

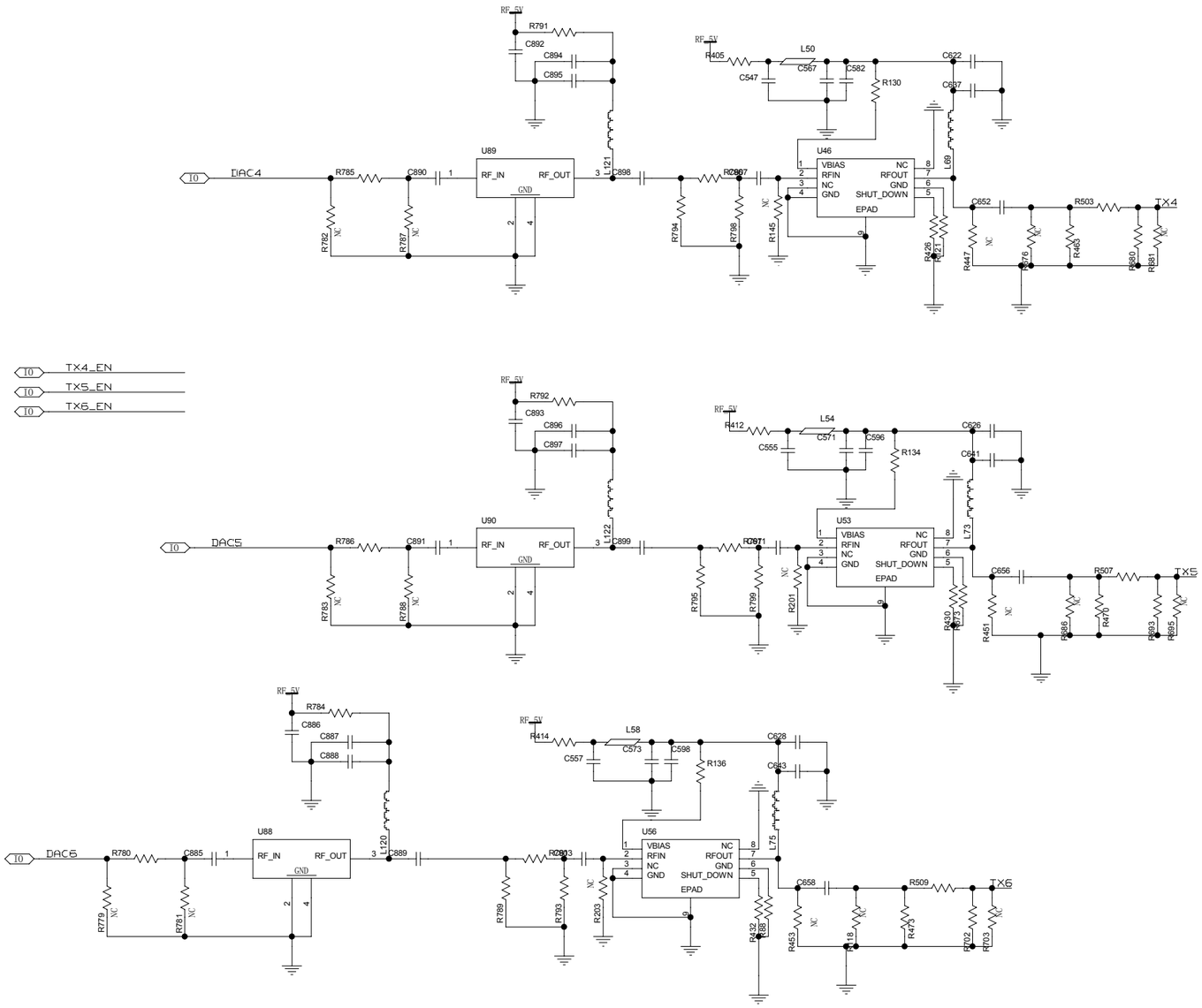


CADENCE DESIGN SYSTEMS, INC.
CADENCE

THIS DOCUMENT CONTAINS INFORMATION PROPRIETARY TO CADENCE DESIGN SYSTEMS INC (CADENCE). USE OR DISCLOSURE WITHOUT THE WRITTEN PERMISSION OF AN OFFICER OF CADENCE IS EXPRESSLY FORBIDDEN. COPYRIGHT (C) CADENCE 1988

DRAWING TITLE

SIZE C | REV. | DRAWING NO.

SCALE | SHEET OF

| REVISIONS | | | | |
|---|---|---|---|---|
| ZONE | LTR | DESCRIPTION | DATE | APPR. |
| | | | | |

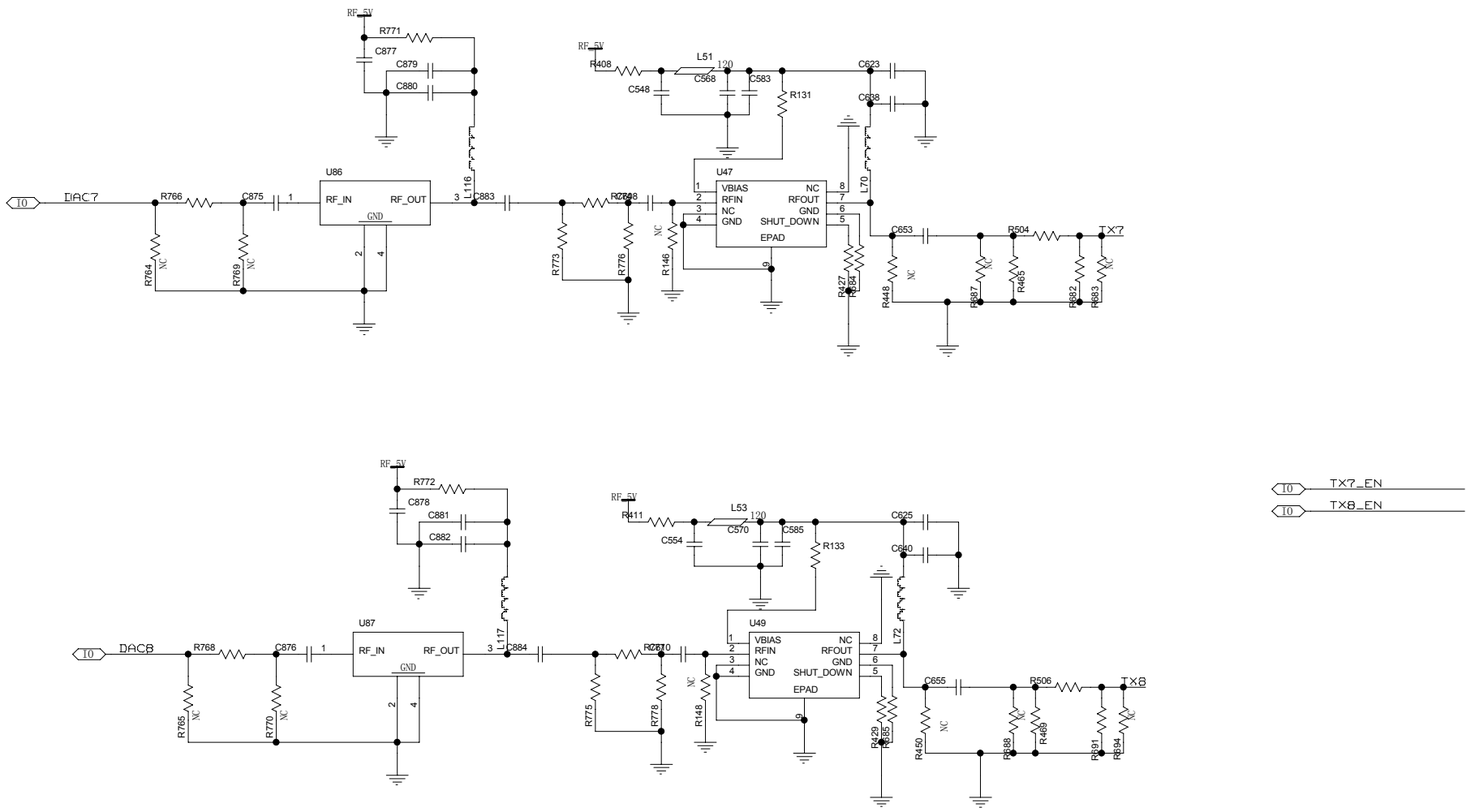


CADENCE DESIGN SYSTEMS, INC.

CADENCE

THIS DOCUMENT CONTAINS INFORMATION PROPRIETARY TO CADENCE DESIGN SYSTEMS INC (CADENCE). USE OR DISCLOSURE WITHOUT THE WRITTEN PERMISSION OF AN OFFICER OF CADENCE IS EXPRESSLY FORBIDDEN. COPYRIGHT (C) CADENCE 1988

DRAWING TITLE

| SIZE | REV. | DRAWING NO. |
|---|---|---|
| C | | |
| SCALE | | SHEET OF |

| REVISIONS | | | | |
|---|---|---|---|---|
| ZONE | LTR | DESCRIPTION | DATE | APPR. |
| | | | | |

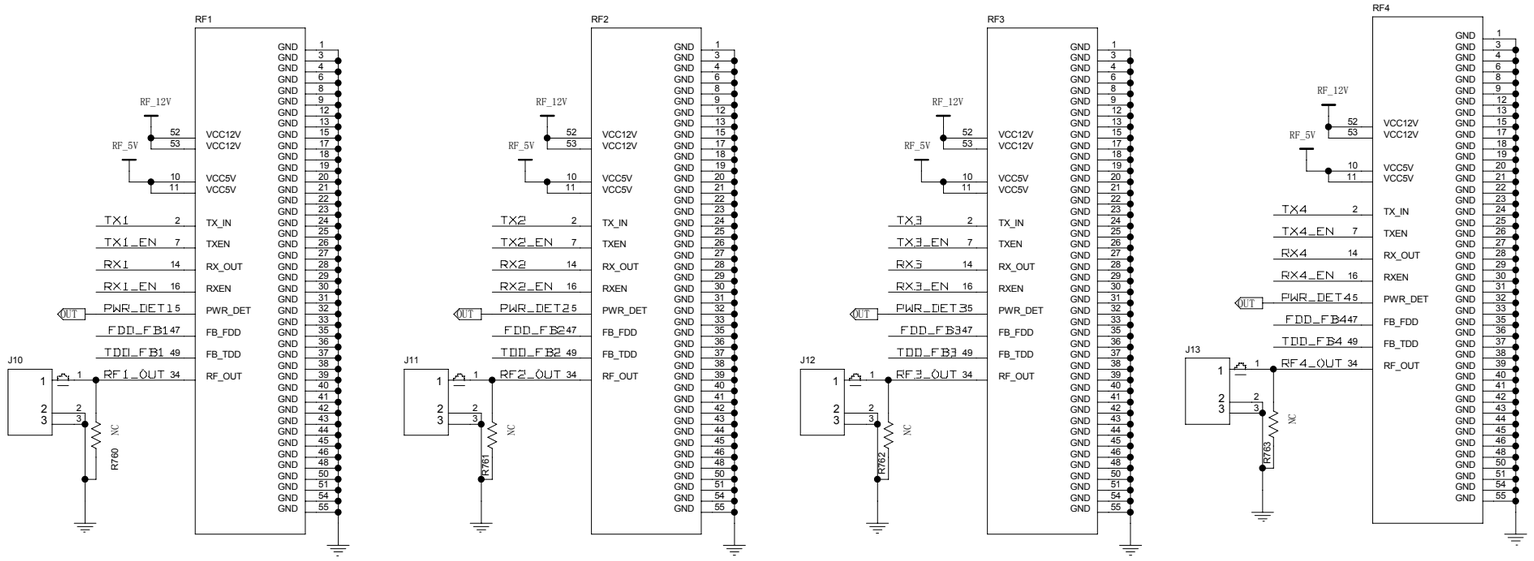


CADENCE DESIGN SYSTEMS, INC.

CADENCE

THIS DOCUMENT CONTAINS INFORMATION PROPRIETARY TO CADENCE DESIGN SYSTEMS INC (CADENCE). USE OR DISCLOSURE WITHOUT THE WRITTEN PERMISSION OF AN OFFICER OF CADENCE IS EXPRESSLY FORBIDDEN. COPYRIGHT (C) CADENCE 1988

DRAWING TITLE

SIZE C | REV. | DRAWING NO.

SCALE | SHEET OF

| REVISIONS | | | | |
|---|---|---|---|---|
| ZONE | LTR | DESCRIPTION | DATE | APPR. |
| | | | | |

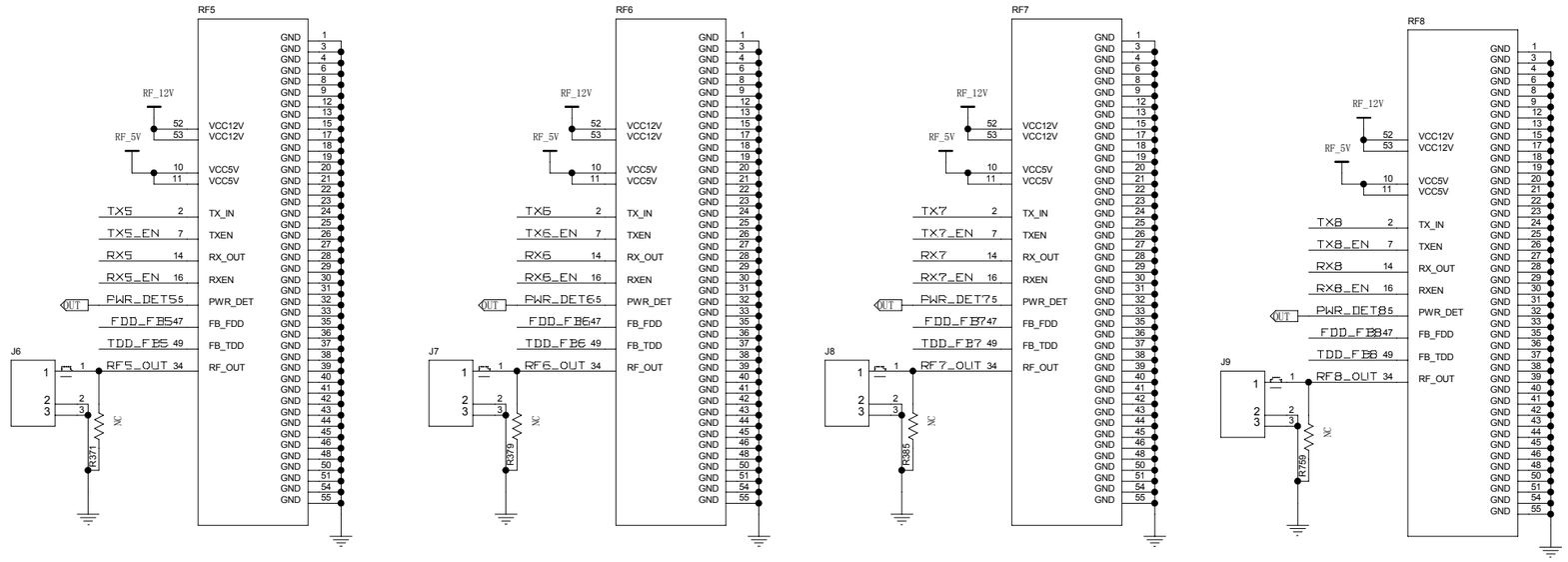


CADENCE DESIGN SYSTEMS, INC.

CADENCE

THIS DOCUMENT CONTAINS INFORMATION PROPRIETARY TO CADENCE DESIGN SYSTEMS INC (CADENCE). USE OR DISCLOSURE WITHOUT THE WRITTEN PERMISSION OF AN OFFICER OF CADENCE IS EXPRESSLY FORBIDDEN. COPYRIGHT (C) CADENCE 1988

DRAWING TITLE

SIZE C | REV. | DRAWING NO.

SCALE | SHEET OF