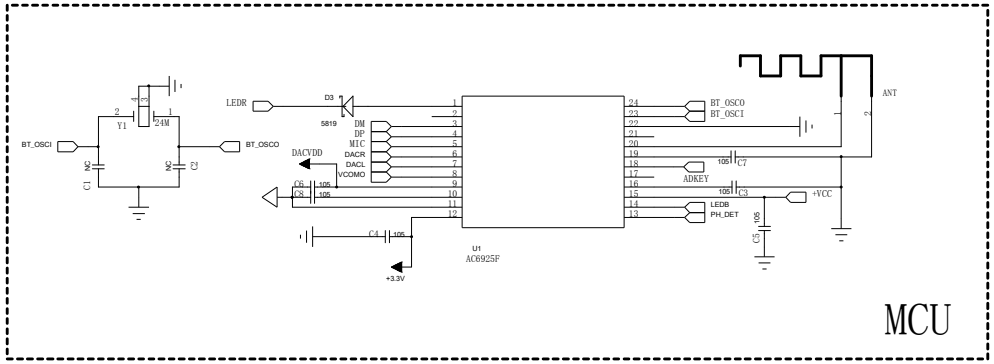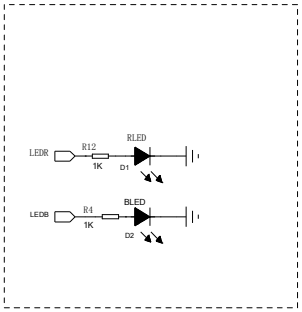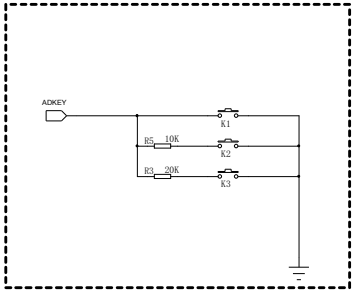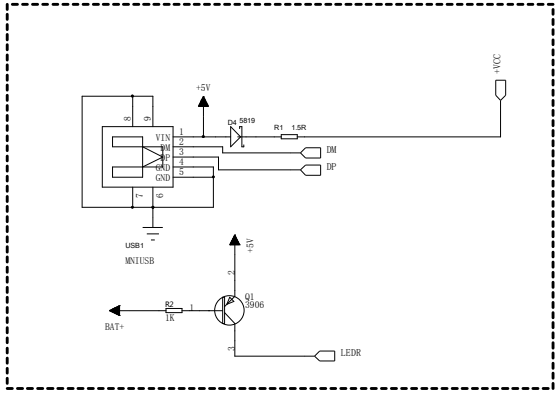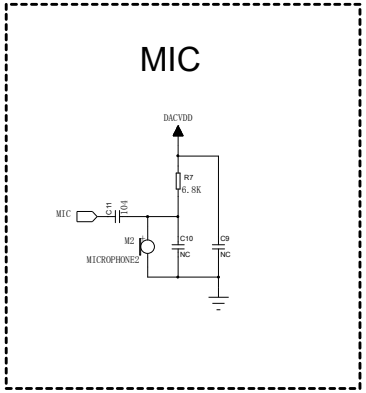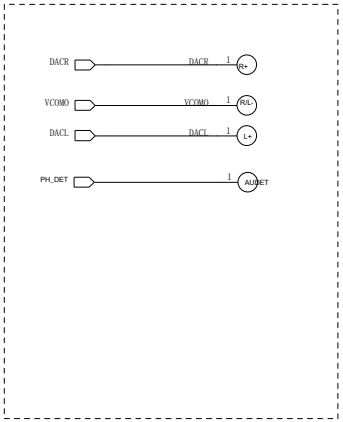REVISION RECORD			
LTR	ECO NO:	APPROVED:	DATE: