PART NUMBER			195D1573	A
ECN/DATE	BY	APP	REVISION	REV
R-142 6/26/01	BW	RK	RELEASE	A

REF DES	PART NUMBER	DESCRIPTION	QTY
CAPACITORS			
C1	30B0477	CAP LYTIC 4.7UF 16V	1
C2	30B0431	CAP VARIABLE 1.8-5.0PF	1
C3	30D76800000	CAP SMD805 6.8PF NPO	1
C4	30D72003000	CAP SMD805 2.0PF NPO	1
C5	30D76800000	CAP SMD805 6.8PF NPO	1
C8,C9,C7	30D71020000	CAP SMD805 100PF NPO	6
C10,C11,C12			
C6	30D710422R0	CAP SMD805 0.01UF	1
DIODES			
D1	52B0065	DIODE SOT23	1
INDUCTORS			
L1	40B0092	INDUCTOR LEADED 470UH	1
JUMPERS			
JU1	217A0147	JUMPER LEADED 0.5"	1
JU2	311C0001	JUMPER SMD 0 OHMS	1
JU3	217A0147	JUMPER LEADED 0.25"	1
TRANSISTORS			
Q1	207C0073	XTOR SMD NPN SW	1
Q2	207C0074	XTOR SMD NPN RF	1
RESISTORS			
R1	311C1015	RES SMD805 100	1
R2	311C4325	RES SMD805	1
R3	311C2205	RES SMD805 22	1
R4	311C6225	RES SMD805 6.2K	1
R5	311C1525	RES SMD805 1.5K	1
R6	311C1035	RES SMD805 10K	1
SWITCHES			
S1 - S4	SEE NOTE 5	SW MOMENTARY SPST	
IC			
U1	NOTE 5	SOIC, ATMEL ENCODER	1
BATTERY CONNECTORS			
E2	32D0134	BATTERY CONTACT NEG	1
E1	32C0133	BATTERY CONTACT POS	1
B1	10A0020	BATTERY LITHUM 2032 3V	1
ITEM 1	14D0481	PCB 1/3 CH TX	1
	190A0460	PRODUCT SPECIFICATION	
	190A0461	FINAL TEST SPEC	

NOTES:

1. ALL LEADED COMPONENTS TO BE INSERTED TO WITHIN 0.020" OF BODY OR PREFORM LIMITS UNLESS OTHERWISE SPECIFIED.
2. LEAD CLIPPING SPEC: 0.050" MIN, 0.095 MAX.
3. CLEANING OF ASSEMBLY WITH A CLEANING SOLVENT AFTER SOLDERING IS NOT PERMITTE
4. TEST SPECIFICATION: 190A0460
5. COMPONENT USAGE CHART:

	001A5536-1 1ch RC 315MHz	001A5536-3 3ch RC 315MHz
S1, S2, S3	NOT USED	180B0120-2
S4	180B0120-2	NOT USED
U1	125C0130	125C0130

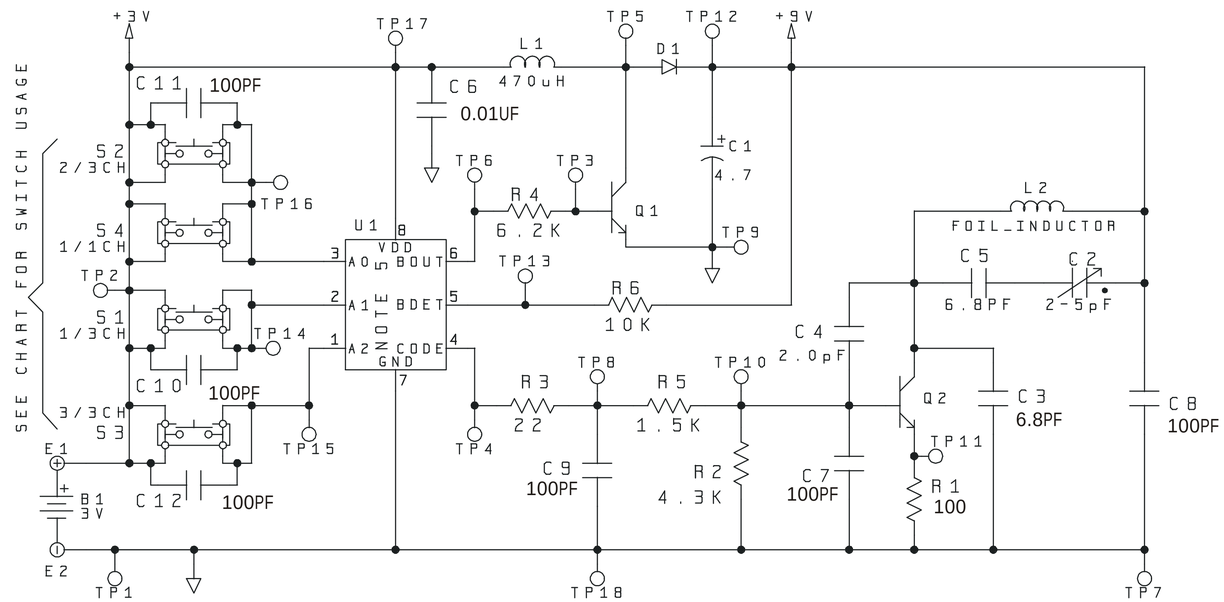

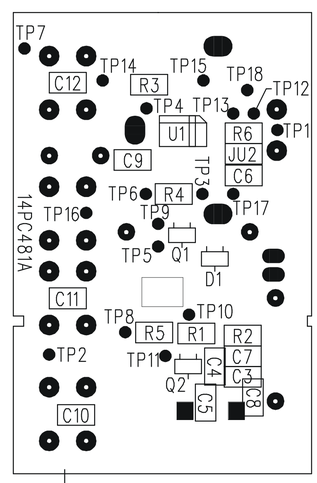

1 SOLDER SIDE

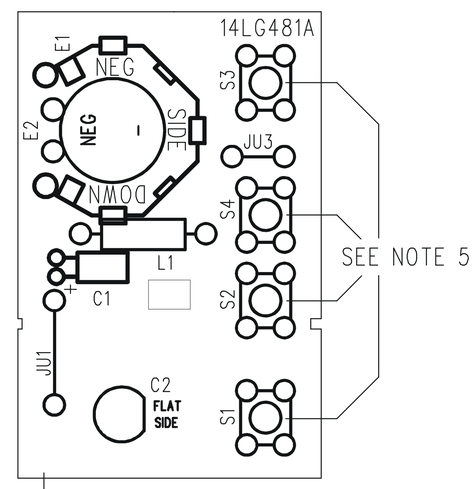

1 COMPONENT SIDE

CHAMBERLAIN CONSUMER PRODUCTS GROUP
A UNIT OF DUCHOSSOIS INDUSTRIES, INC.

NAME: ASSEMBLY, BOARD, 1 & 3 CHANNEL 315MHZ ROLLING CODE TRANSMITTERS

MATERIAL

CONFIDENTIAL
THIS DRAWING AND/OR THE INFORMATION CONTAINED HEREIN IS AND REMAINS THE SOLE PROPERTY OF, AND IS PROPRIETARY TO, THE CHAMBERLAIN GROUP, INC. (CHAMBERLAIN). THIS DRAWING AND/OR INFORMATION SHALL BE KEPT CONFIDENTIAL AND MAY NOT BE REPRODUCED, COPIED, MODIFIED, DISCLOSED, TRANSFERRED, OR MADE AVAILABLE TO OTHERS, EXCEPT WITH THE WRITTEN CONSENT OF CHAMBERLAIN. THIS DRAWING AND/OR ALL COPIES, IF ANY, ARE SUBJECT TO RETURN TO CHAMBERLAIN.

THIS IS A COMPUTER GENERATED DRAWING

DO NOT CHANGE THIS DOCUMENT WITHOUT UPDATING THE COMPUTER DATA BASE

DO NOT SCALE DRAWING

TOLERENCE UNLESS OTHERWISE SPECIFIED
±.010 .00 DECIMAL
±.005 .000 DECIMAL
±1/64 ON FRACTIONS
±.30° ON ANGLES
±.003 ON HOLES

THIS COPY ISSUED:

FINISH

	BY	DATE
DRAWN	BW	6/26/01
CHECKED	RK	8/28/01
APPROVED		

SCALE	PART NUMBER	REV
	195D1573	A