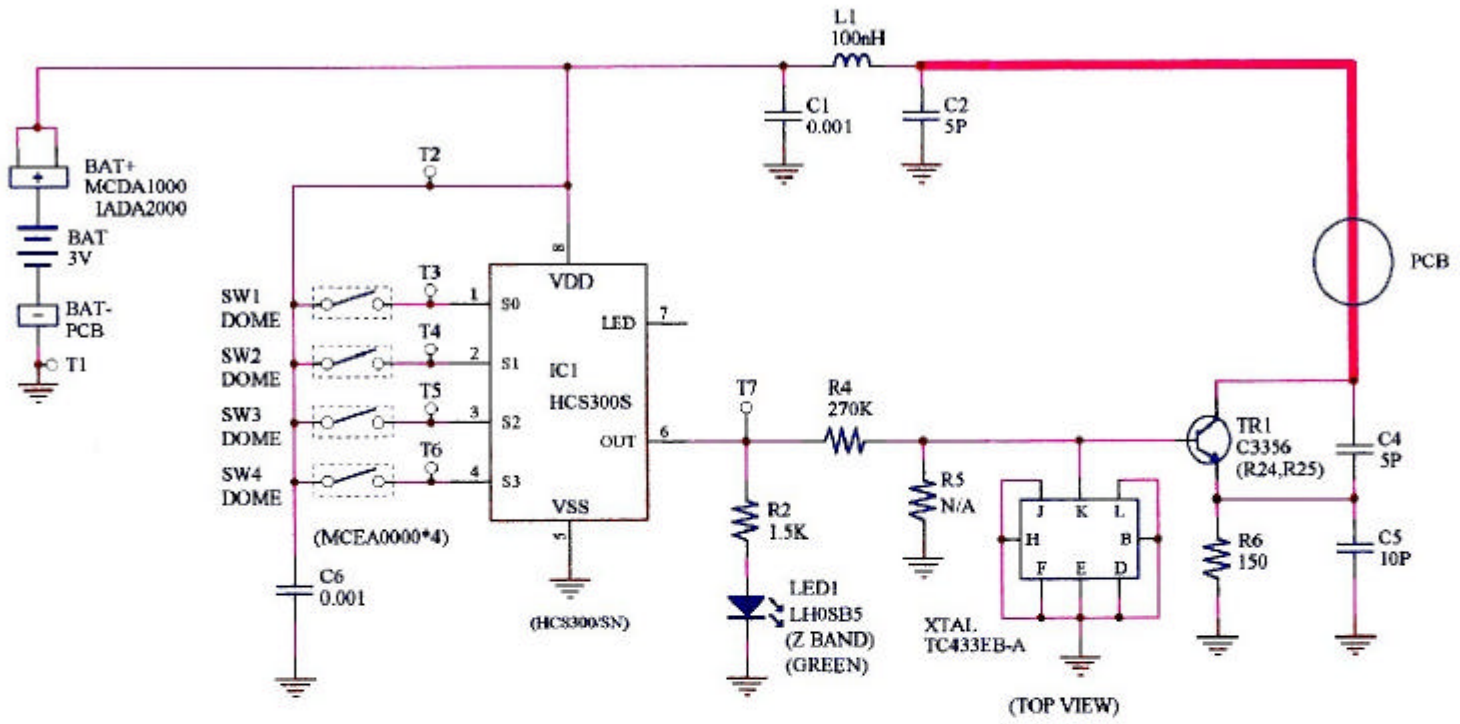

N51F045A

NUTEK CORPORATION			
NAME:			
APPD BY:		DATE:	
CHK BY:		DATE:	
DRN BY:		DATE:	2002 10 24
SHEET 1	OF 1	REV:	A