TK-190 BLOCK DIAGRAM
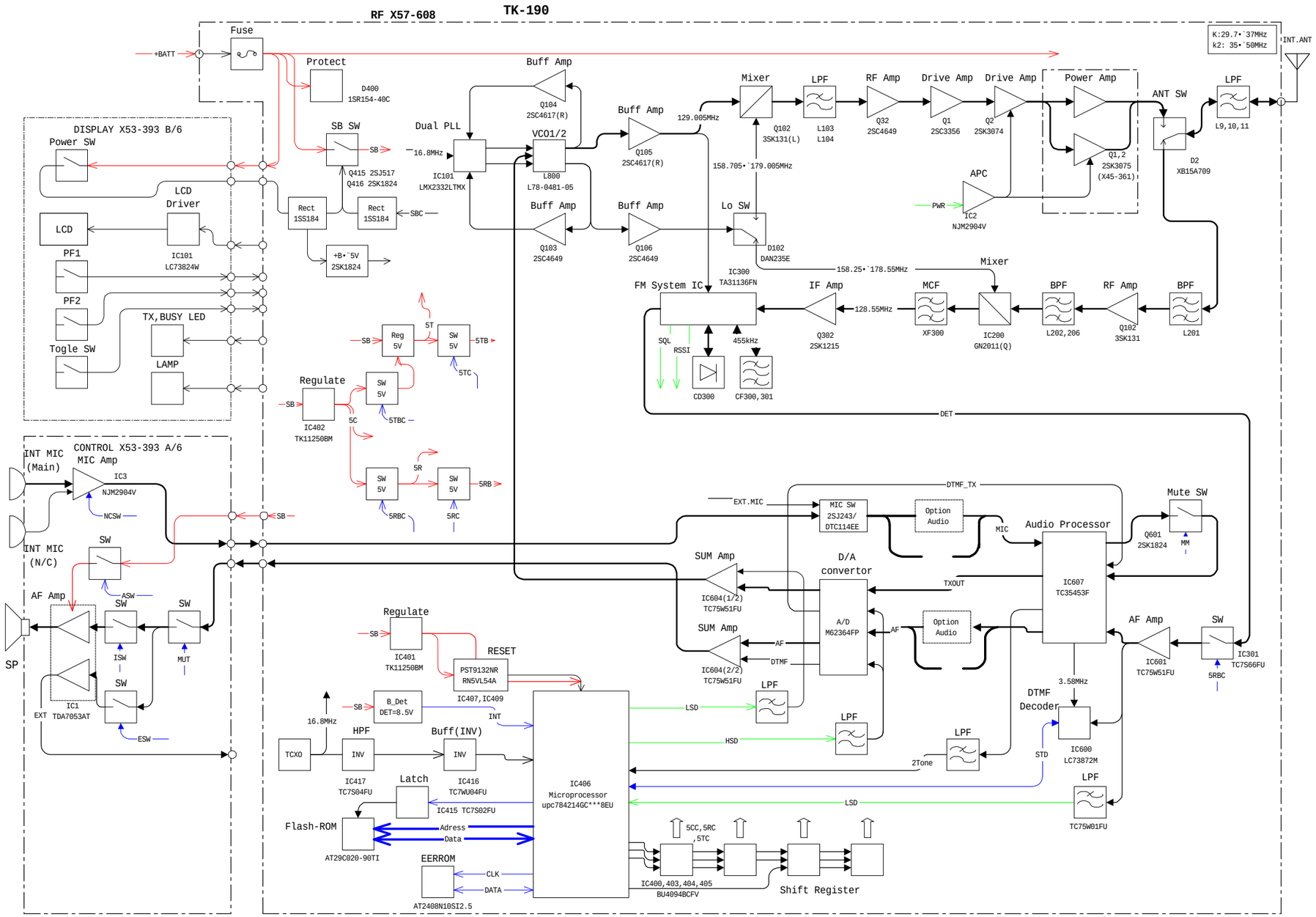
FCC ID:ALH29521110(TK-190K)
FCC ID:ALH29521120(TK-190K2)