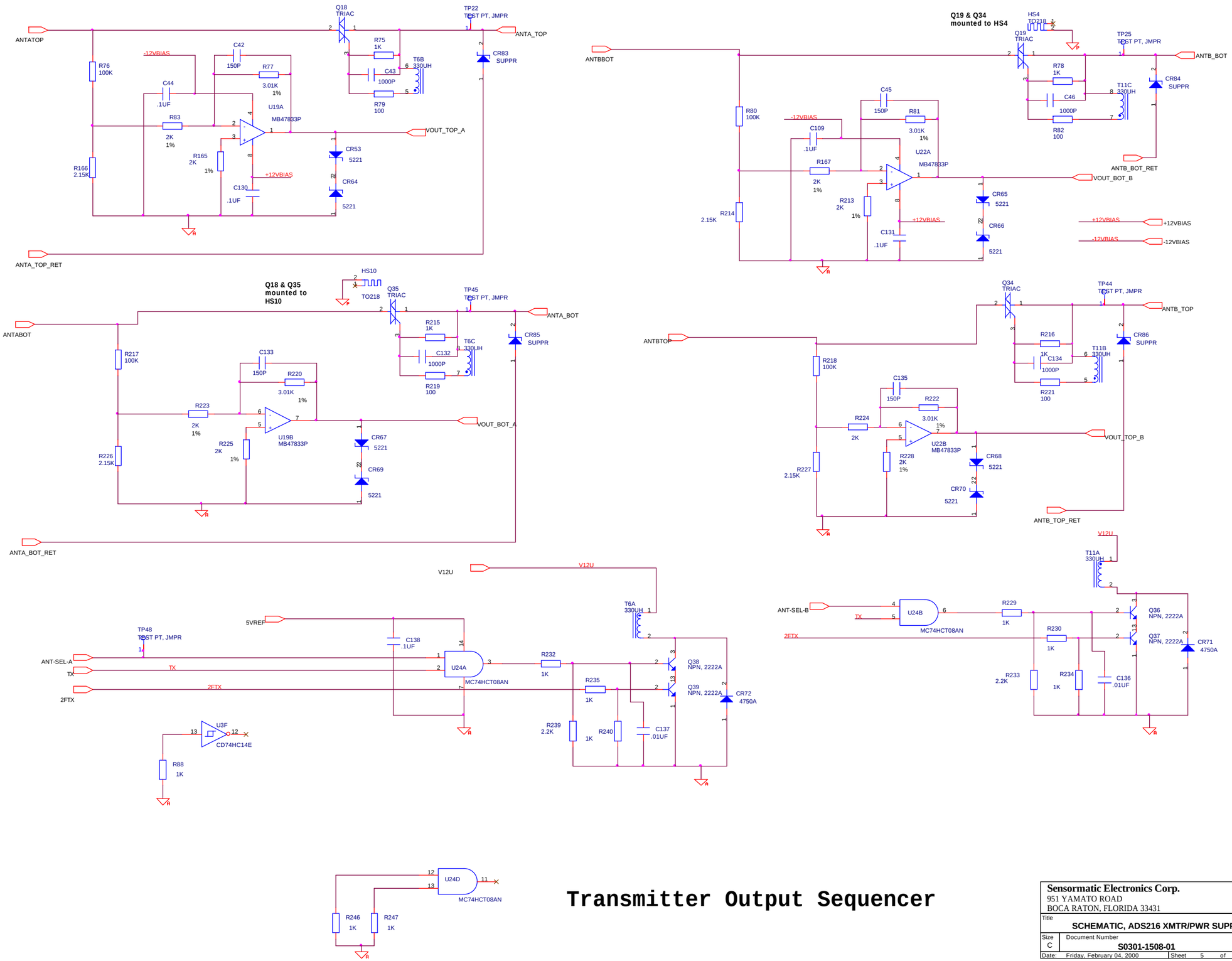

Transmitter Output Sequencer

Sensormatic Electronics Corp.
951 YAMATO ROAD
BOCA RATON, FLORIDA 33431

Title: SCHEMATIC, ADS216 XMTR/PWR SUPPLY NE		
Size: C	Document Number: S0301-1508-01	Rev: 3C
Date: Friday, February 04, 2000	Sheet 5 of 6	