REFDES	PART NUMBER	DESCRIPTION	VALUE	QTY
C1,C9	30D71020100	CAPACITOR, SMD0805	100PF	2
C2	30D6560001	CAPACITOR, SMD1206	5.6PF	1
C3	30D71500000	CAPACITOR, SMD0805	1.5PF	1
C4	30D76800000	CAPACITOR, SMD0805	6.8PF	1
C5,C6,C7,C8	30D710422R0	CAPACITOR, SMD0805	0.01	4
C10	30D710522R0	CAPACITOR, SMD0805	0.1	1
D1,D2,D3	52B0074	DIODE, LED T1		3
D4,D6	52B0065	DIODE, SMD SIGNAL		2
D5	52B0066	DIODE, SMD ZENER	6.2V	1
D7,D8,D9	52B0070	DIODE, SMD DUAL COMMON CATHODE		3
E1,E2	203C0197	TERMINAL, 12V BATTERY		2
L1	40B0051-1	INDUCTOR, VARIABLE		1
L2,L3	40A0059	INDUCTOR, AIRWOUND	30NH	2
Q1	207C0074	TRANSISTOR, SMD NPN RF		1
Q2,Q3,Q6	207C0073	TRANSISTOR, SMD NPN SWITCH		3
Q4,Q5	207C0069	TRANSISTOR, SMD PNP SWITCH		2
R1	311C1525	RESISTOR, SMD0805 5%	1.5K	1
R2,R3,R5,R7, R8	311C1535	RESISTOR, SMD0805 5%	15K	5
R4,R14,R31	311C1025	RESISTOR, SMD0805 5%	1K	3
R6,R9,R15	311C1045	RESISTOR, SMD0805 5%	100K	3
R10,R11	311C2035	RESISTOR, SMD0805 5%	20K	2
R12,R13,R21, R22,R23,R24, R25	311C1035	RESISTOR, SMD0805 5%	10K	7
R16,R17,R26, R27,R28,R29, R30	311C4735	RESISTOR, SMD0805 5%	47K	7
R18,R19,R20	311C4725	RESISTOR, SMD0805 5%	4.7K	3
R32	311C1055	RESISTOR, SMD0805 5%	1M	1
U1	125C0157	I.C., ROLLCODE KEYLESS ENTRY		1
U2	NOT USED			1
X1	33B0039	RESONATOR, CERAMIC	4MHZ	1
1	14D0459	BOARD, PC		1
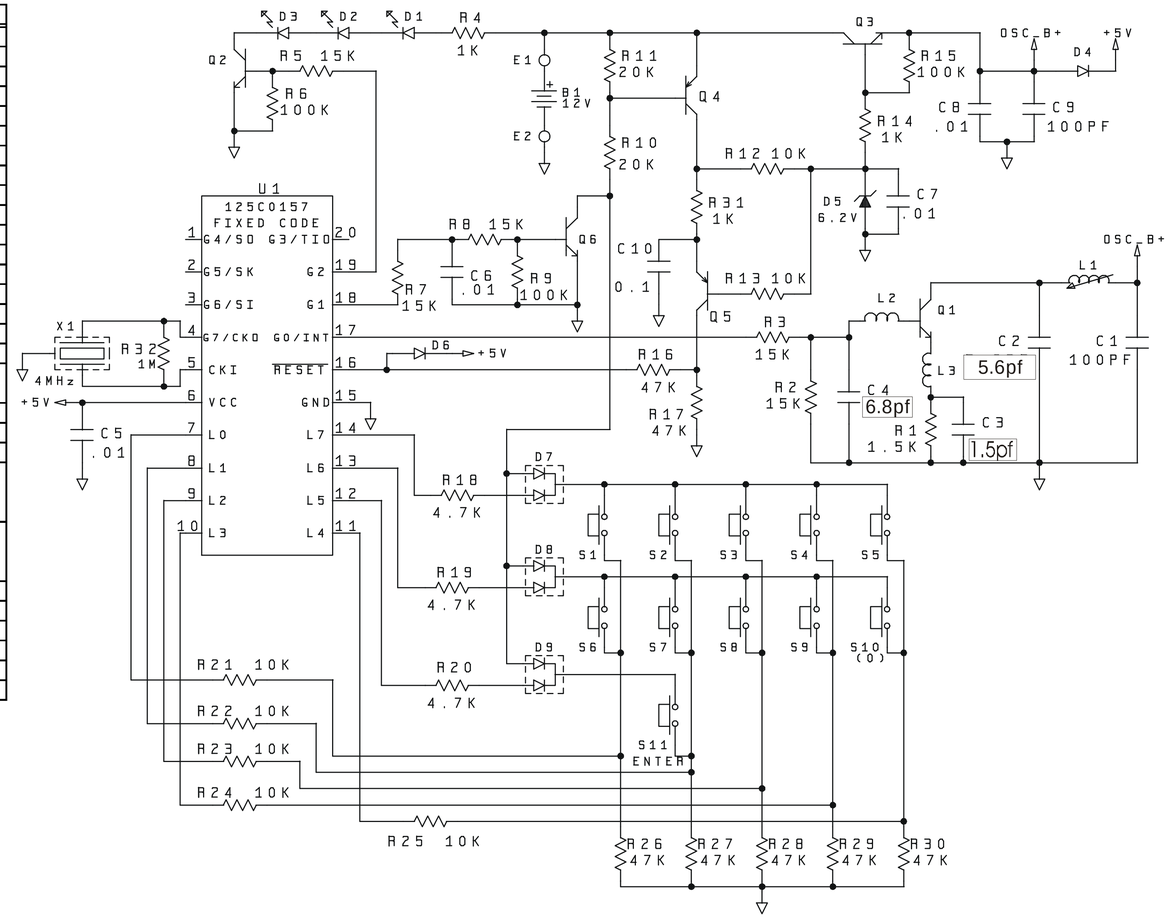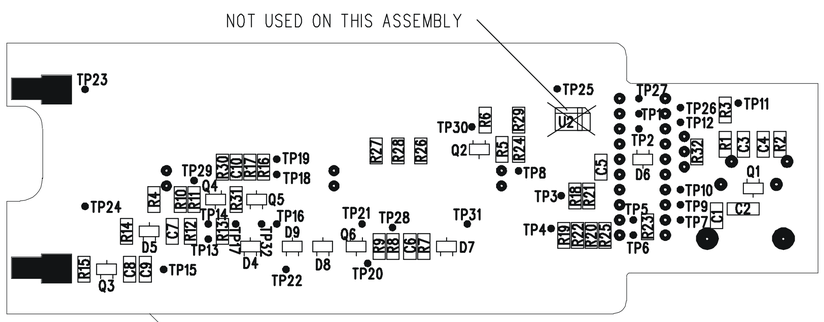
NOTES:
1. ALL LEADED COMPONENTS TO BE INSERTED TO WITHIN 0.020" OF BODY OR PREFORM LIMITS.
2. TEST SPEC.: 190A0439
3. PRECAUTIONS MUST BE TAKEN TO PREVENT FINGER OIL OR OTHER FILMS FROM BEING DEPOSITED ON THE CARBON ELECTRODES DURING HANDLING AND ASSEMBLY.
4. ALL TABS REMOVED DURING DEPANELING TO BE CUT FLUSH TO EDGE OF PCB, BUT NO MORE THAN 0.005" INTO BOARD. ALL SHARP CORNERS MADE BY DEPANELING TOOL MAY HAVE A MAXIMUM OF 0.010" RADIUS.