REVISIONS				
REV.	ACC.	DESCRIPTION	DRN.	DATE
1				
2				

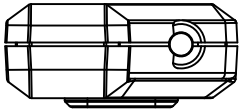

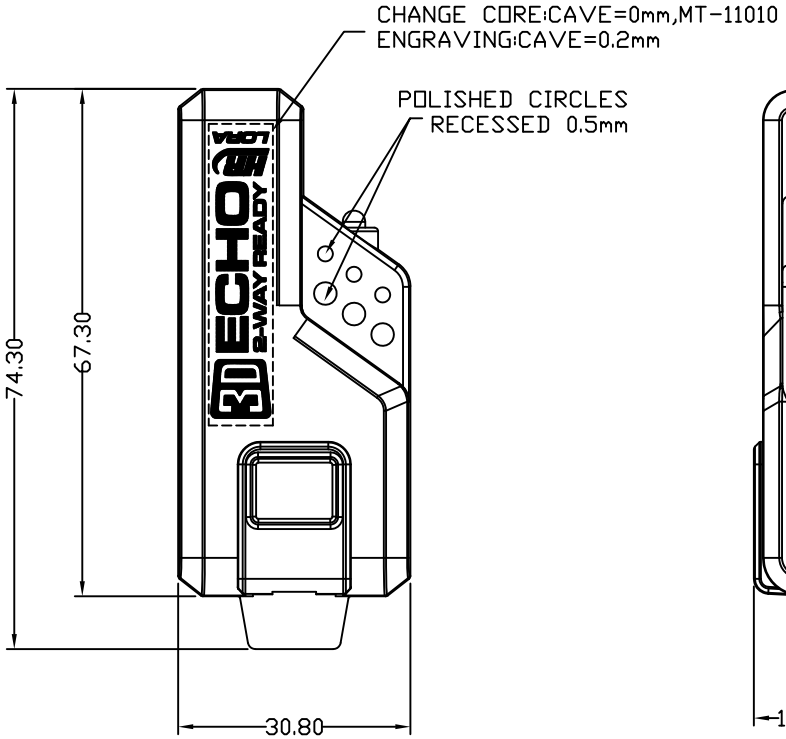

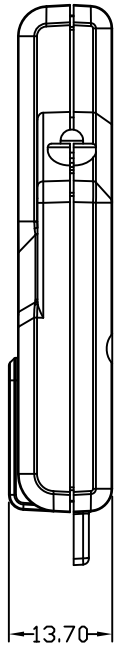

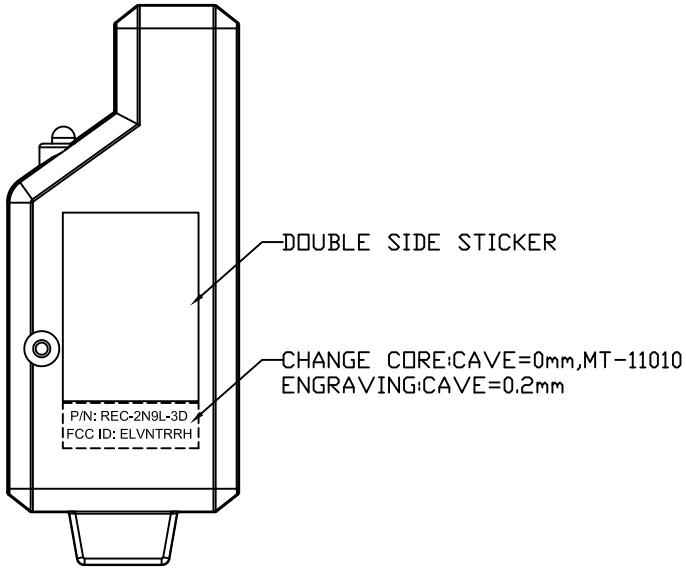

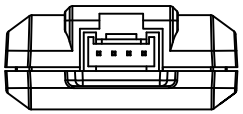

CASE P/N:IAERC0F6
KEY P/N:IKAGA000
SCREW P/N:MTF02008*1

BODY MATERIAL : HIGH HEAT ABS+UV

1. **Texture is same as** MT-11010
2. **Radious will be** 0.2 **if not specified.**
3. **Screw** : MTF02008x1

*Tolerance please refer specification of tolerance limits "c"

INJECT TOLERANCE SPEC.

GRADE / DIMENSION	A ±	B ±	C ±
UNDER 6	0.05	0.15	0.30
6~30	0.10	0.20	0.40
30~120	0.20	0.40	0.80
120~300	0.40	0.80	2.00

SCALE: 1:1	UNIT: M/M	DRN BY FELIX	DATE 2017/7/31	NUTEK CORPORATION
MATERIAL		CHK BY YYS		TITLE REC-2N9L-3D
FINISH		APPD BY Victor		SIZE A4 / DEPT / DRAWING NO 105I0120-7 / REV 0
CODE		SHEET	OF	