01:G733G M/B DESCRIPTION
02:Pentium4_LGA775-1
03:Pentium4_LGA775-2
04:Pentium4_LGA775-3 & LM90
05:661FX (HOST/AGP)
06:661FX (RAM CONTROLLER)
07:661FX (HYPERZIP/AGP)
08:661FX (POWER)
09:963 (PCI/IDE)
10:963 (MISC.)
11:963 (USB CONTROLLER)
12:963 (POWER)
13:CLOCK GENERATOR
14:CLOCK BUFFER FOR DDR
15:DDR SODIMM & MDC
16:DDR_RES VTT
17:CRT & PRN CONN.
18:AC97 & AMPLIFIER
19:HDD & CD-ROM CONN.
20:KEYBOARD CONTROLLER
21:ITE8705F LPC SUPER IO
22:LVDS INTERFACE (SIS 302LV)
23:LCD & TV CONN.
24:ENE 1410 CONTROLLER
25:PCMCIA CONN.
26:POWER LED & RJ11 & STATUS
27:USB PORT & USBLAN
28:RTL8201 LAN PHY
29:AgereFW802C 1394 PHY
30:RTC & POWER SW
31:ADAPTOR/BATTERY SELECT
32:MB3887 CHARGER
33:MAX1999 SYSTEM POWER
34:MAX1546 CPU POWER
35:MAX1980
36:CHIPSET POWER & DDR2.5V
37:LDO & DDRVTT POWER
38:CPU_VTT_MAX1714
39:HISTORY

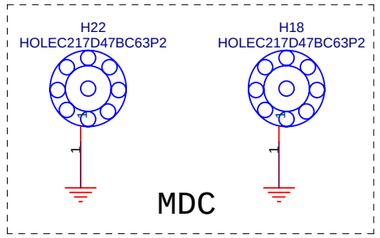

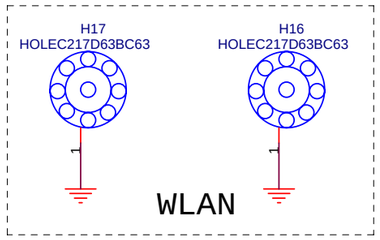

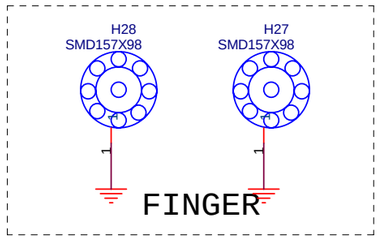

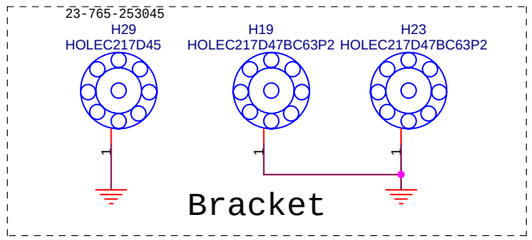

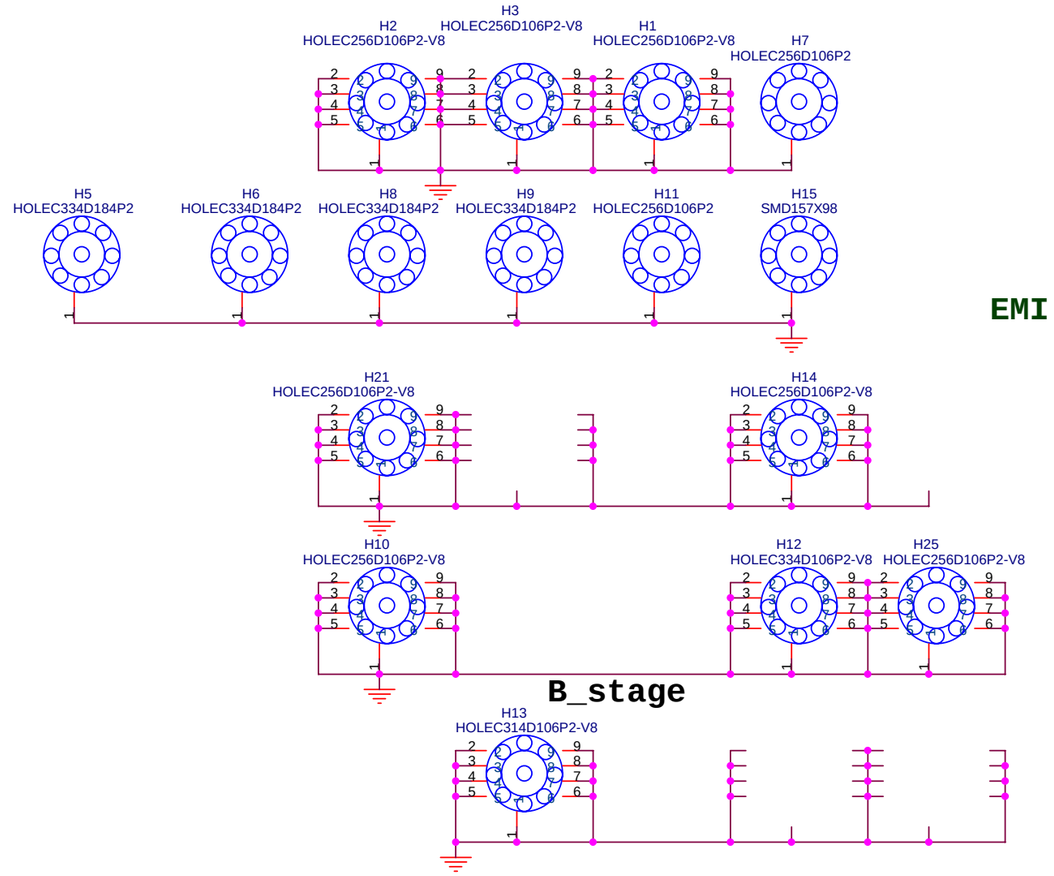

X = 0805 TYPE
Y = 1206 TYPE
C3216 = A TYPE
C3528 = B TYPE
C6032 = C TYPE
C7343 = D TYPE

P/N:15-F46-014002

PAGE	01	02	03	04	05	06	07	08	09	10	11	12	13	14	15	16	17	18	19
REV	4.0	4.0	4.0	4.0	4.0	4.0	4.0	4.0	4.0	4.0	4.0	4.0	4.0	4.0	4.0	4.0	4.0	4.0	4.0
DATE	1/12	1/12	1/12	1/12	1/12	1/12	1/12	1/12	1/12	1/12	1/12	1/12	1/12	1/12	1/12	1/12	1/12	1/12	1/12

PAGE	20	21	22	23	24	25	26	27	28	29	30	31	32	33	34	35	36	37	38	39
REV	4.0	4.0	4.0	4.0	4.0	4.0	4.0	4.0	4.0	4.0	4.0	4.0	4.0	4.0	4.0	4.0	4.0	4.0	4.0	4.0
DATE	1/12	1/12	1/12	1/12	1/12	1/12	1/12	1/12	1/12	1/12	1/12	1/12	1/12	1/12	1/12	1/12	1/12	1/12	1/12	1/12

ECS CORP. (G733G M/B)

Title: G733E M/B DESCRIPTION

Size: A3 | Document Number: G733G-1-3-01 | Rev: 4.0

Date: Wednesday, January 12, 2005 | Sheet 1 of 39

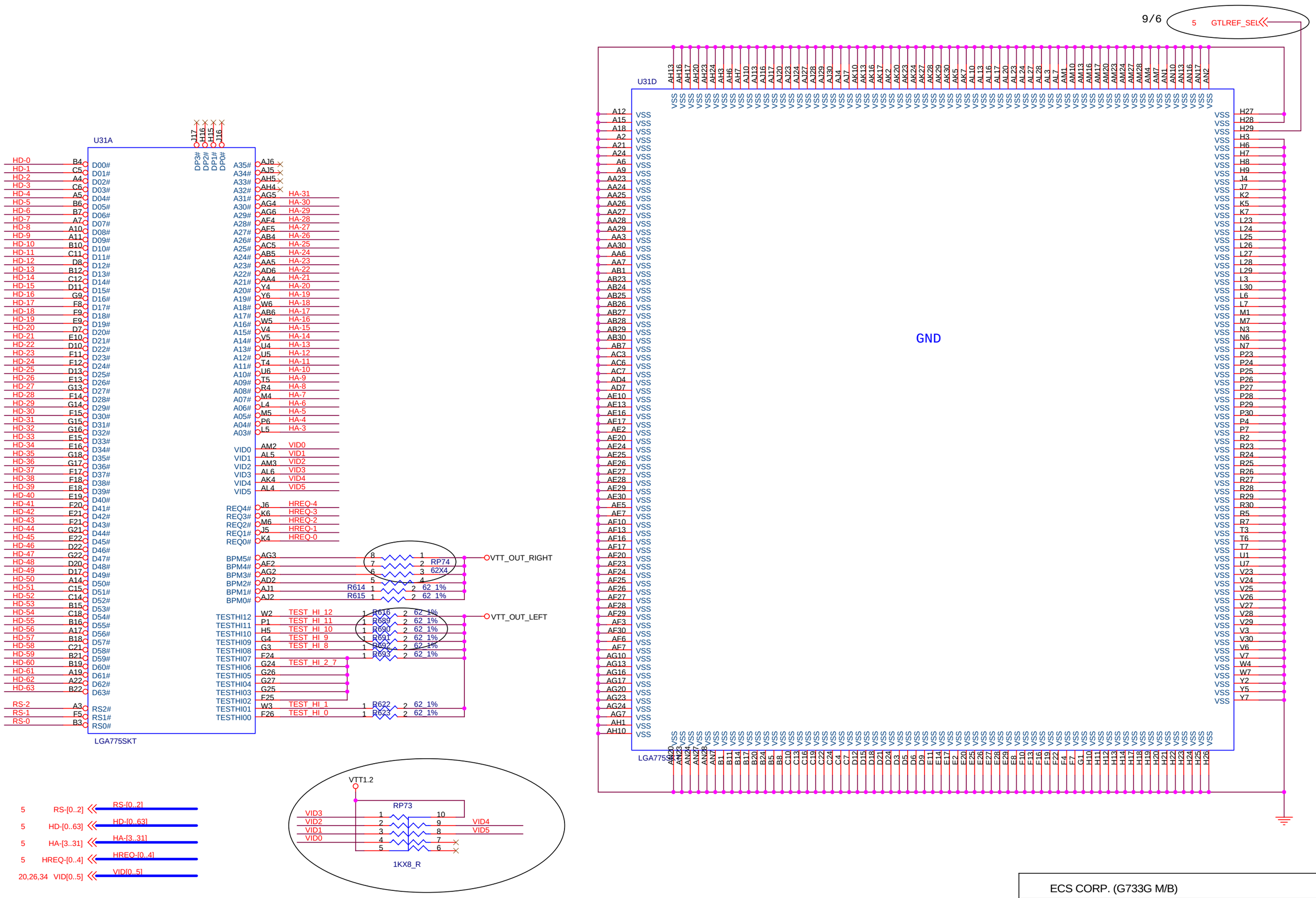

ECS CORP. (G733G M/B)	
Title	Pentium4_LGA775-1
Size A3	Document Number G733G-1-3-01
Rev	4.0
Date: Wednesday, January 12, 2005	Sheet 2 of 39

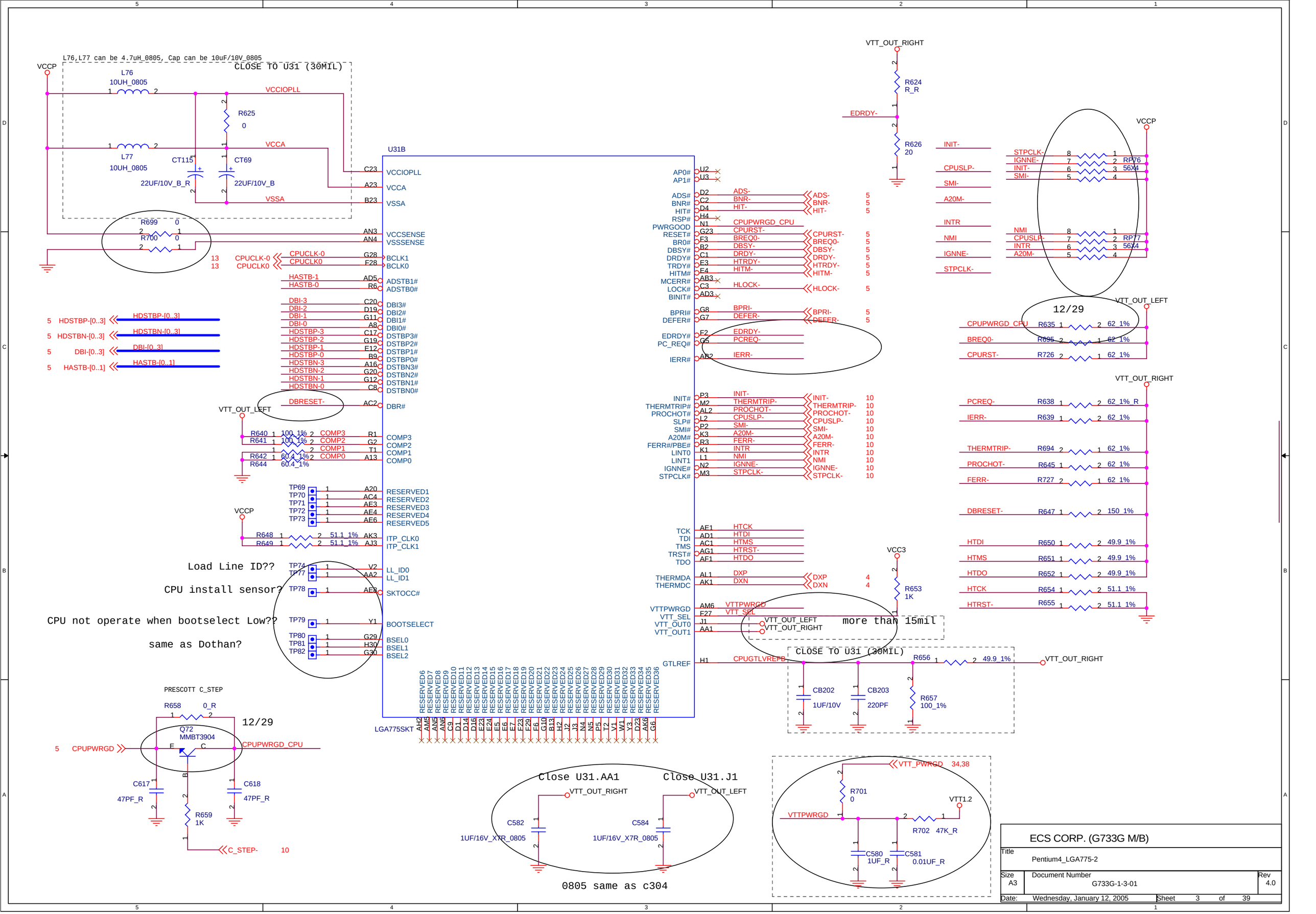

ECS CORP. (G733G M/B)

Title: Pentium4_LGA775-2

Size: A3 | Document Number: G733G-1-3-01 | Rev: 4.0

Date: Wednesday, January 12, 2005 | Sheet 3 of 39

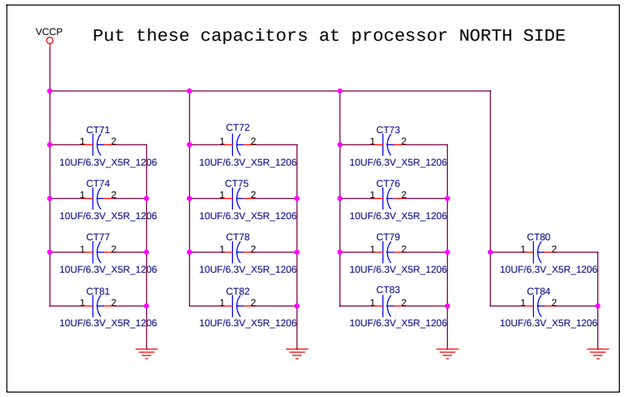

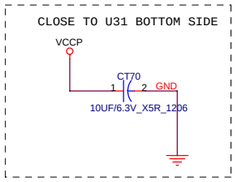

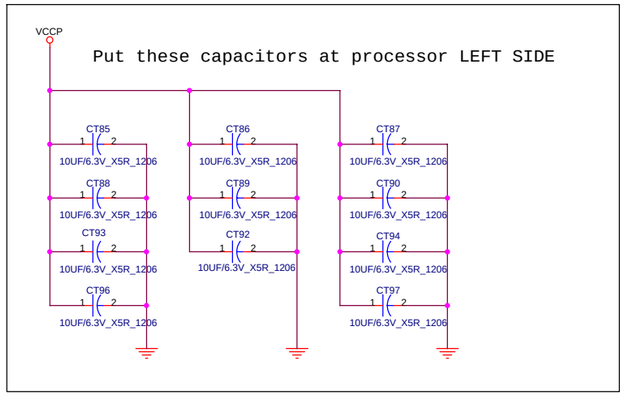

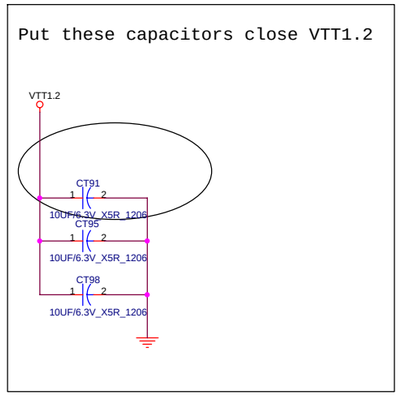

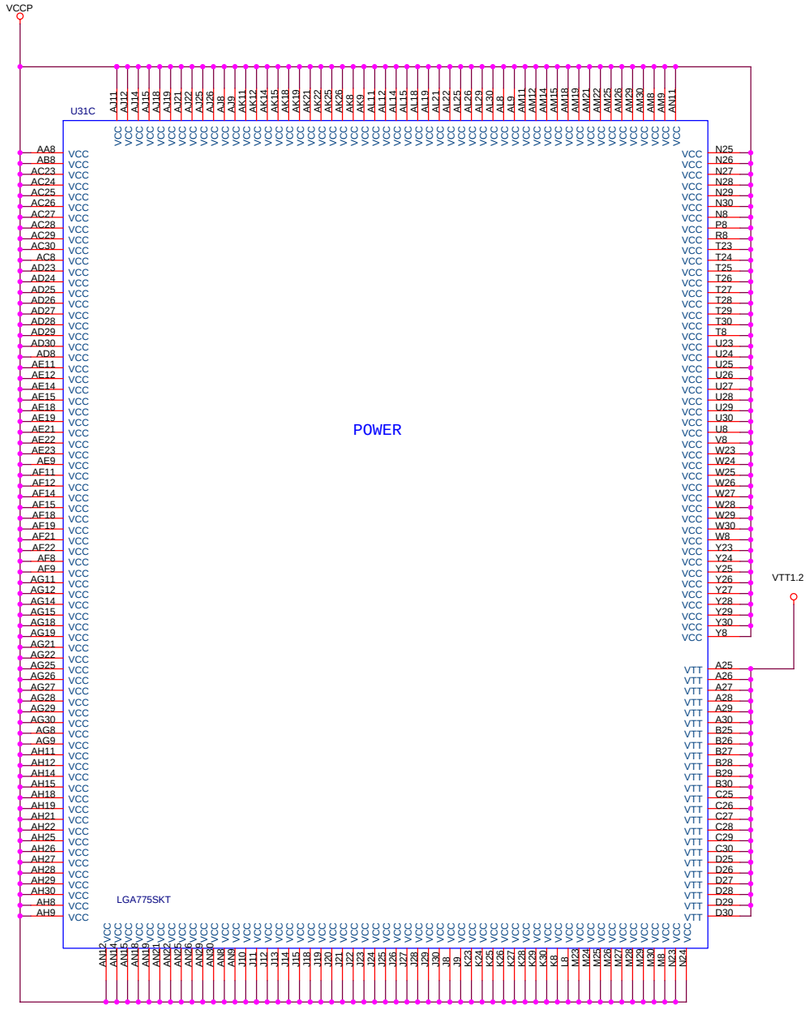

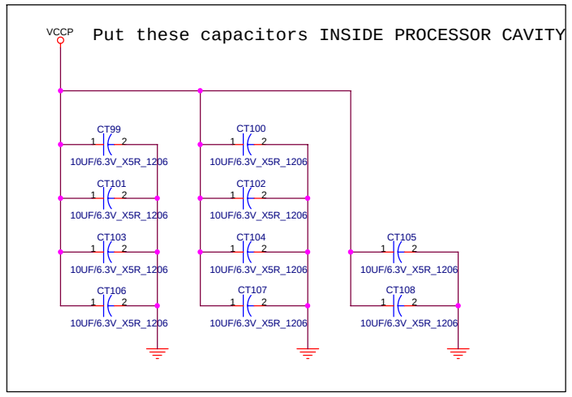

Thermal Sensor

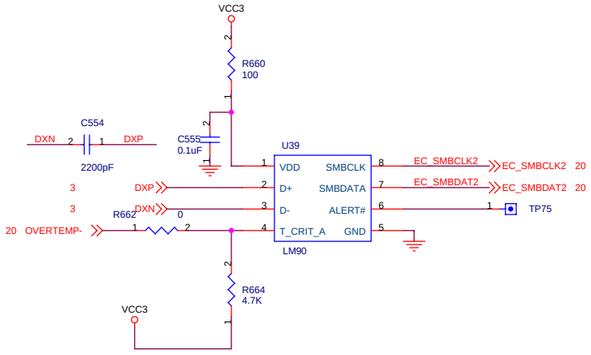

ECS CORP. (G733G M/B)		
Title: Pentium4_LGA775-3 & LM90		
Size: A2	Document Number: G733G-1-3-01	Rev: 4.0
Date: Wednesday, January 12, 2005	Sheet 4 of 39	

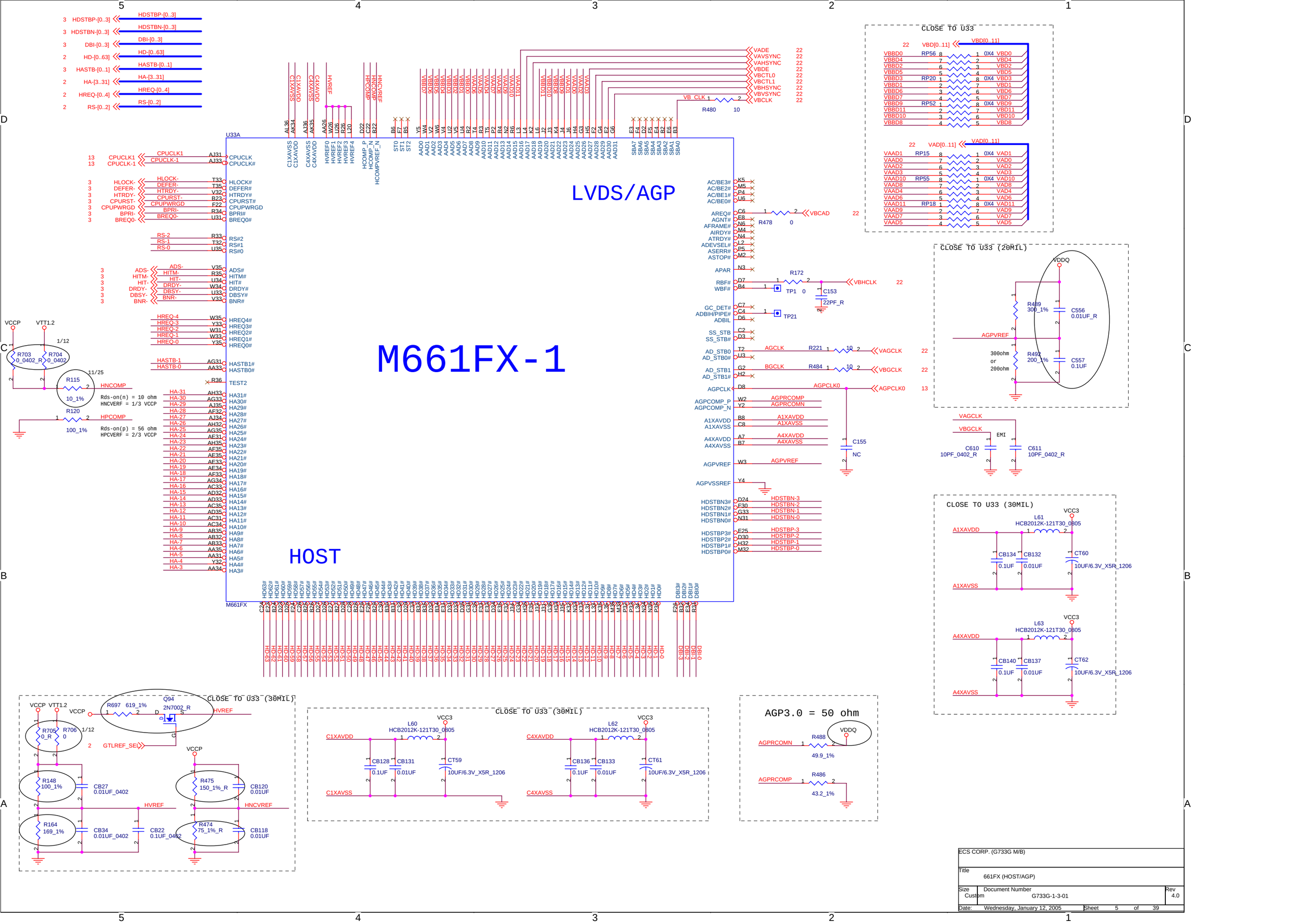

ECS CORP. (G733G M/B)	
Title	661FX (HOST/AGP)
Size: Custom	Document Number: G733G-1-3-01
Rev	4.0
Date: Wednesday, January 12, 2005	Sheet 5 of 39

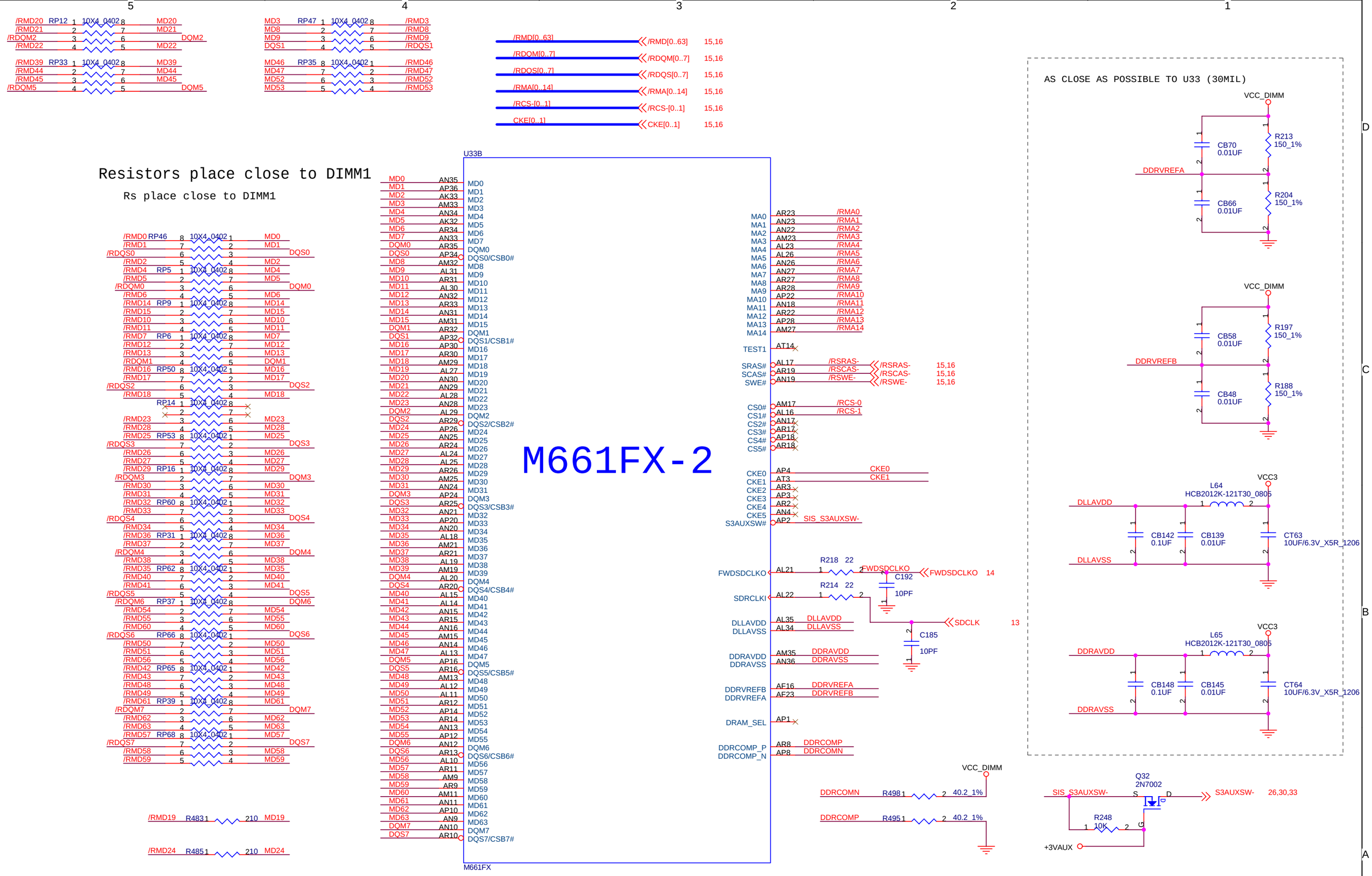
Resistors place close to DIMM1
Rs place close to DIMM1
M661FX-2
U33B
M661FX
AS CLOSE AS POSSIBLE TO U33 (30MIL)
VCC_DIMM
DDRVREFA
DDRVREFB
VCC3
DLLAVDD
DLLAVSS
DDRAVDD
DDRAVSS
FWDSDCLKO
SDCLK
DDRCOMN
DDRCOMP
SIS_S3AUXSW-
S3AUXSW-
+3VAUX
Q32
2N7002
ECS CORP. (G733G M/B)
Title
661FX (RAM CONTROLLER)
Size
A3
Document Number
G733G-1-3-01
Rev
4.0
Date: Wednesday, January 12, 2005
Sheet 6 of 39

		ENABLE	DISENABLE
RSYNC	VGA	1	0
LSYNC	PANEL LINK	1	0
CSYNC	VB	1	0

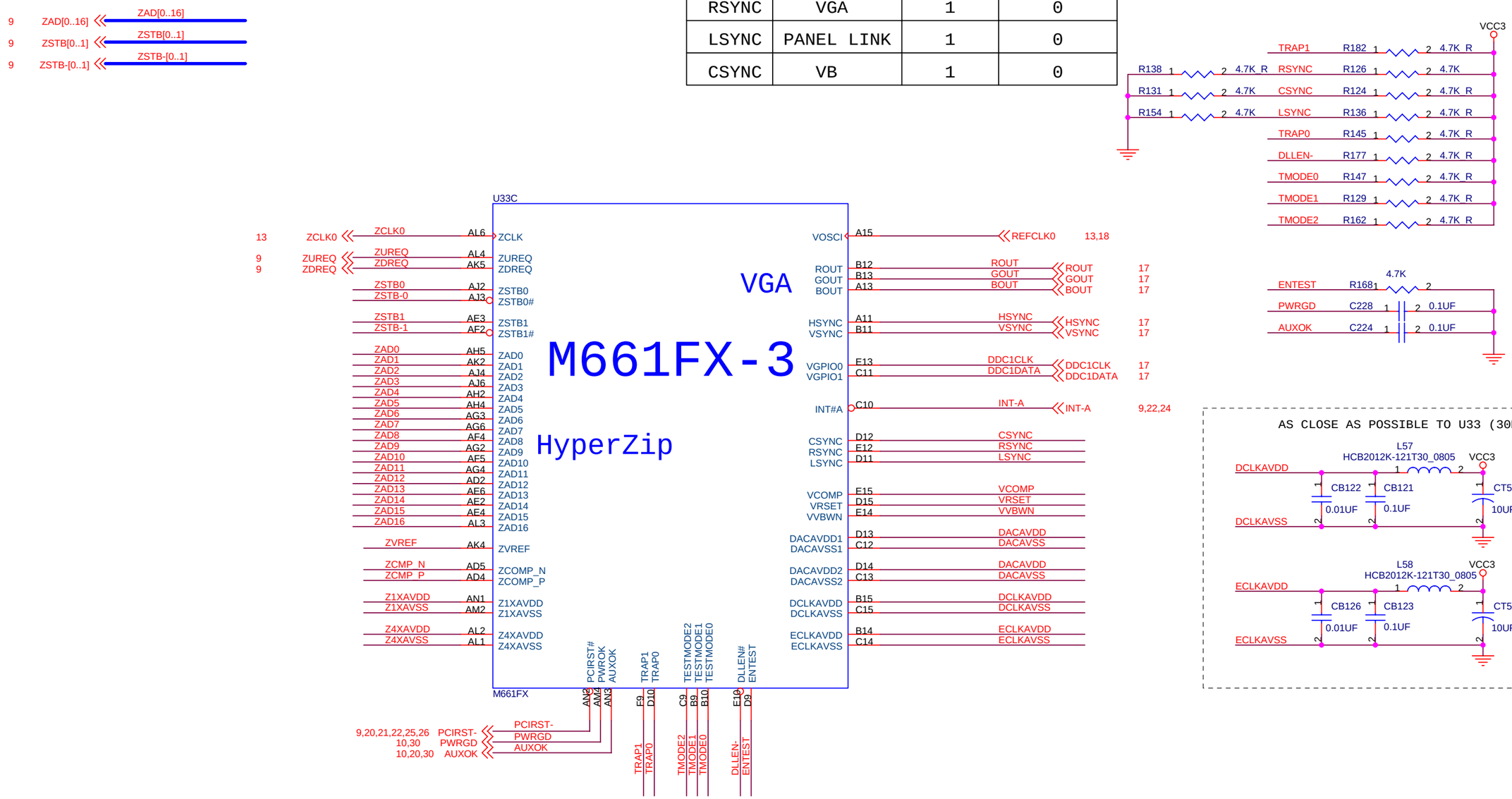

ECS CORP. (G733G M/B)

Title: 661FX (HYPERZIP/AGP)

Size: A3 | Document Number: G733G-1-3-01 | Rev: 4.0

Date: Wednesday, January 12, 2005 | Sheet 7 of 39

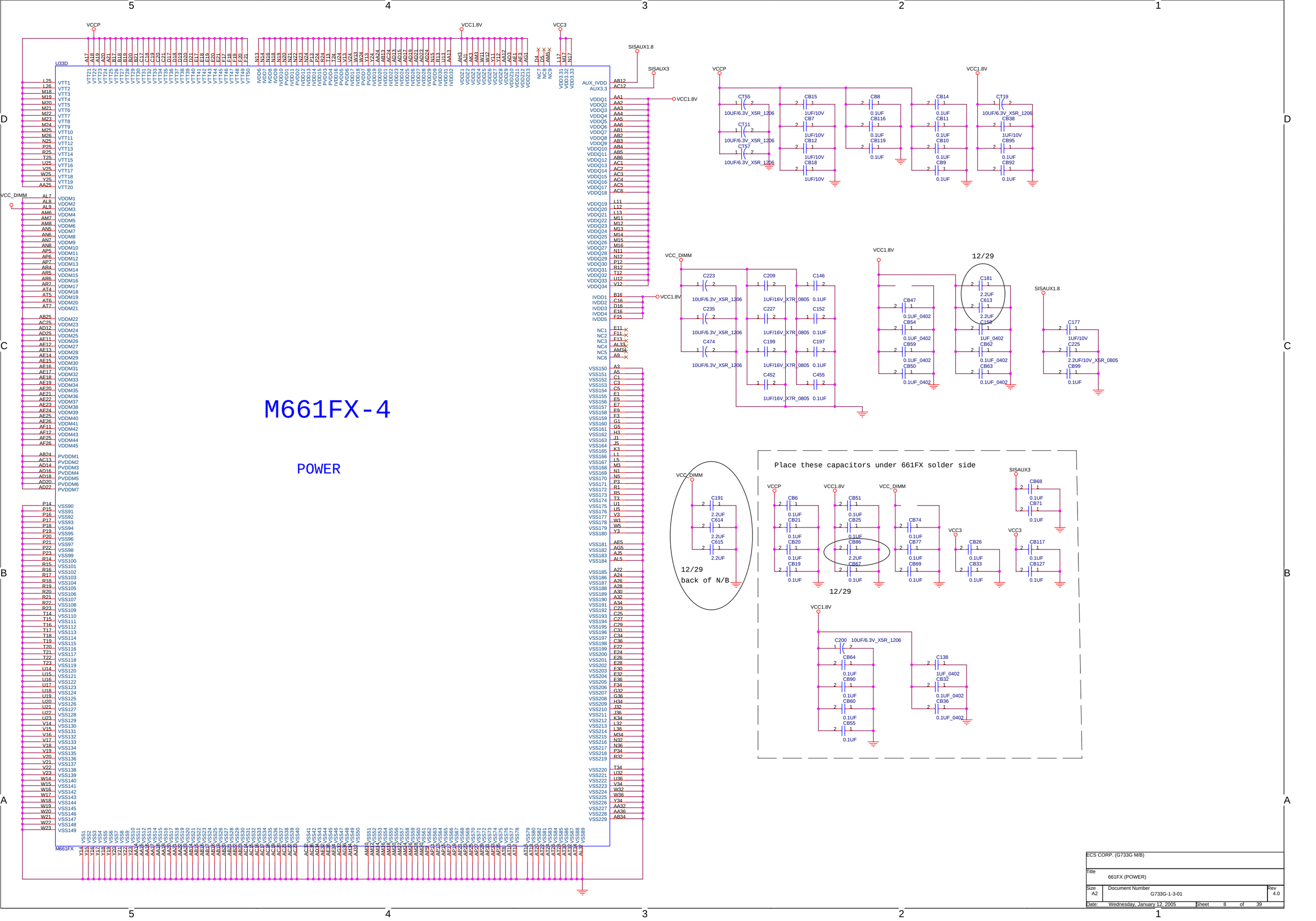

ECS CORP. (G733G M/B)	
Title	661FX (POWER)
Size A2	Document Number G733G-1-3-01
Rev	4.0
Date: Wednesday, January 12, 2005	Sheet 8 of 39

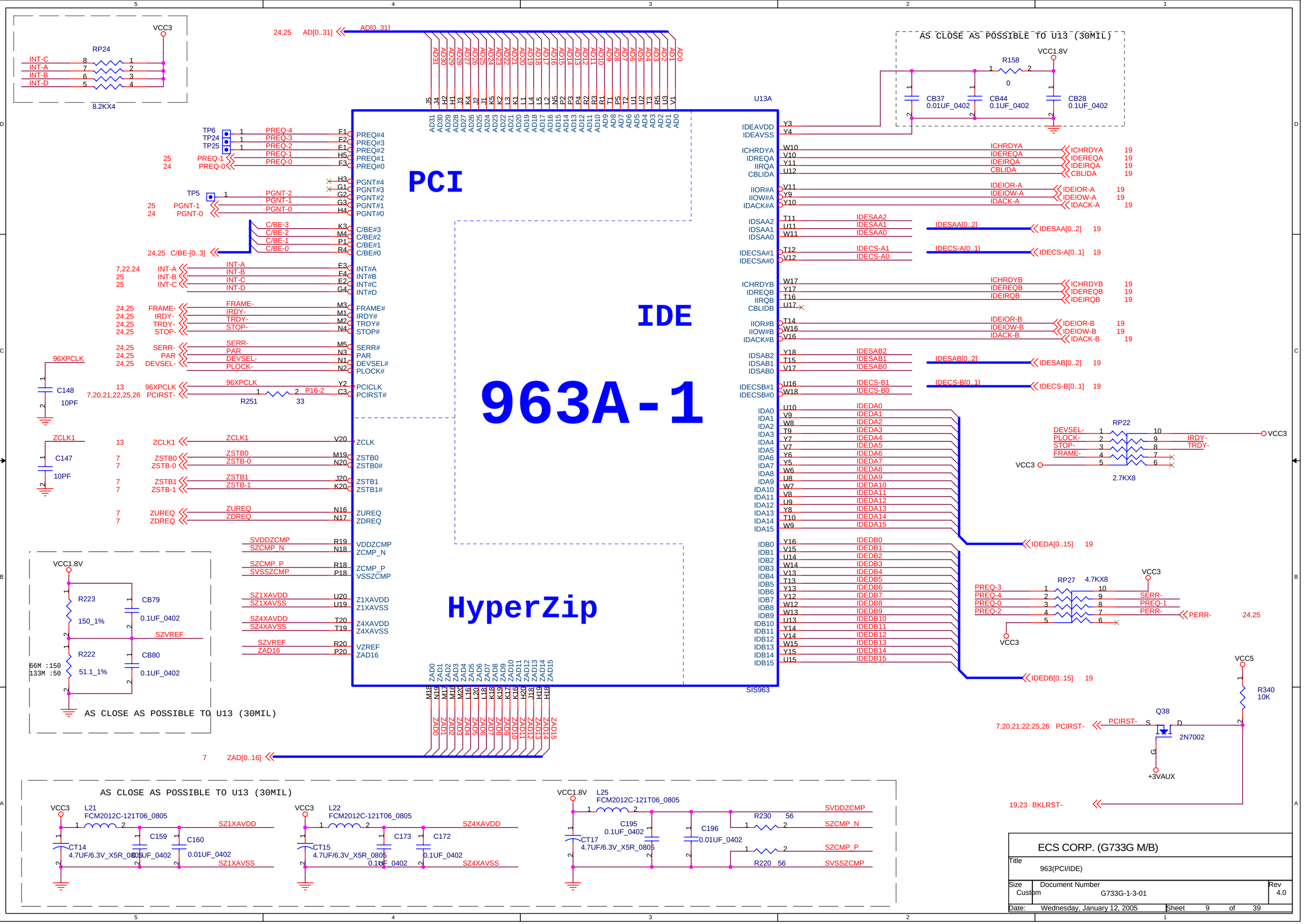

ECS CORP. (G733G M/B)

Title: 963(PCI/IDE)

Size: Custom | Document Number: G733G-1-3-01 | Rev: 4.0

Date: Wednesday, January 12, 2005 | Sheet 9 of 39

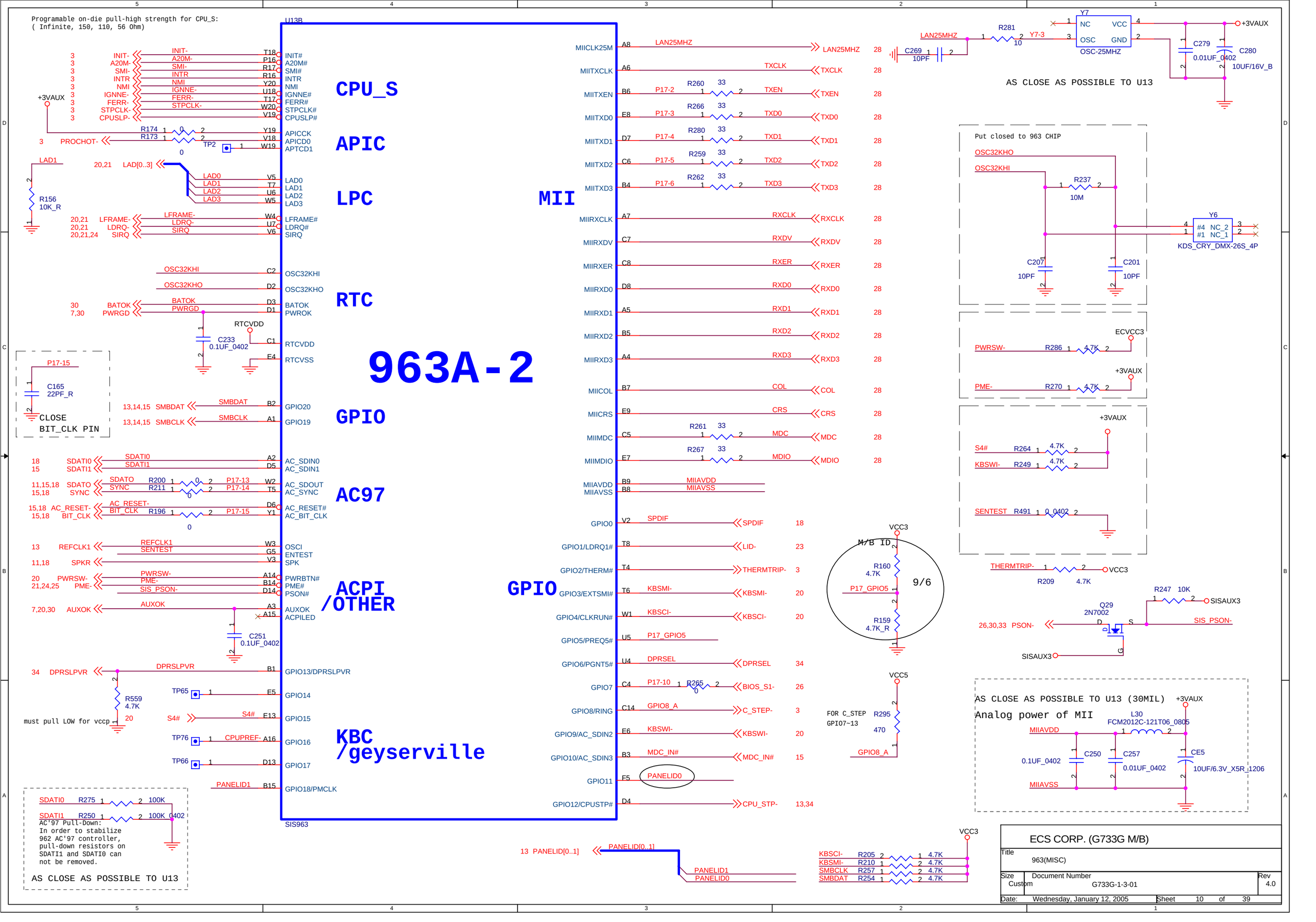

ECS CORP. (G733G M/B)

Title: 963(MISC)

Size: Custom | Document Number: G733G-1-3-01 | Rev: 4.0

Date: Wednesday, January 12, 2005 | Sheet 10 of 39

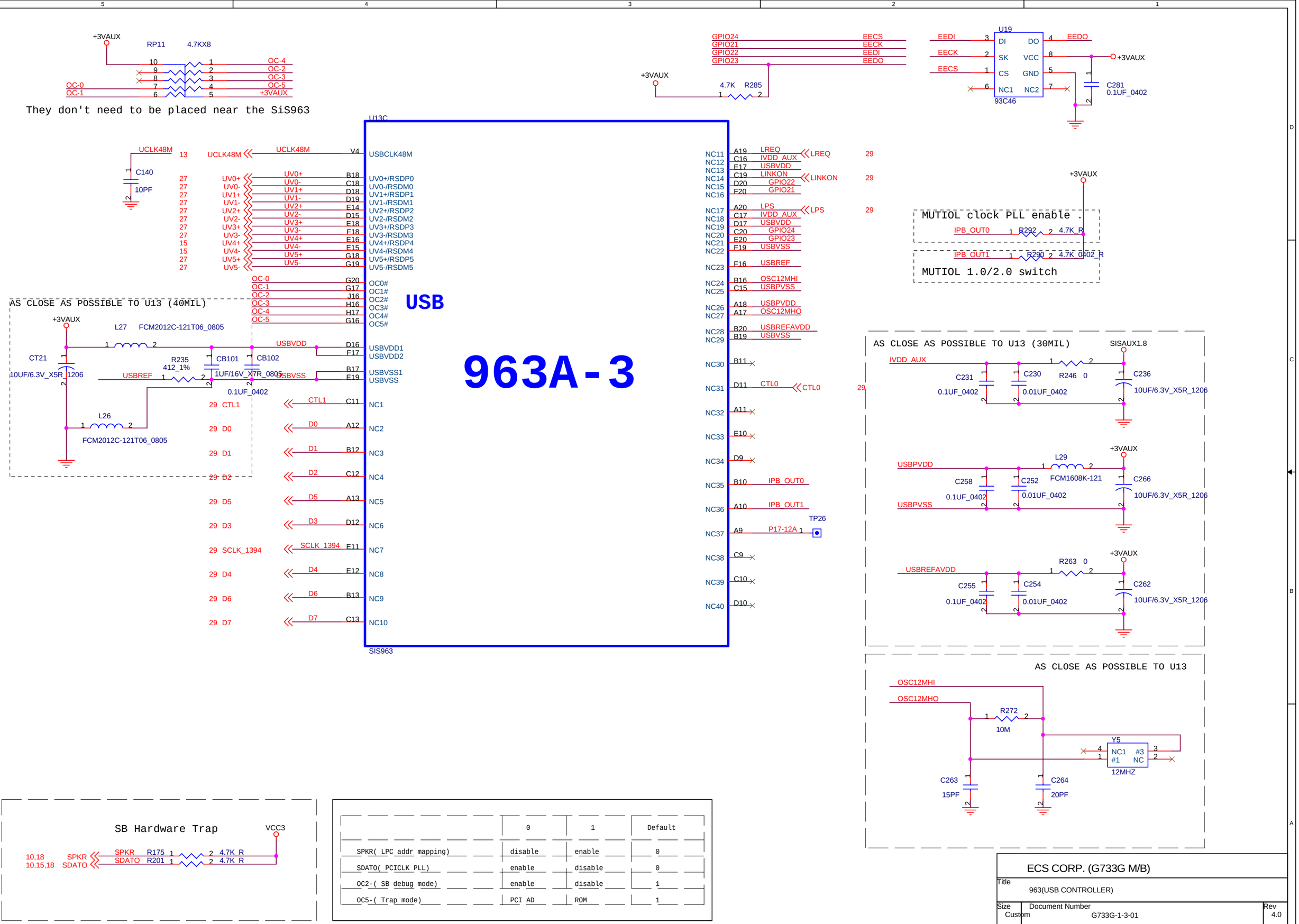

	0	1	Default
SPKR(LPC addr mapping)	disable	enable	0
SDATO(PCICLK PLL)	enable	disable	0
OC2-(SB debug mode)	enable	disable	1
OC5-(Trap mode)	PCI AD	ROM	1

ECS CORP. (G733G M/B)

Title: 963(USB CONTROLLER)

Size: Custom | Document Number: G733G-1-3-01 | Rev: 4.0

Date: Wednesday, January 12, 2005 | Sheet 11 of 39

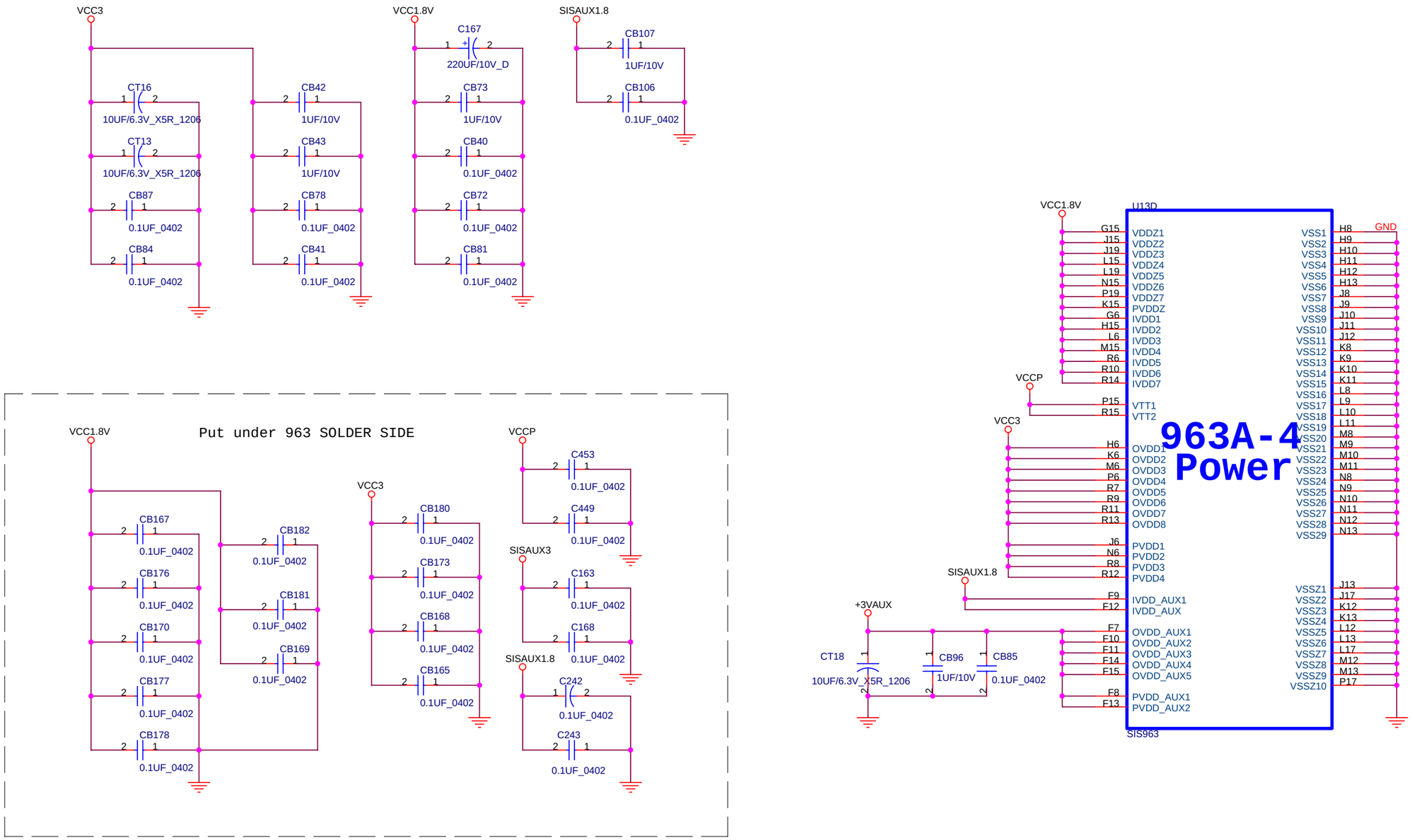

ECS CORP. (G733G M/B)			
Title 963(POWER)			
Size Custom	Document Number G733G-1-3-01		Rev 4.0
Date: Wednesday, January 12, 2005	Sheet 12 of 39		

Main Clock Generator

(3 OPTIONS)
1: (ICS)
2: (Cypress)
3. (Hitachi)

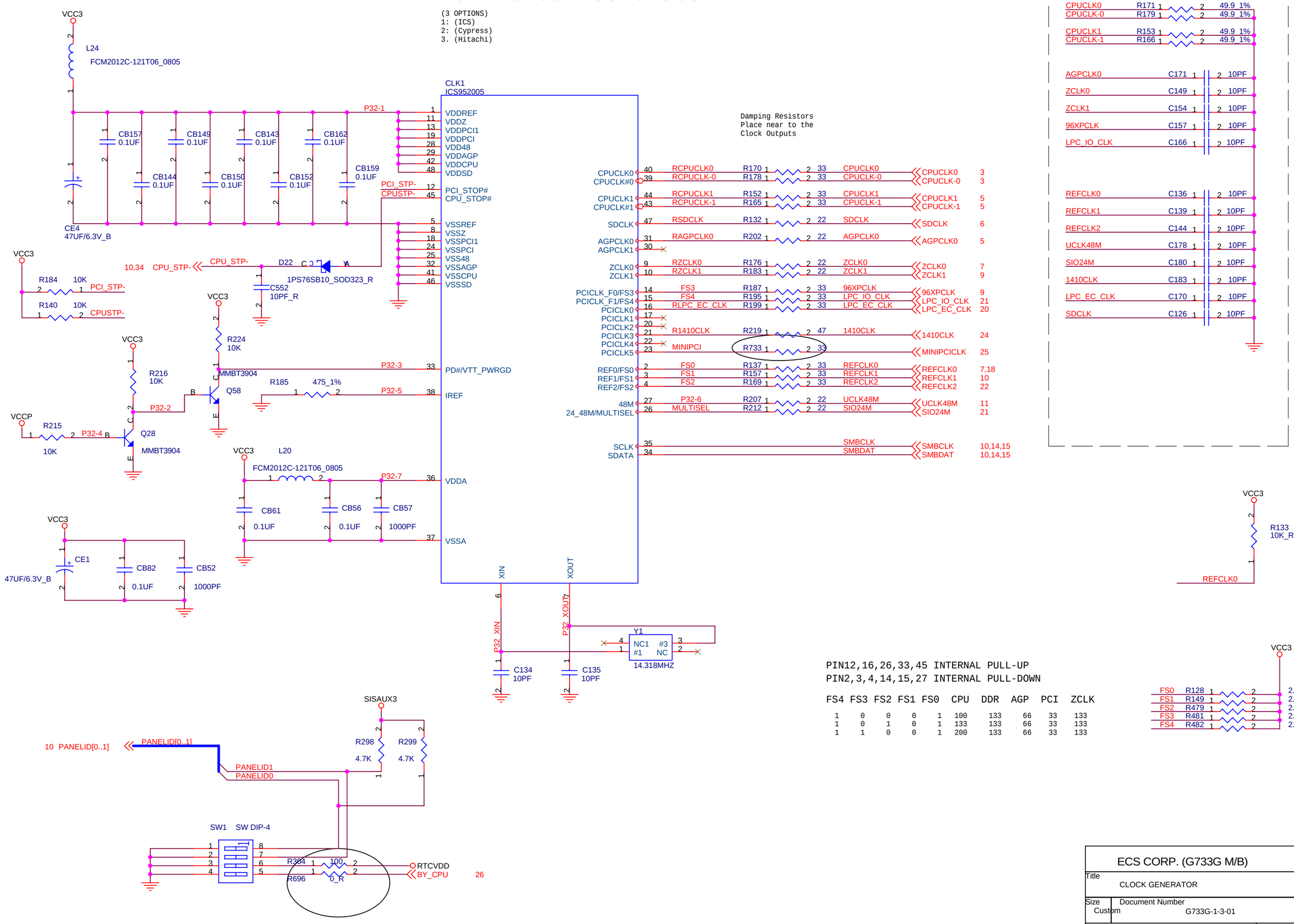

PIN12,16,26,33,45 INTERNAL PULL-UP
PIN2,3,4,14,15,27 INTERNAL PULL-DOWN

FS4	FS3	FS2	FS1	FS0	CPU	DDR	AGP	PCI	ZCLK
1	0	0	0	1	100	133	66	33	133
1	0	1	0	1	133	133	66	33	133
1	1	0	0	1	200	133	66	33	133

ECS CORP. (G733G M/B)

Title: CLOCK GENERATOR

Size: Custom | Document Number: G733G-1-3-01 | Rev: 4.0

Date: Wednesday, January 12, 2005 | Sheet 13 of 39

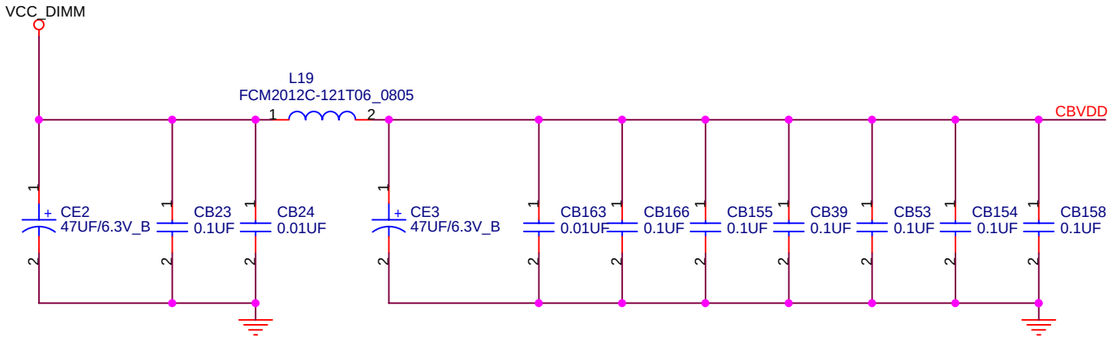

Clock Buffer (DDR)

(OPTIONS)
1: (ICS-93722)

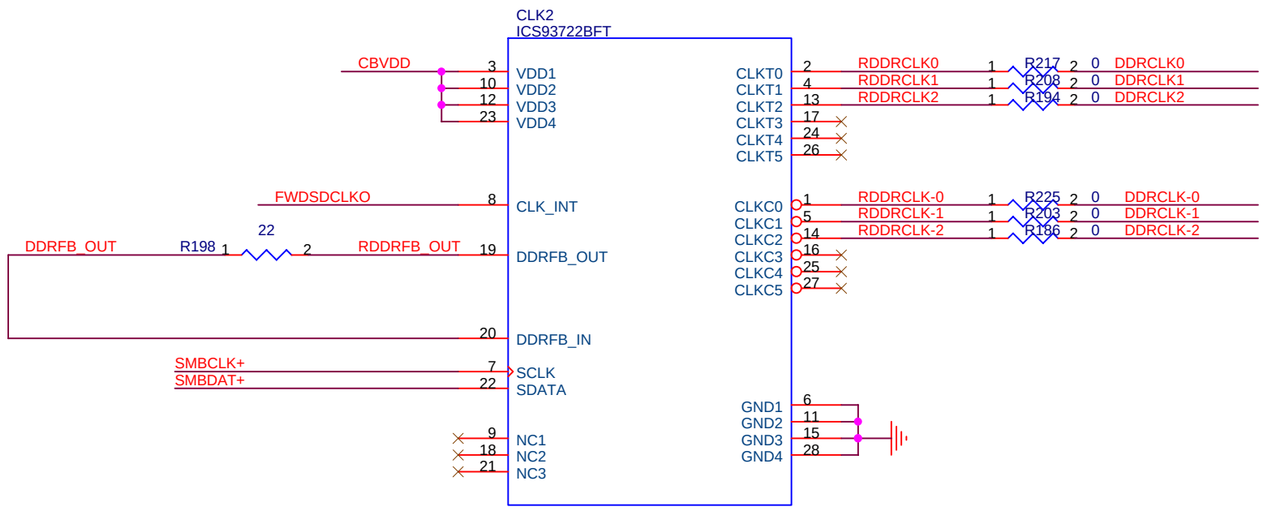

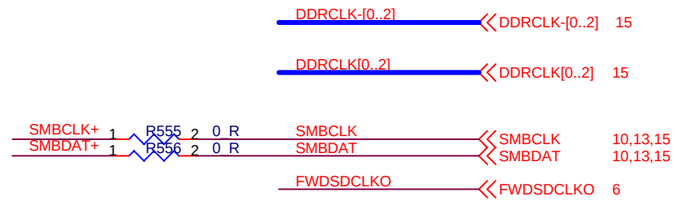

By-Pass Capacitors
Place near to the Clock Buffer

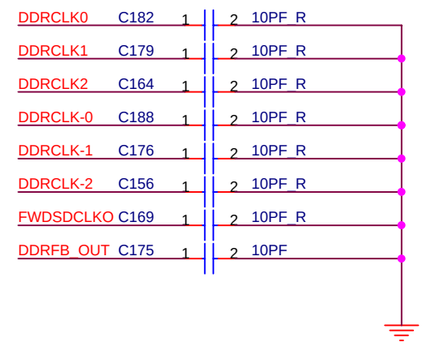

ECS CORP. (G733G M/B)

Title	CLOCK BUFFER FOR DDR	
Size B	Document Number G733G-1-3-01	Rev 4.0
Date: Wednesday, January 12, 2005	Sheet 14 of 39	

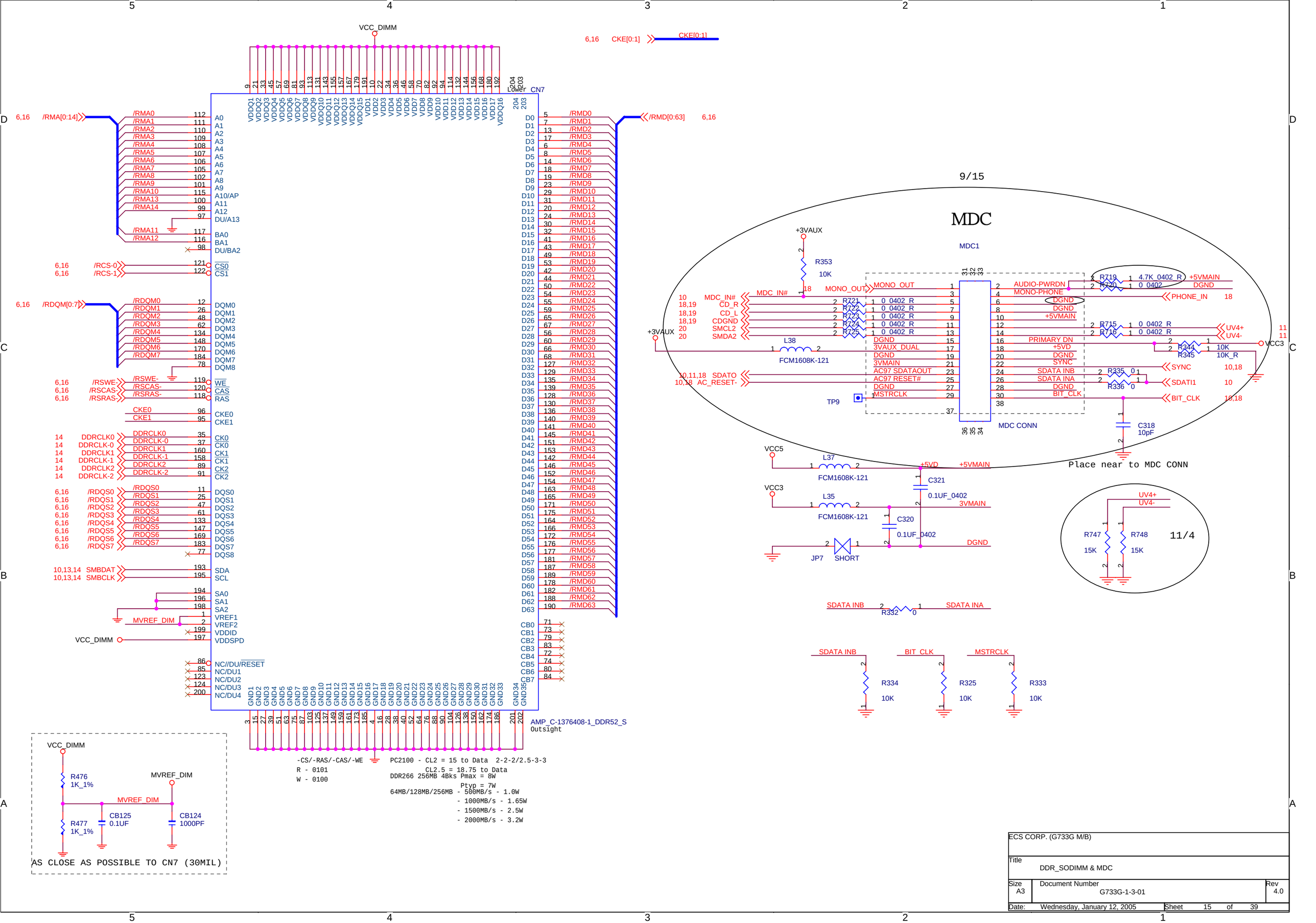

ECS CORP. (G733G M/B)	
Title	DDR_SODIMM & MDC
Size A3	Document Number G733G-1-3-01 — Rev 4.0
Date: Wednesday, January 12, 2005	Sheet 15 of 39

SSTL-2 Termination Resistors

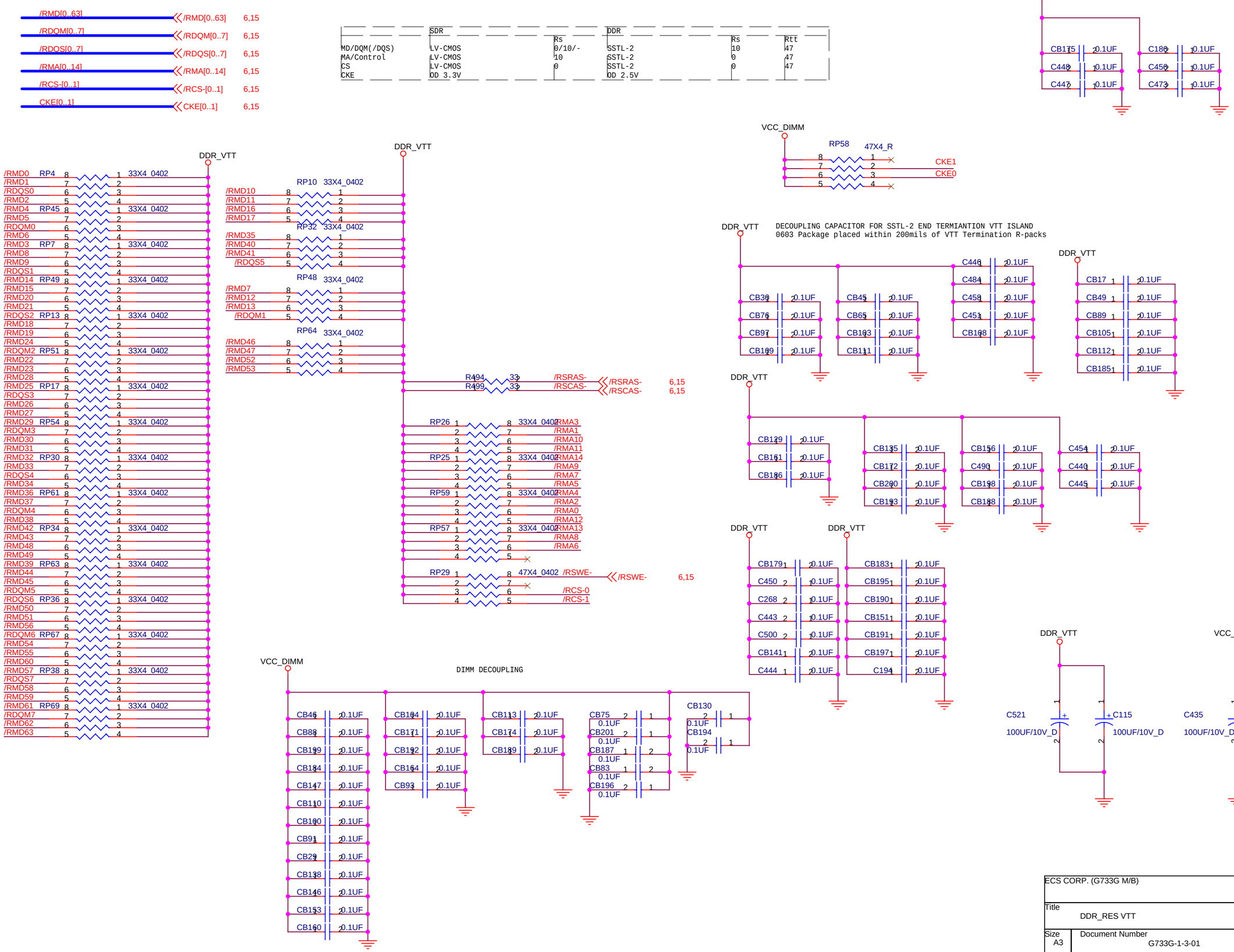

ECS CORP. (G733G M/B)	
Title	DDR_RES VTT
Size A3	Document Number G733G-1-3-01 Rev 4.0
Date: Wednesday, January 12, 2005	Sheet 16 of 39

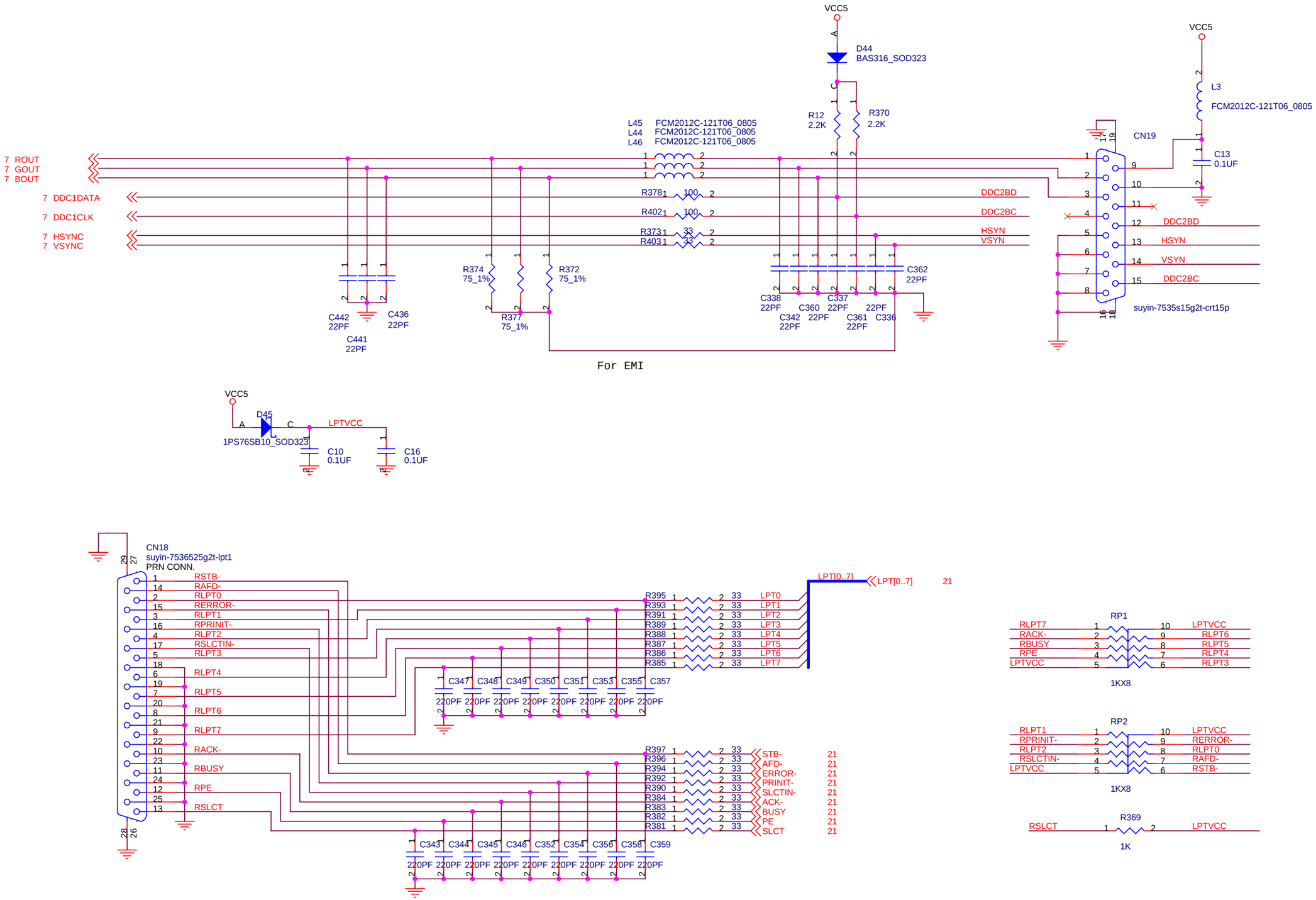

ECS CORP. (G733G M/B)		
Title: CRT & PRN CONN.		
Size: A3	Document Number: G733G-1-3-01	Rev: 4.0
Date: Wednesday, January 12, 2005	Sheet 17 of 39	

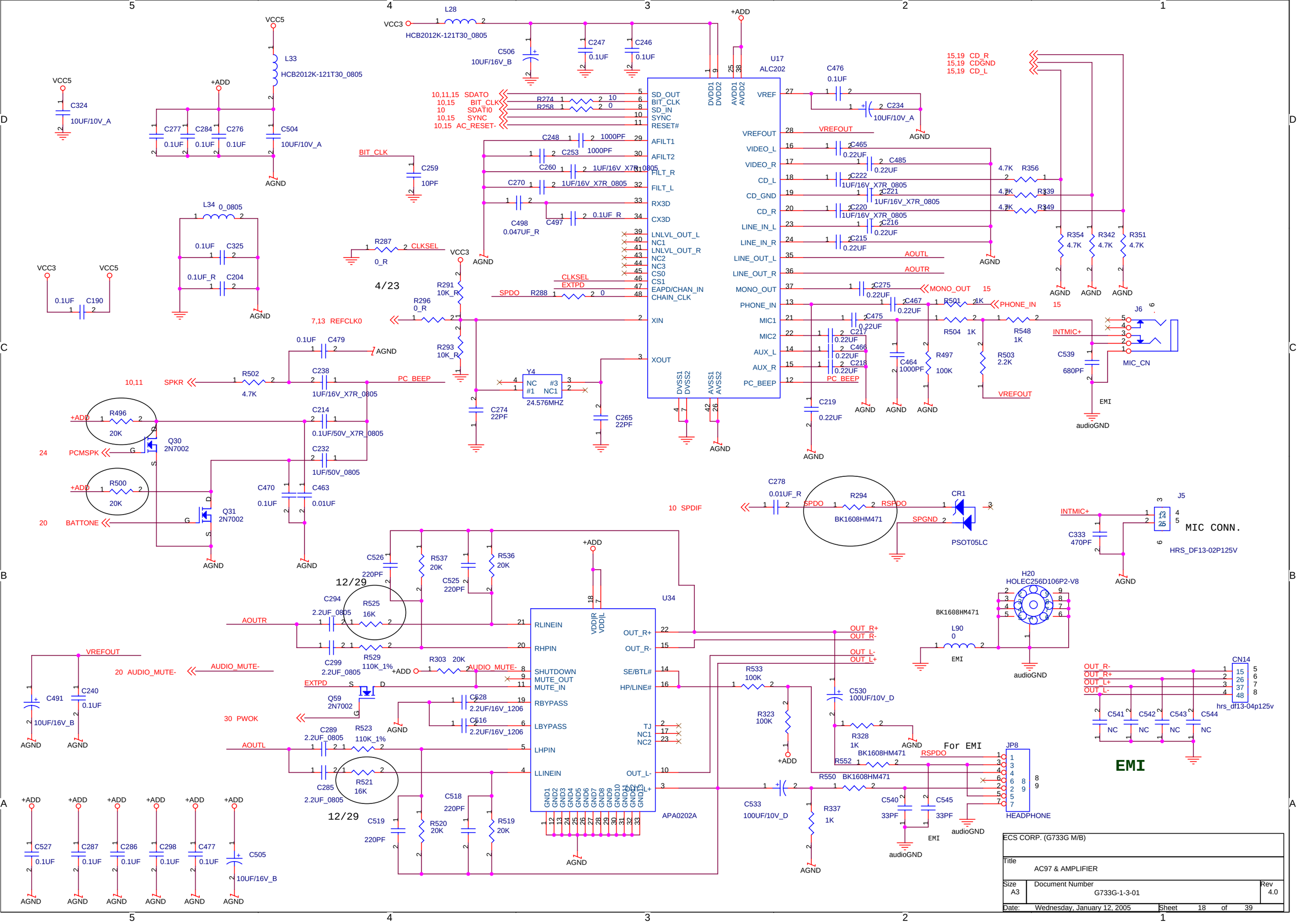
U17
ALC202
U34
APA0202A
Y4
24.576MHZ
Q30
2N7002
Q31
2N7002
Q59
2N7002
CR1
PSOT05LC
J5
MIC CONN.
HRS_DF13-02P125V
J6
MIC_CN
H20
HOLEC256D106P2-V8
CN14
hrs_df13-04p125v
JP8
HEADPHONE
For EMI
EMI
audioGND
AGND
VCC5
VCC3
+ADD
4/23
12/29
12/29
ECS CORP. (G733G M/B)
Title
AC97 & AMPLIFIER
Size
A3
Document Number
G733G-1-3-01
Rev
4.0
Date: Wednesday, January 12, 2005
Sheet 18 of 39

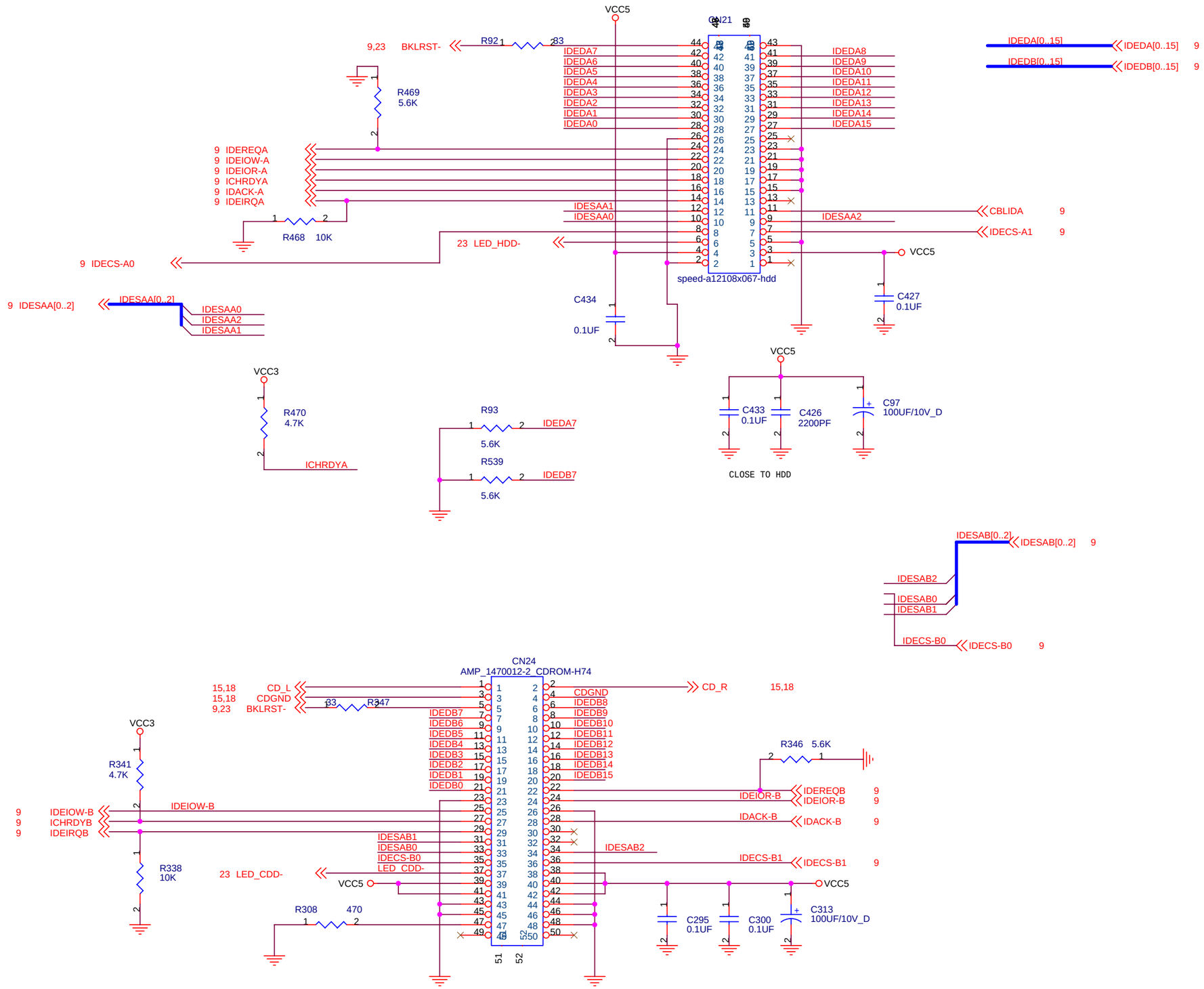

ECS CORP. (G733G M/B)		
Title: HDD & CD-ROM CONN.		
Size: A3	Document Number: G733G-1-3-01	Rev: 4.0
Date: Wednesday, January 12, 2005	Sheet 19 of 39	

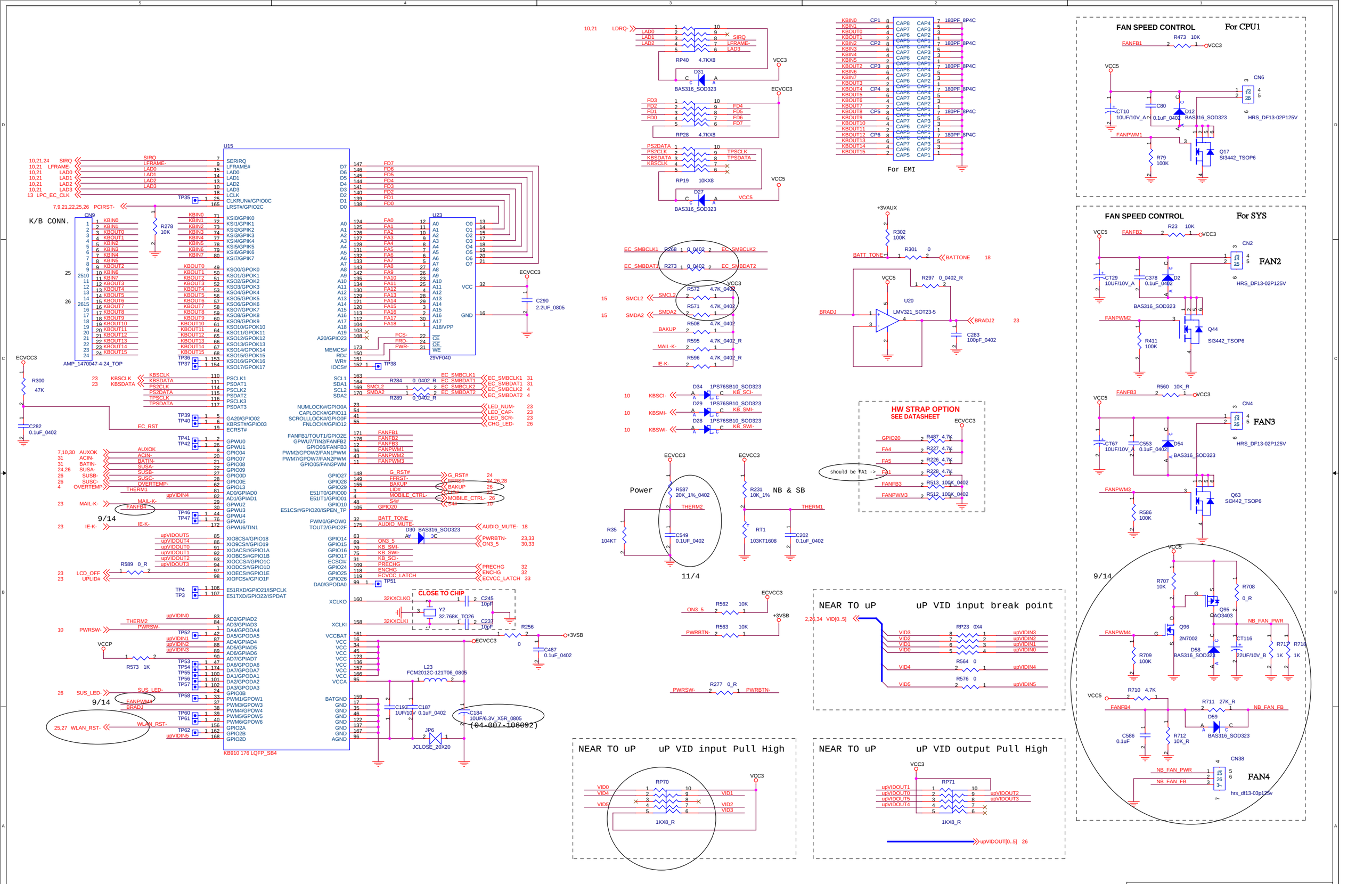

ECS CORP. (G733G M/B)	
Title	KEYBOARD CONTROLLER
Size A2	Document Number G733G-1-3-01
Rev	4.0
Date: Wednesday, January 12, 2005	Sheet 20 of 39

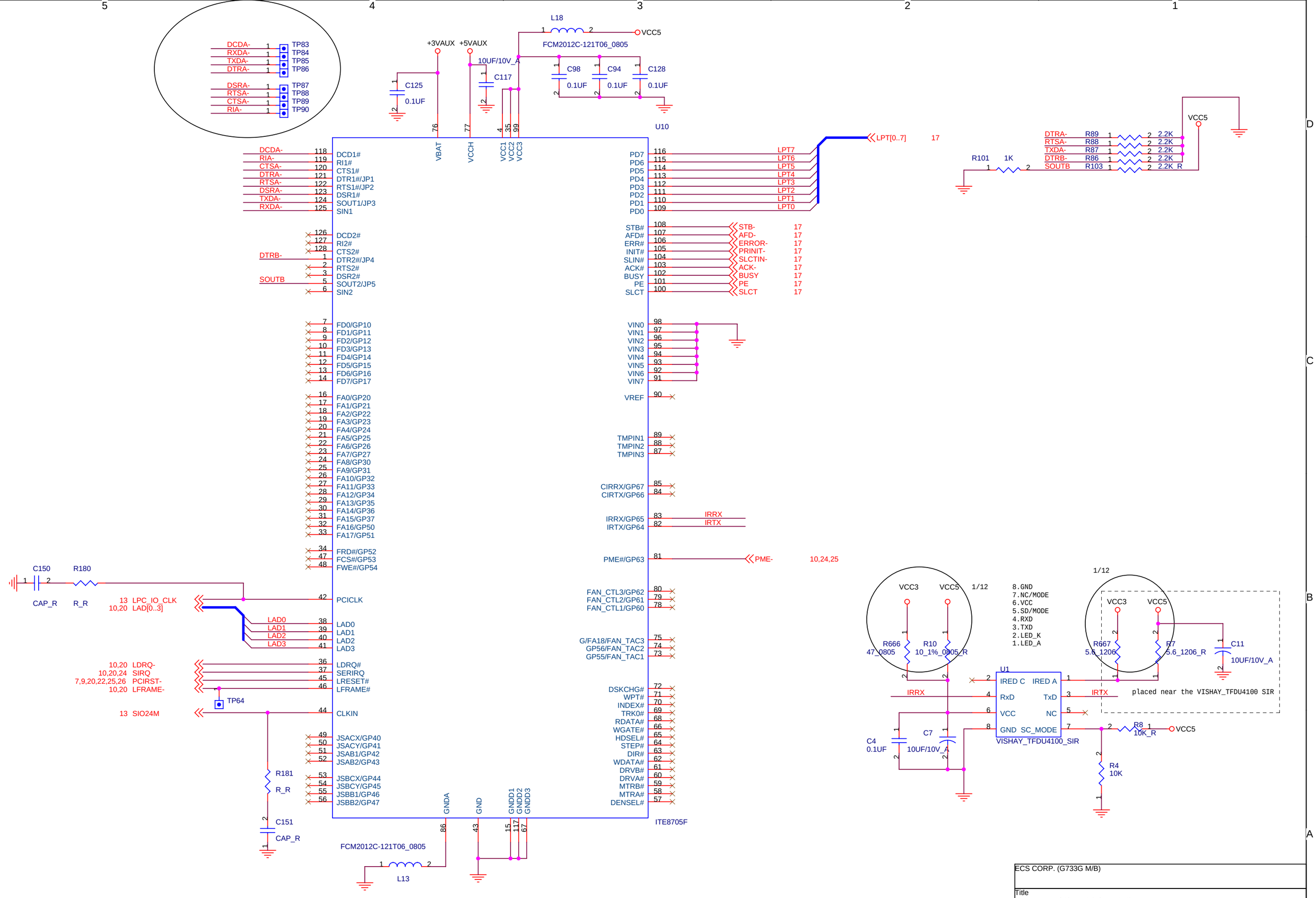

ECS CORP. (G733G M/B)		
Title: ITE8705F LPC SUPER IO		
Size: A3	Document Number: G733G-1-3-01	Rev: 4.0
Date: Wednesday, January 12, 2005	Sheet 21 of 39	

CHOOSE CLOCK SOURCE		
CLOCK SOURCE	CLOCK GEN	CRYSTAL
R466	10	NC
R467	NC	10

R143 PFTEST0	VDDQ
NC	3.3V
4.7K	1.8V

NOTE:
LXC2+,LXC2-,LX7+,LX7-,LX6+,LX6-,LX5+,LX5-
LX4+,LX4- are 302LV LVDS dual link signals

FOR 302LV

For EMI

ECS CORP. (G733G M/B)

Title: LVDS INTERFACE (SIS302LV)

Size: A3 | Document Number: G733G-1-3-01 | Rev: 4.0

Date: Wednesday, January 12, 2005 | Sheet 22 of 39

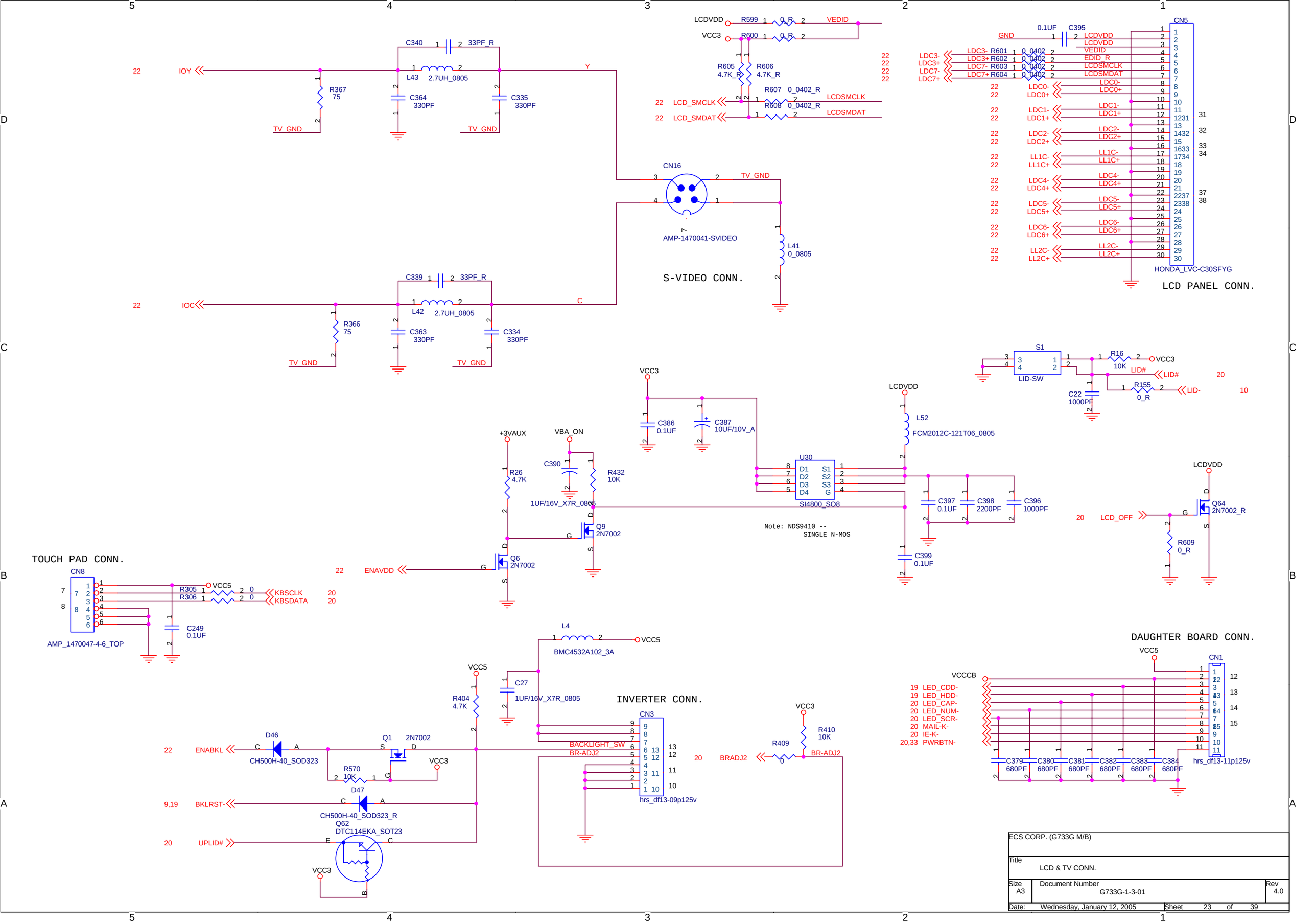
S-VIDEO CONN.
LCD PANEL CONN.
TOUCH PAD CONN.
INVERTER CONN.
DAUGHTER BOARD CONN.
AMP-1470041-SVIDEO
HONDA_LVC-C30SFYG
AMP_1470047-4-6_TOP
hrs_df13-09p125v
hrs_df13-11p125v
SI4800_SO8
LID-SW
Note: NDS9410 -- SINGLE N-MOS
ECS CORP. (G733G M/B)
Title
LCD & TV CONN.
Size A3
Document Number G733G-1-3-01
Rev 4.0
Date: Wednesday, January 12, 2005
Sheet 23 of 39

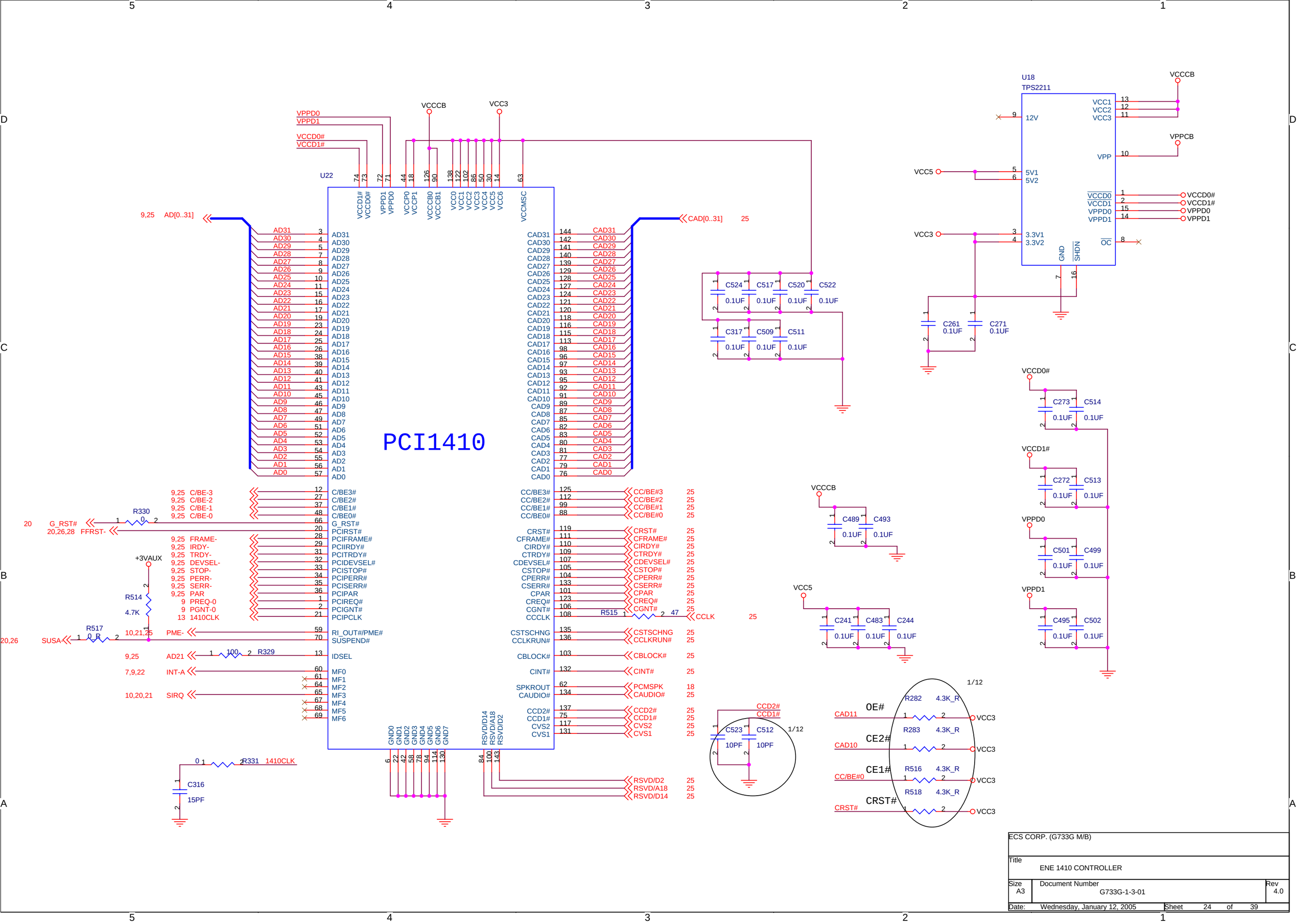

ECS CORP. (G733G M/B)	
Title	ENE 1410 CONTROLLER
Size A3	Document Number G733G-1-3-01 Rev 4.0
Date: Wednesday, January 12, 2005	Sheet 24 of 39

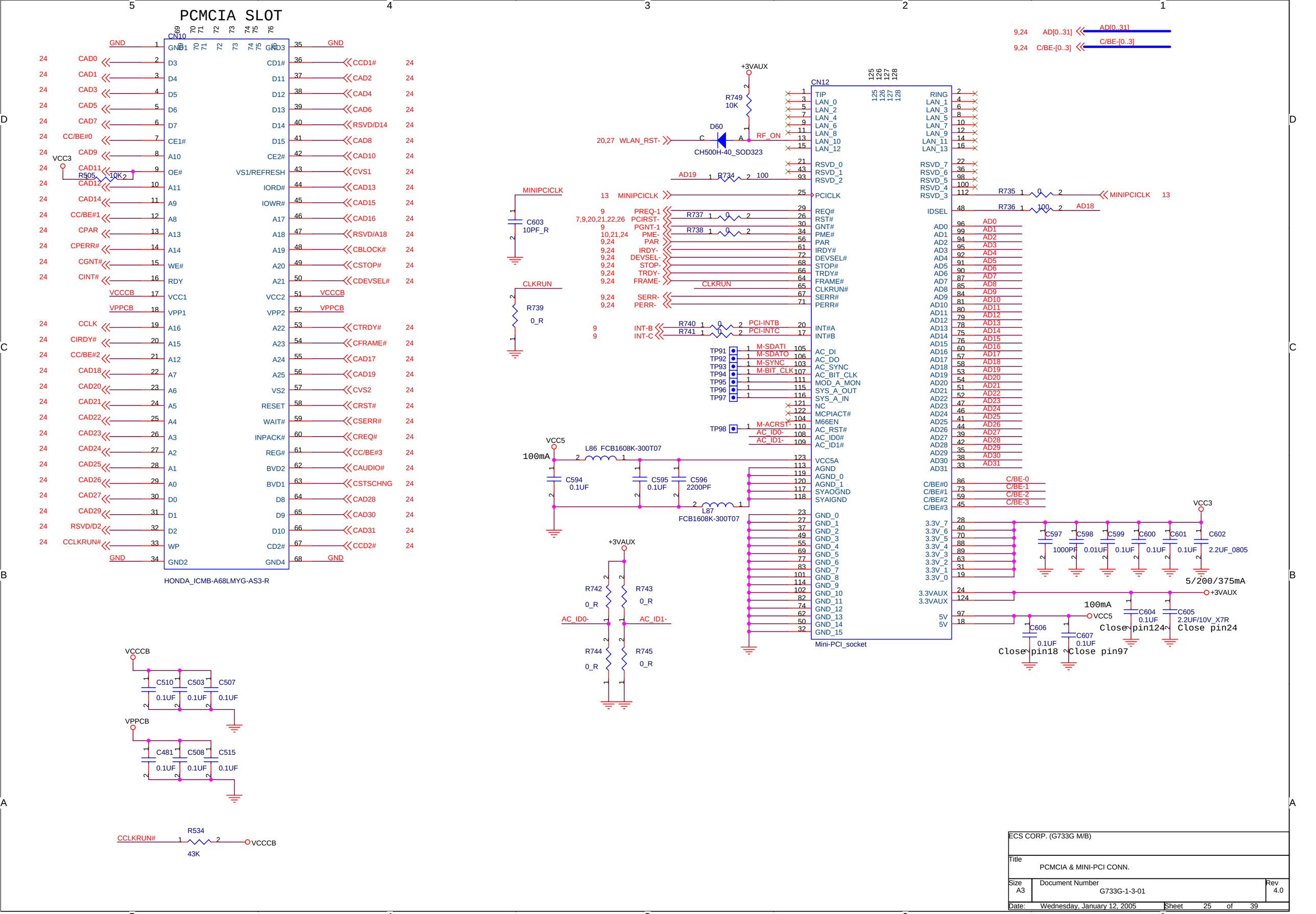

ECS CORP. (G733G M/B)	
Title	PCMCIA & MINI-PCI CONN.
Size A3	Document Number G733G-1-3-01 — Rev 4.0
Date: Wednesday, January 12, 2005	Sheet 25 of 39

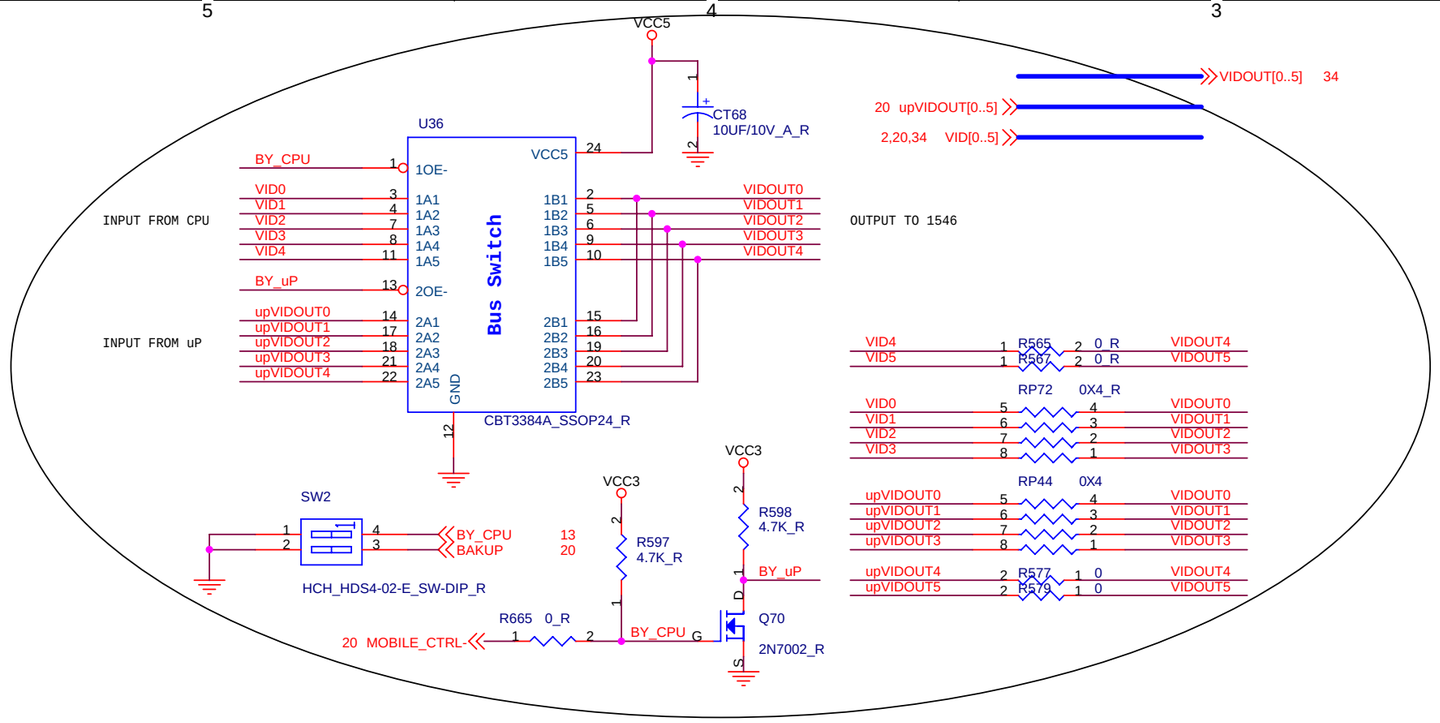

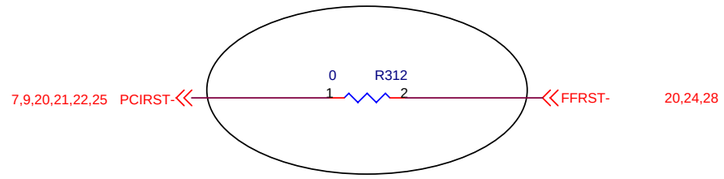

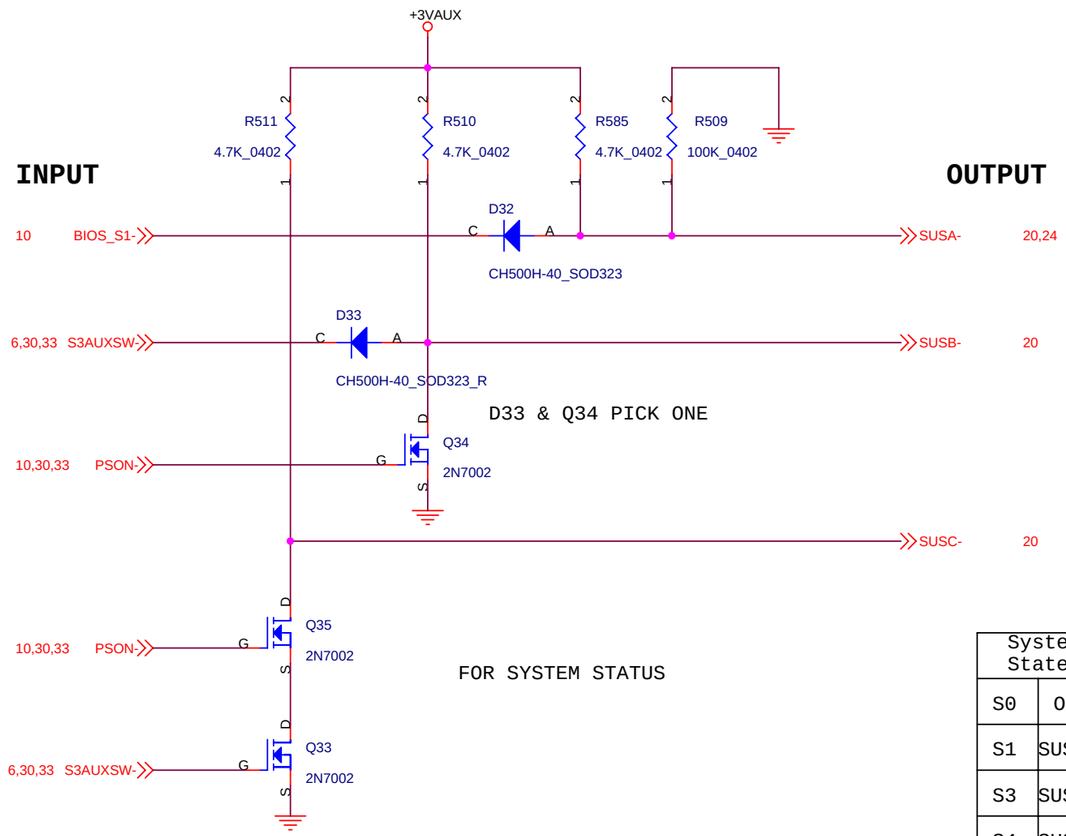

System State		BIOS_SI-	PSON-	S3AUXSW-	S4-
S0	ON	H	L	H	H
S1	SUSA#	L	L	H	H
S3	SUSB#	X	H	L	H
S4	SUSC#	X	H	H	L
S5	OFF	X	H	H	H

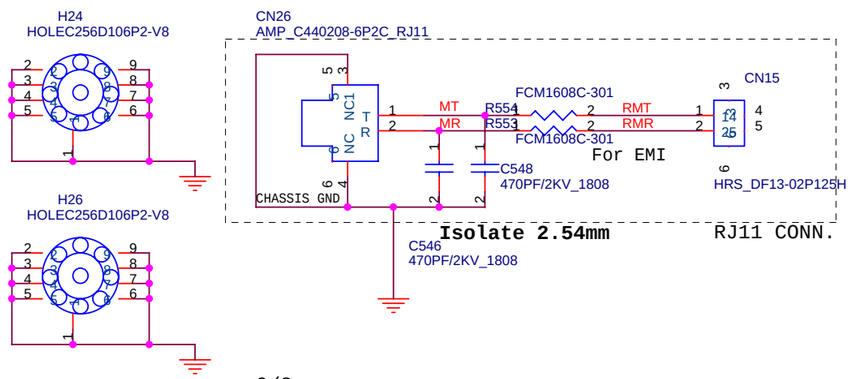

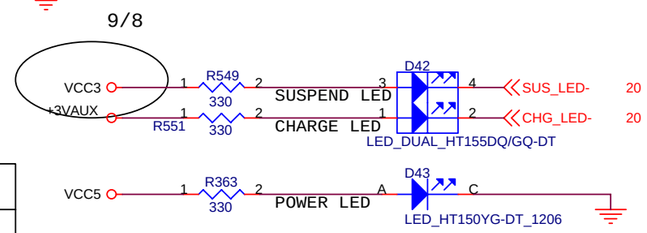

ECS CORP. (G733G M/B)

Title: POWER SWITCH

Size: A3 | Document Number: G733G-1-3-01 | Rev: 4.0

Date: Wednesday, January 12, 2005 | Sheet 26 of 39

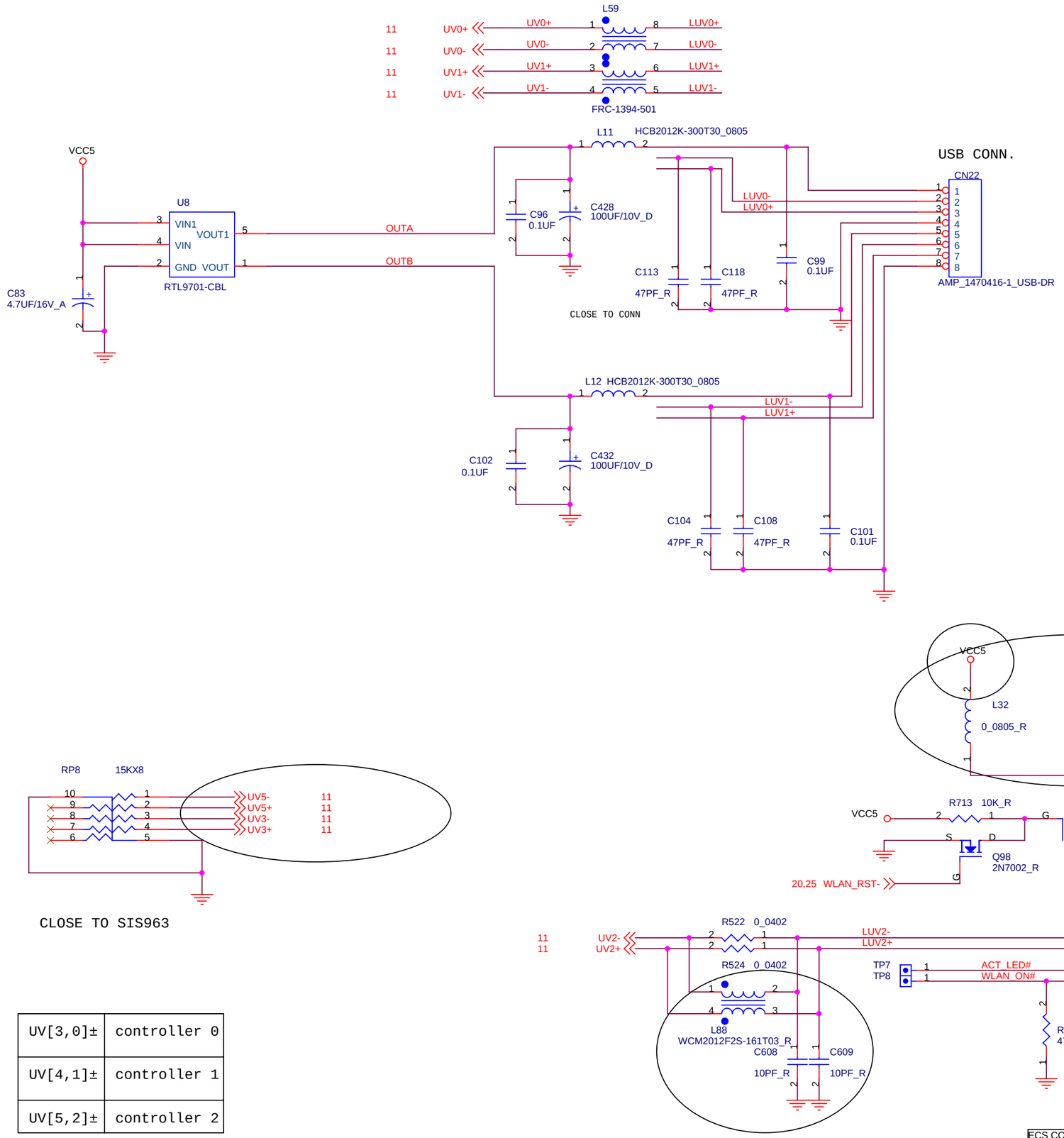

UV[3,0]±	controller 0
UV[4,1]±	controller 1
UV[5,2]±	controller 2

ECS CORP. (G733G M/B)

Title: USB PORT & USBLAN

Size: A3 | Document Number: G733G-1-3-01 | Rev: 4.0

Date: Wednesday, January 12, 2005 | Sheet 27 of 39

RTL8201

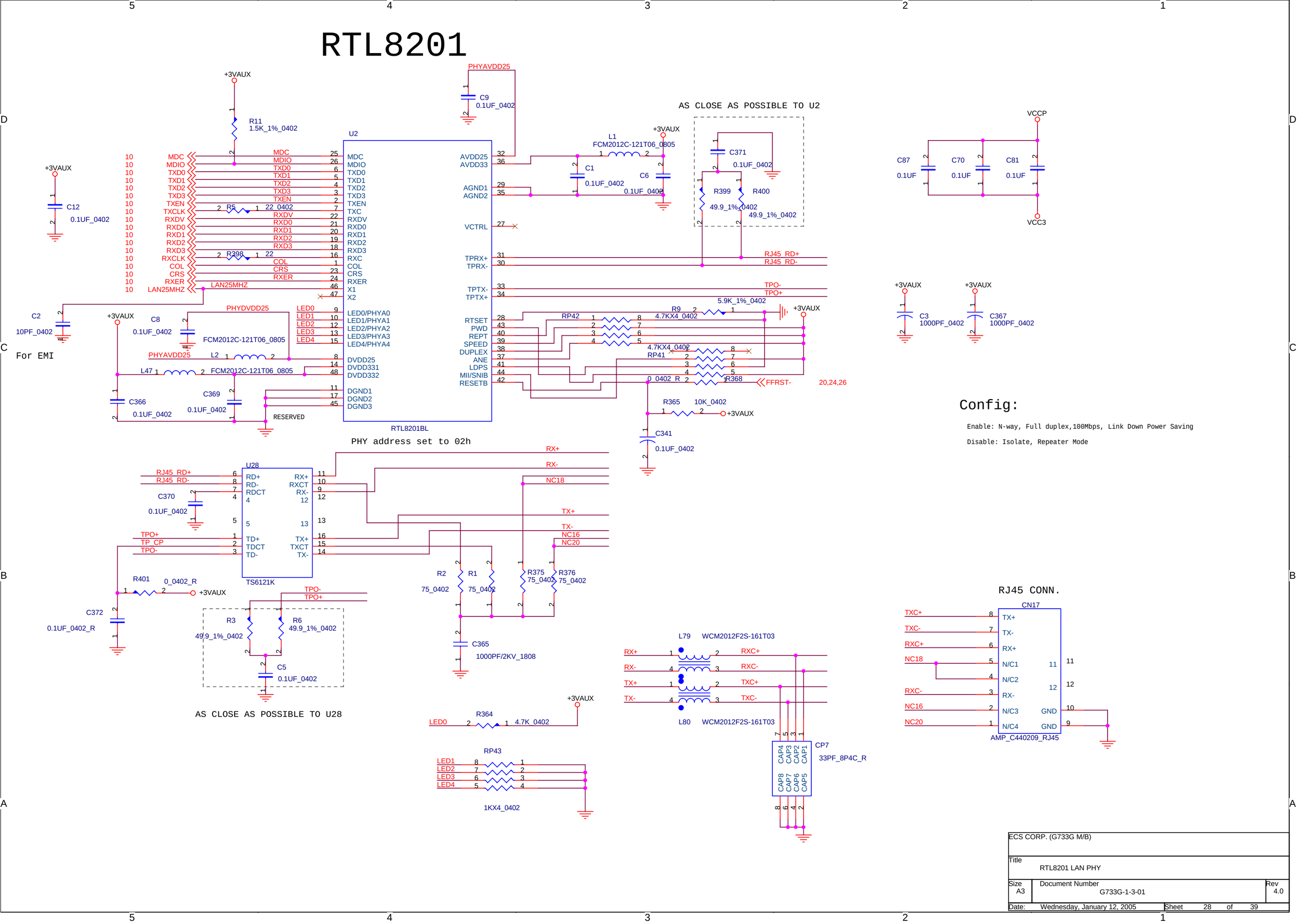

ECS CORP. (G733G M/B)	
Title	RTL8201 LAN PHY
Size A3	Document Number G733G-1-3-01 — Rev 4.0
Date: Wednesday, January 12, 2005	Sheet 28 of 39

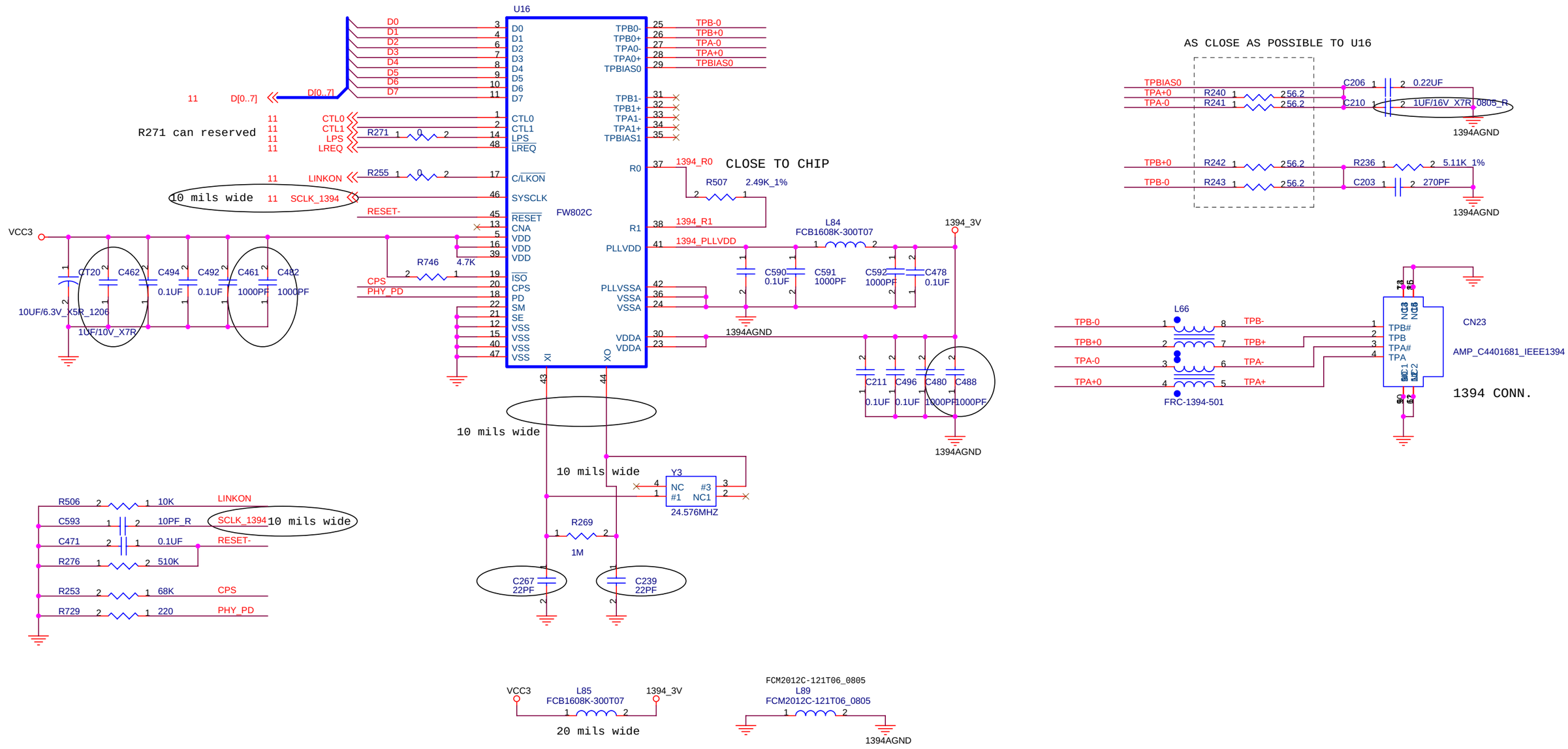

ECS CORP. (G733G M/B)			
Title	AgereFW802C 1394 PHY		
Size A3	Document Number G733G-1-3-01		Rev 4.0
Date: Wednesday, January 12, 2005	Sheet 29 of 39		

RTC

NOTE!
1.The RTCVDD is 3V
2.Decoupling capacitor must be close to 661 RTCVDD pin.
3.RTC circuit must strictly follow SiS's recommended design
  SiS is not responsible for RTC problems from foreign designs.

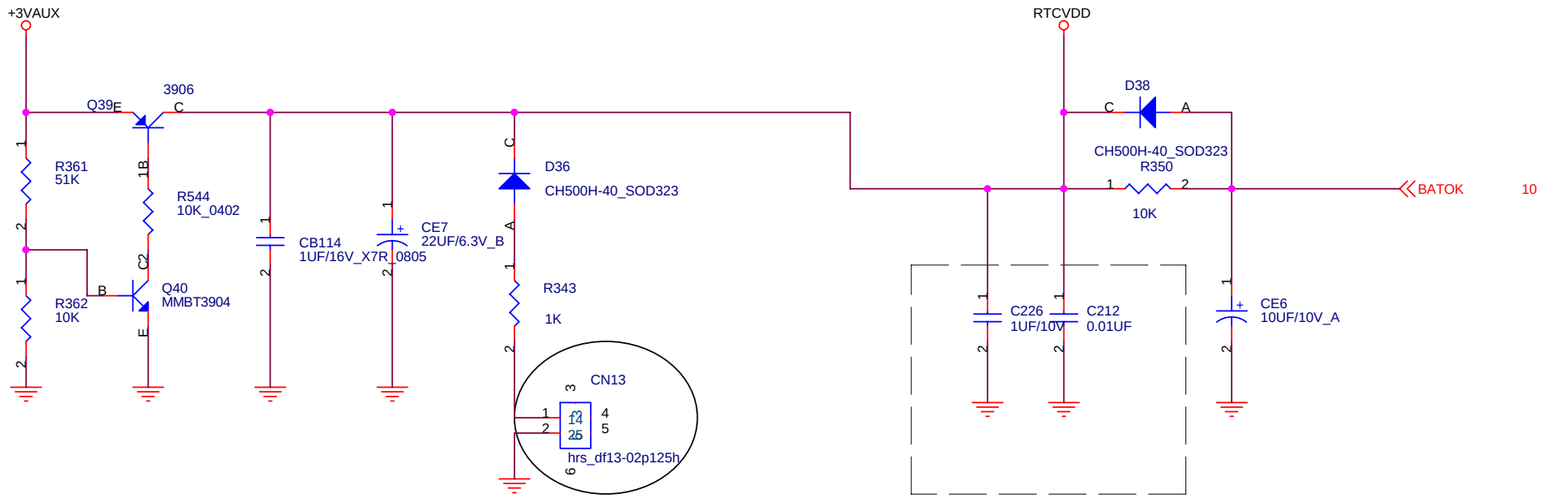

CONN---> LONGTRUMP_BH-8009G_RTC

Place close to 963

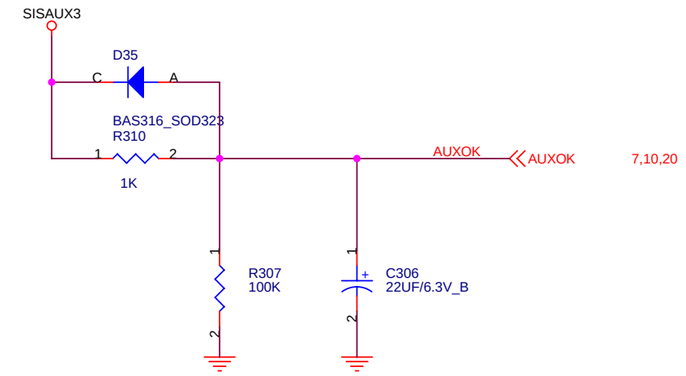

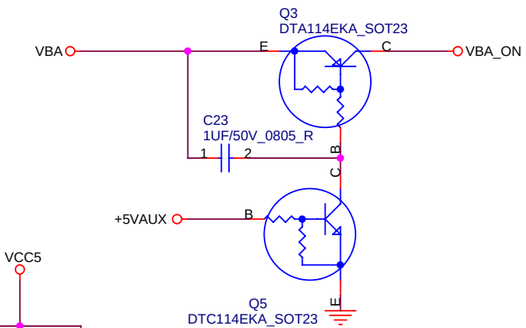

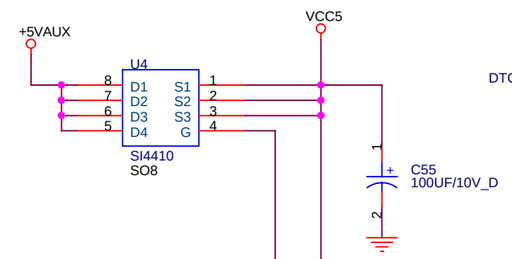

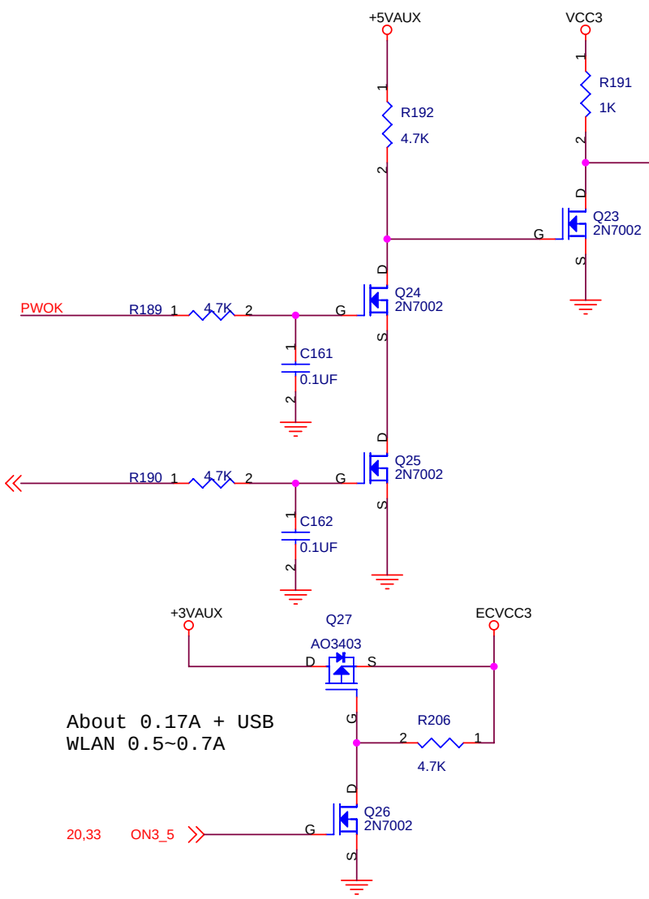

About 0.17A + USB
WLAN 0.5~0.7A

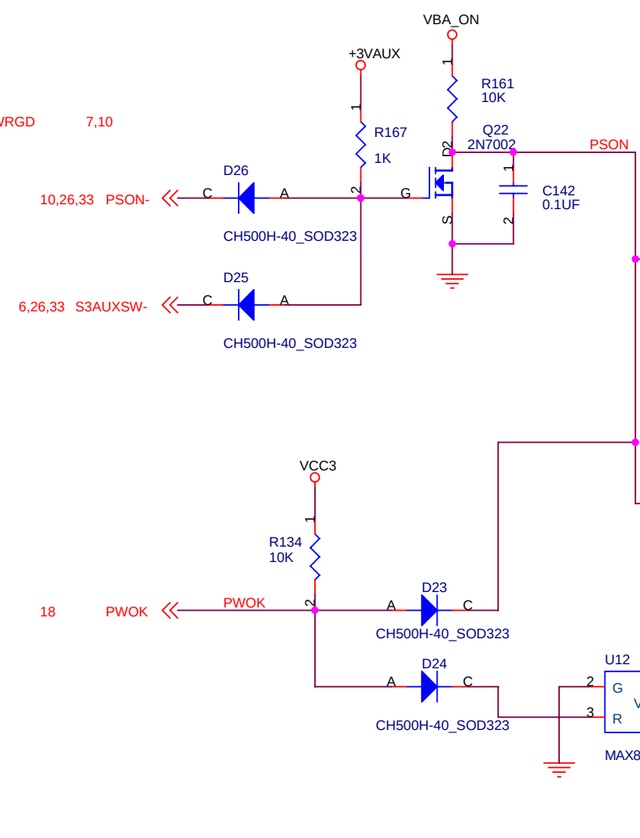

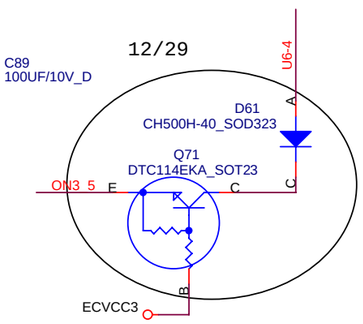

ECS CORP. (G733G M/B)		
Title: RTC & POWER SW		
Size: A3	Document Number: G733G-1-3-01	Rev: 4.0
Date: Wednesday, January 12, 2005	Sheet 30 of 39	

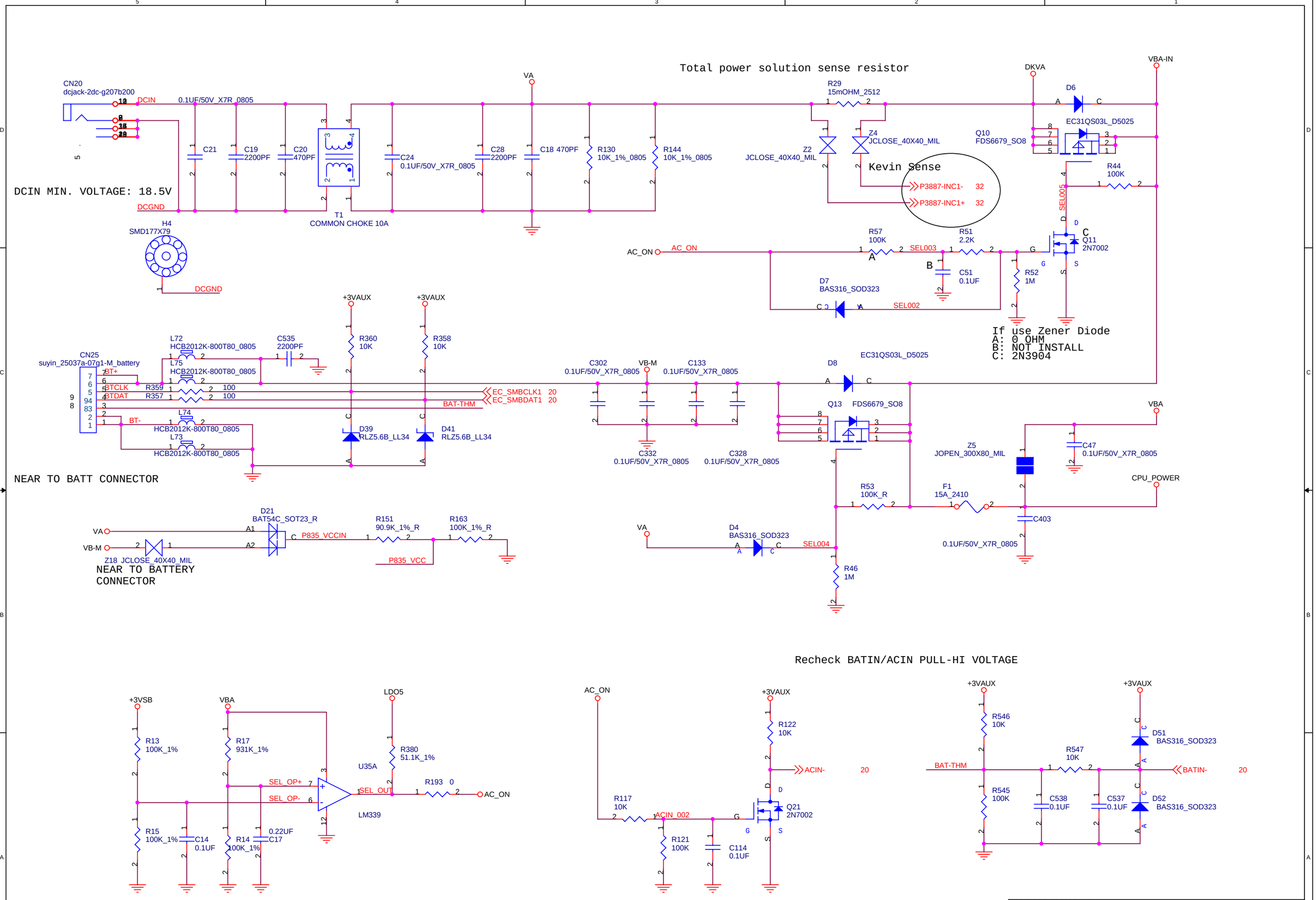

ECS CORP. (G733G M/B)		
Title: ADAPTOR/BATTERY SELECTOR		
Size: Custom	Document Number: G733G-1-3-01	Rev: 4.0
Date: Wednesday, January 12, 2005	Sheet 31 of 39	

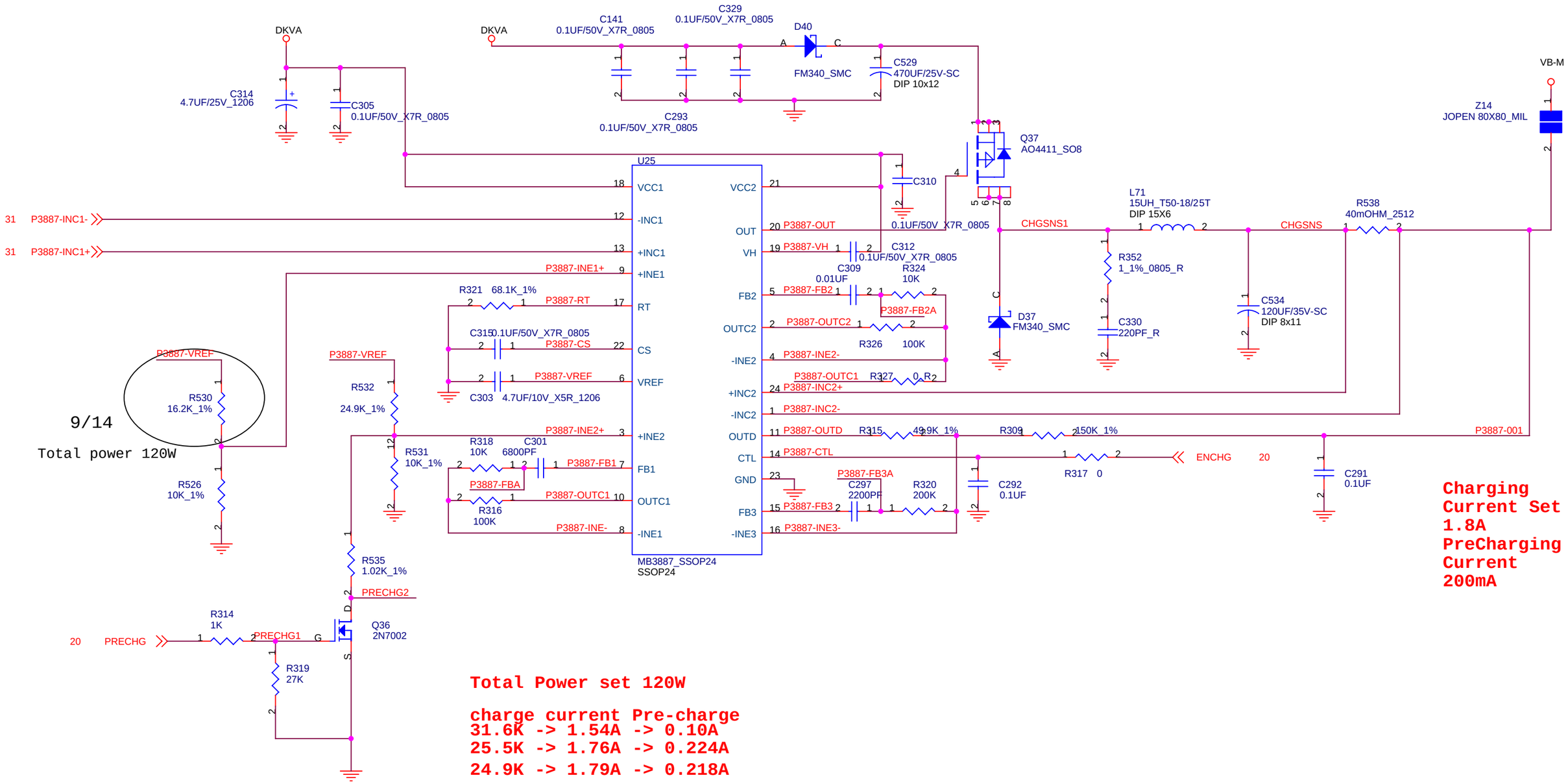

Charging Current Set 1.8A PreCharging Current 200mA

Total Power set 120W

charge current Pre-charge
31.6K -> 1.54A -> 0.10A
25.5K -> 1.76A -> 0.224A
24.9K -> 1.79A -> 0.218A

ECS CORP. (G733G M/B)		
Title MB3887 CHARGER		
Size B	Document Number G733G-1-3-01	Rev 4.0
Date: Wednesday, January 12, 2005	Sheet 32 of 39	

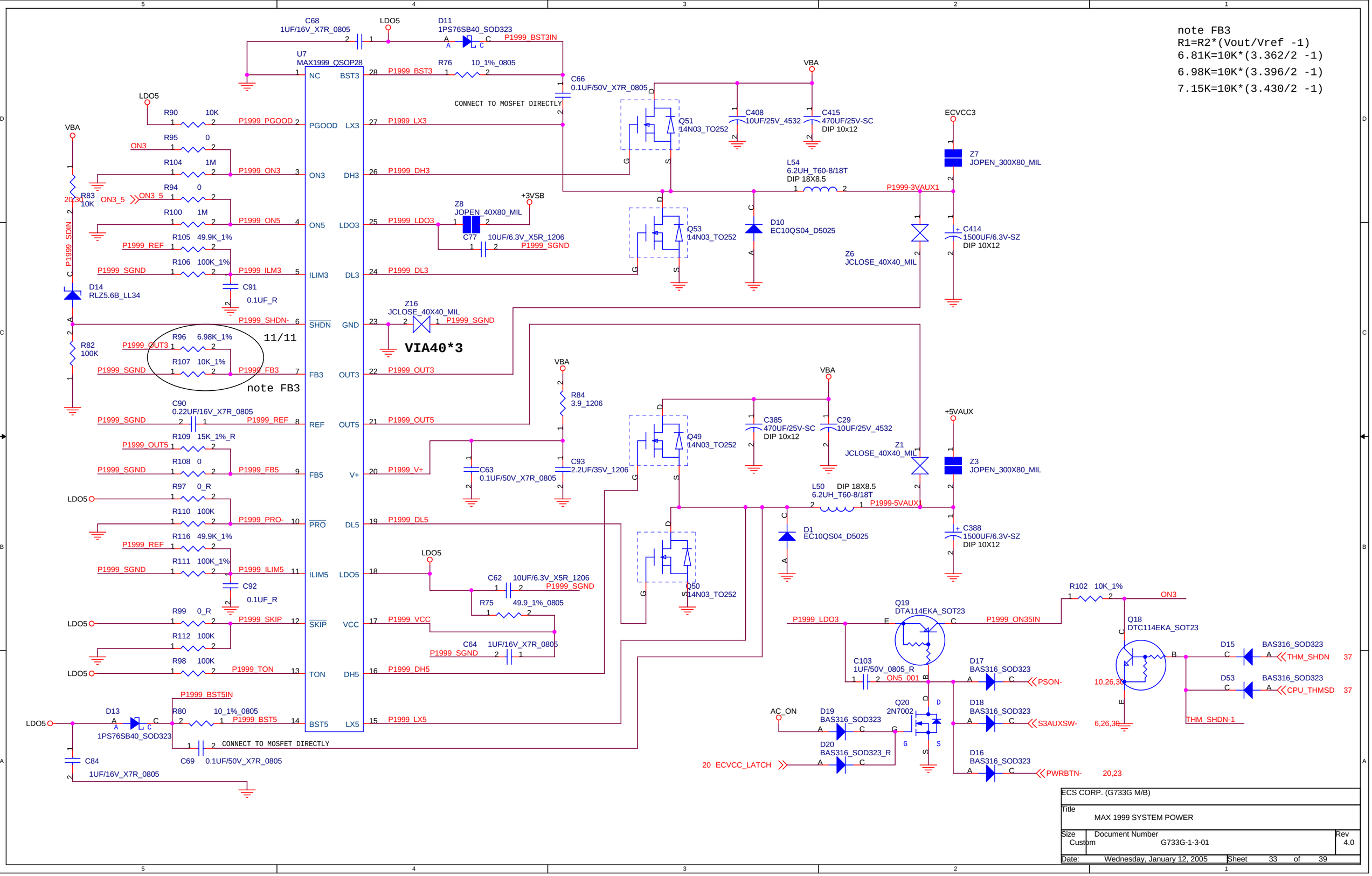
note FB3
R1=R2*(Vout/Vref -1)
6.81K=10K*(3.362/2 -1)
6.98K=10K*(3.396/2 -1)
7.15K=10K*(3.430/2 -1)
U7
MAX1999_QSOP28
NC
BST3
PGOOD
LX3
ON3
DH3
ON5
LDO3
ILIM3
DL3
SHDN
GND
FB3
OUT3
REF
OUT5
FB5
V+
PRO
DL5
ILIM5
LDO5
SKIP
VCC
TON
DH5
BST5
LX5
CONNECT TO MOSFET DIRECTLY
VIA40*3
11/11
note FB3
ECS CORP. (G733G M/B)
Title
MAX 1999 SYSTEM POWER
Size
Custom
Document Number
G733G-1-3-01
Rev
4.0
Date: Wednesday, January 12, 2005
Sheet 33 of 39

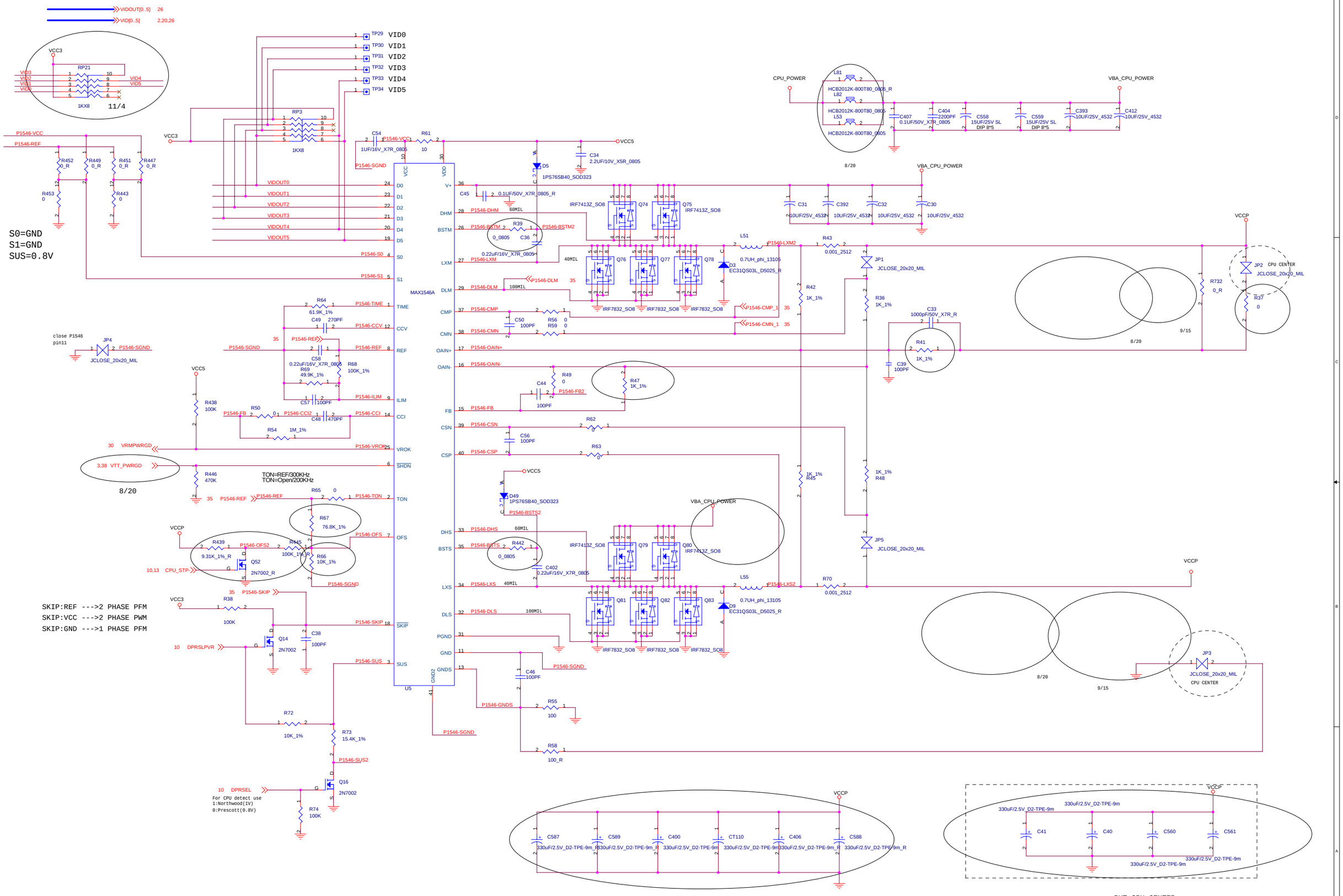

Title	MAX1546 CPU POWER
Size	Document Number G733G-1-3-01
Rev	4.0
Date:	Wednesday, January 12, 2005
Sheet	34 of 39

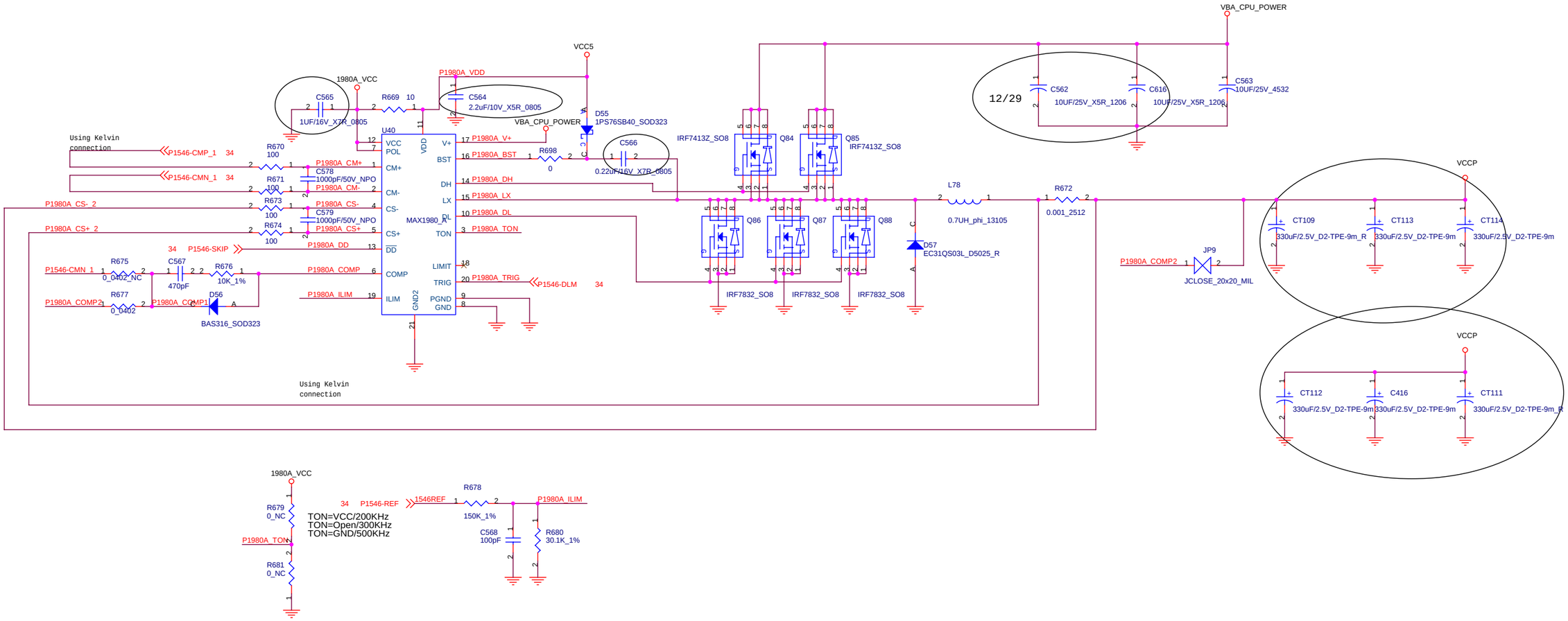

ECS CORP. (G733E M/B)			
Title	MAX1980 CPU POWER		
Size C	Document Number G733G-1-3-01		Rev 4.0
Date: Wednesday, January 12, 2005	Sheet 35 of 39		

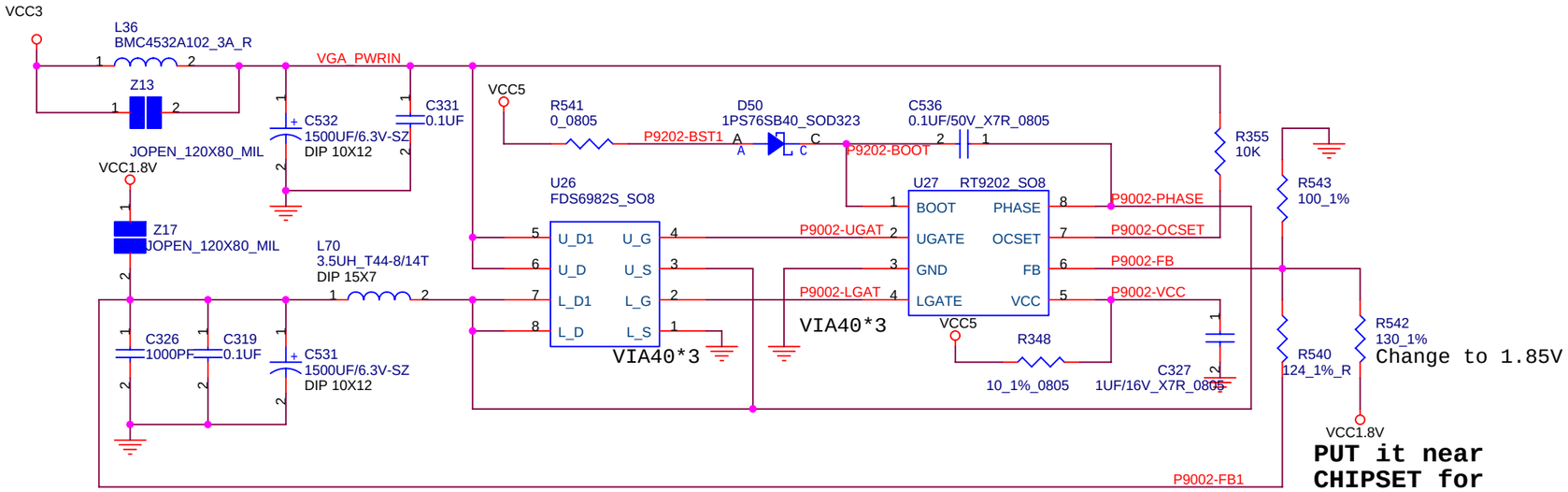

FOR SIS chip 1.8V 3A

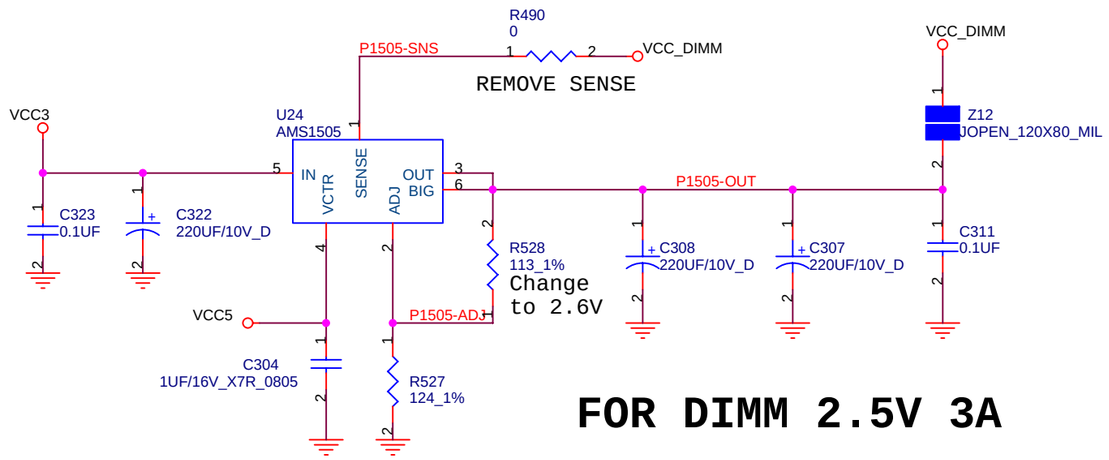

FOR DIMM 2.5V 3A

ECS CORP. (G733G M/B)			
Title: CHIPSET POWER & DDR2.5V			
Size: B	Document Number: G733G-1-3-01		Rev: 4.0
Date: Wednesday, January 12, 2005	Sheet 36 of 39		

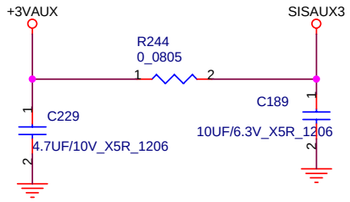

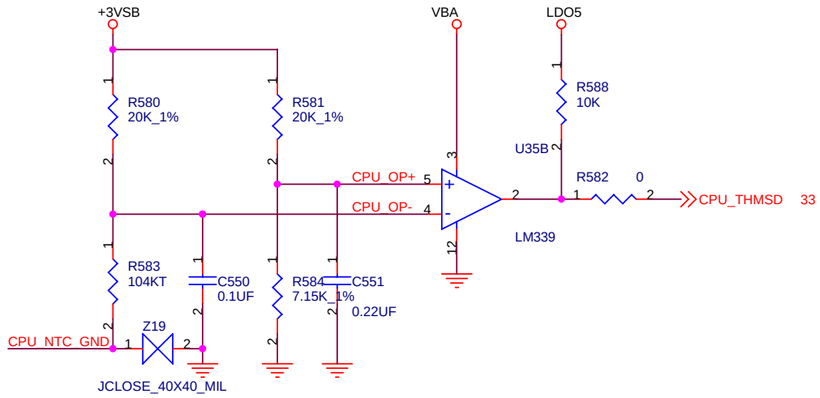

OVER 95 C PROTECT

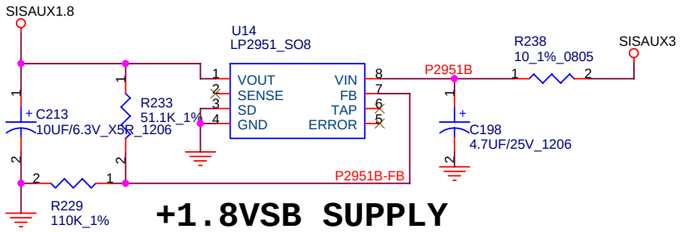

+1.8VSB SUPPLY
30mA FOR SIS
1.8AUX

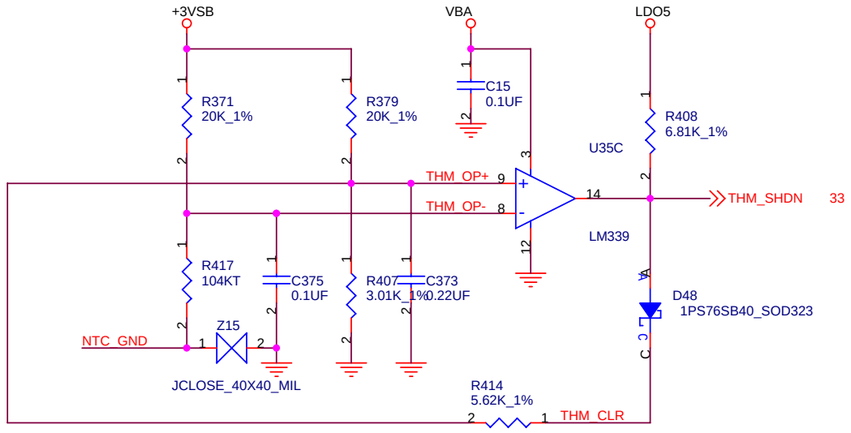

OVER 120 C PROTECT, BUT CLEAR AT < 60 C

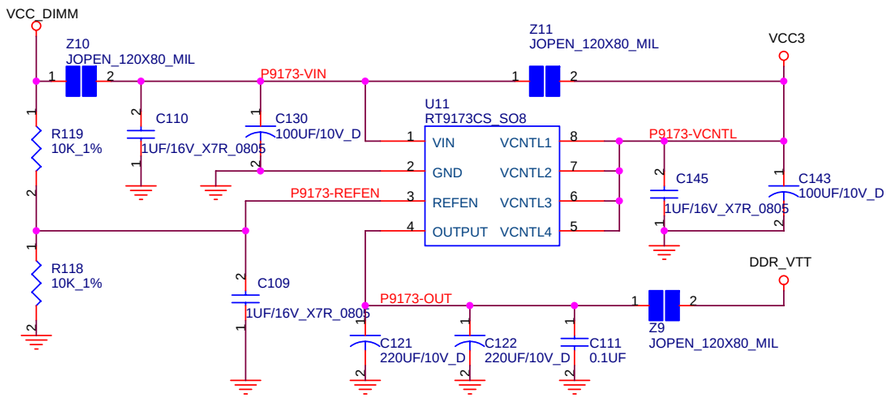

FOR DDR_VTT 1.25V 1.5A

ECS CORP. (G733G M/B)		
Title: LDO & DDRVTT POWER		
Size: Custom	Document Number: G733G-1-3-01	Rev: 4.0
Date: Wednesday, January 12, 2005	Sheet 37 of 39	

FOR LGA775 R5 Version

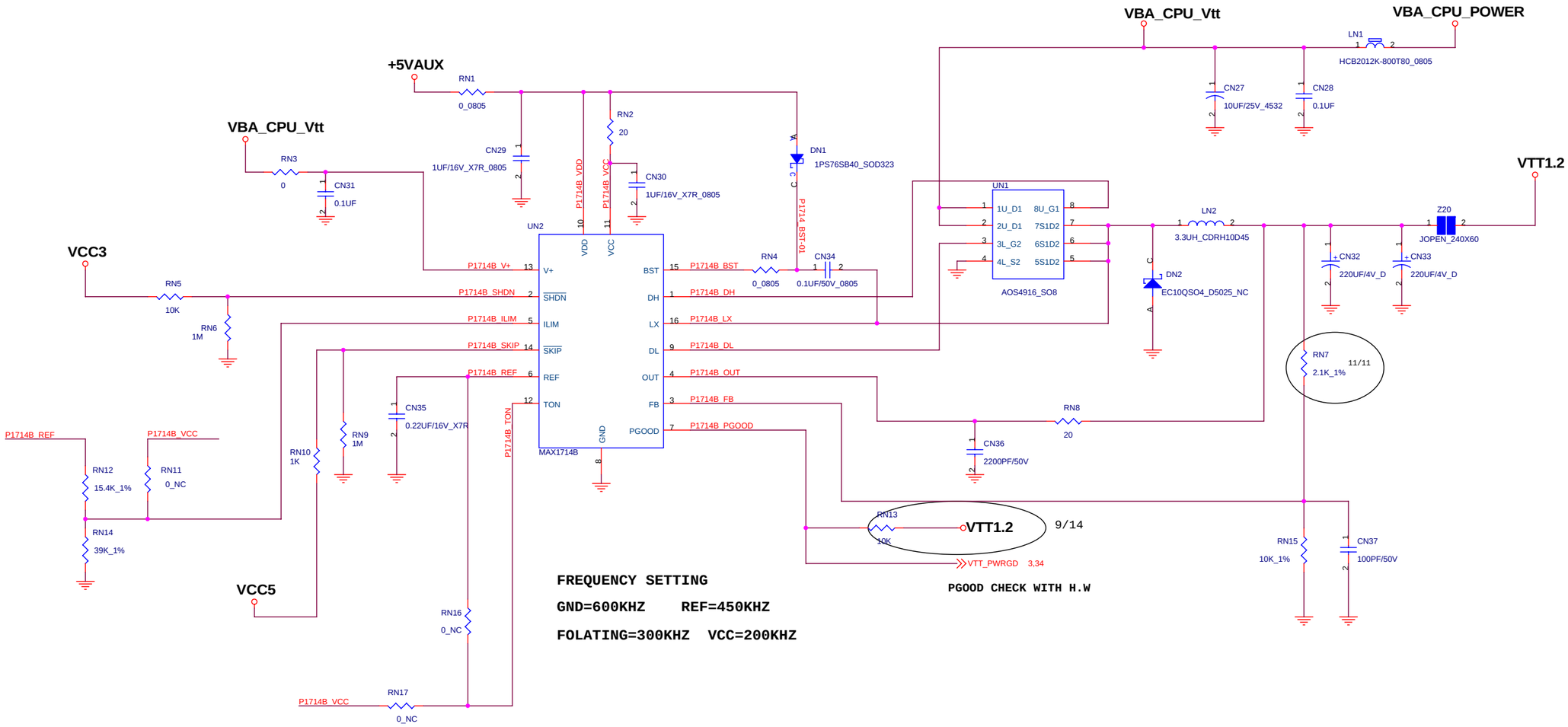

FREQUENCY SETTING

GND=600KHZ REF=450KHZ

FOLATING=300KHZ VCC=200KHZ

PGOOD CHECK WITH H.W

ECS CORP. (G733G M/B)			
Title	CPU_VTT_MAX1714		
Size Custom	Document Number G733G-1-3-01		Rev 4.0
Date: Wednesday, January 12, 2005	Sheet 38 of 39		

HISTORY:

A.0 : INITAL 12/31

POWER: 1.ADD C33,C39,C50,C56 improve waveform.(page.34)
2.DEL R34,R60.(page.34)
H/W: 3.CHANGE RP29 TO 47ohm, SIS recommend value.(page.16)

B.0 : 2/25

POWER: 1.Remove C33 to improve waveform.R528 124->113 RAM VOL.(page.34&35)
2.CHANGE R39,R442 TO SLOVE FSB800 CAN'T BOOT PROBLEM.(page.34)
H/W: 3.CHANGE FOOTPRINT RP21,RP23,RP44,R268,R273,R284,R289.(page.20&34)
4.ADD Prescott C-step processor solution Q60,R558,R295 4.7K->470 ohm.(page.3&10)
5.ADD BOM Q32,Q33,Q35,R511,D25,D33 FOR SYSTEM STATUS.(page.6&26)
6.CHANGE R115,R120 TO 14_1% & 100_1% FOR SIS RECOMMEND.(page.5)
7.DPRSLPVR NEED PULL LOW to improve VCCP waveform,R559.(page.10)
8.ADD VID4(R564,R565_R,R566,R567),FAN FB (Q61,R560,R561,R20,R472).(page.20&34)
9.ADD PWRBTN-,ON3_5 pull high R562,R563, and CHANGE PWRSW- TO PIN1.(page.20)
10.ADD VCCP,PVID5 TO PIN90,168,and LM90's EC_SMBUS CHANGED(del R284,R289 add R268,R273).(page.20)
11.SIS 302LV DEL C429 for panel prob,CHANGE R77 2K->24K SIS recommend.(page.22)
12.LID SOL:REPLACE D46 BY Q62,and MOVE D46.A TO Q1.S THEN ADD R570 to Q1.S pull high.(page.23)
13.uP add VID5(R576,R577_R,R578,R579).(page.20&34)
14.Reserved RP58(CKE),D24(POWRGD FASTER),R574(C-step),R279&C256(panel ID).(page.xx)
15.EC_SMBUS pull high(R571,R572).R509->100Kpull low,R514 0->4.7K pull high for sys-status.(page.20&26)
16.AC'97 EMI:Change C540,C545(680pF->33pF).R550,R552,R294(301FCM->471BK).(page.18)
17.ADD Third system fan controller(Q63,CT67,R586,C553,D54).(page.20)
POWER: 18.R355 4.7K->10K.(page.35)
H/W: 19.SMBUS OF RAM BUFFER CUT OFF(Reserved R555,R556).(page.14)

1.0 : 4/23

POWER: 20.throught rate change to 100us, R64 30.1K -> 61.9K.(page.34)
21.charge current 1.5A -> 1.8A, R532 31.6K -> 24.9K.(page.32)
H/W: 22.ON3_5 thermal protect add Q65,Q66,Q71,R590.(page.30)
23.Add Bus Switch U36,SW2,Q70,R597,R598,CT68,RP72.(page.26)
24.Add panel SMBUS.(page.23)
25.Add SIS recommend circuit of CPURST-.(page.3)

1.A : 5/12

POWER: 26.SET TOTAL POWER TO 90W R530 30.1K->26.7K.(page.32)
H/W: 27.EC RST NEED MORE TIME R300 10K->47K.(page.20)

1.B : 7/06

POWER: 28.Change VCC1.8 to 1.85V, R542 124ohm -> 130ohm.(page.35)
H/W: 29.GTLREF change to 100:169 VCCP.(page.3)

3.0 : 11/12

POWER: 30..(page.??)
H/W: