91251T49.sch-1 - Thu Oct 24 10:04:10 2002

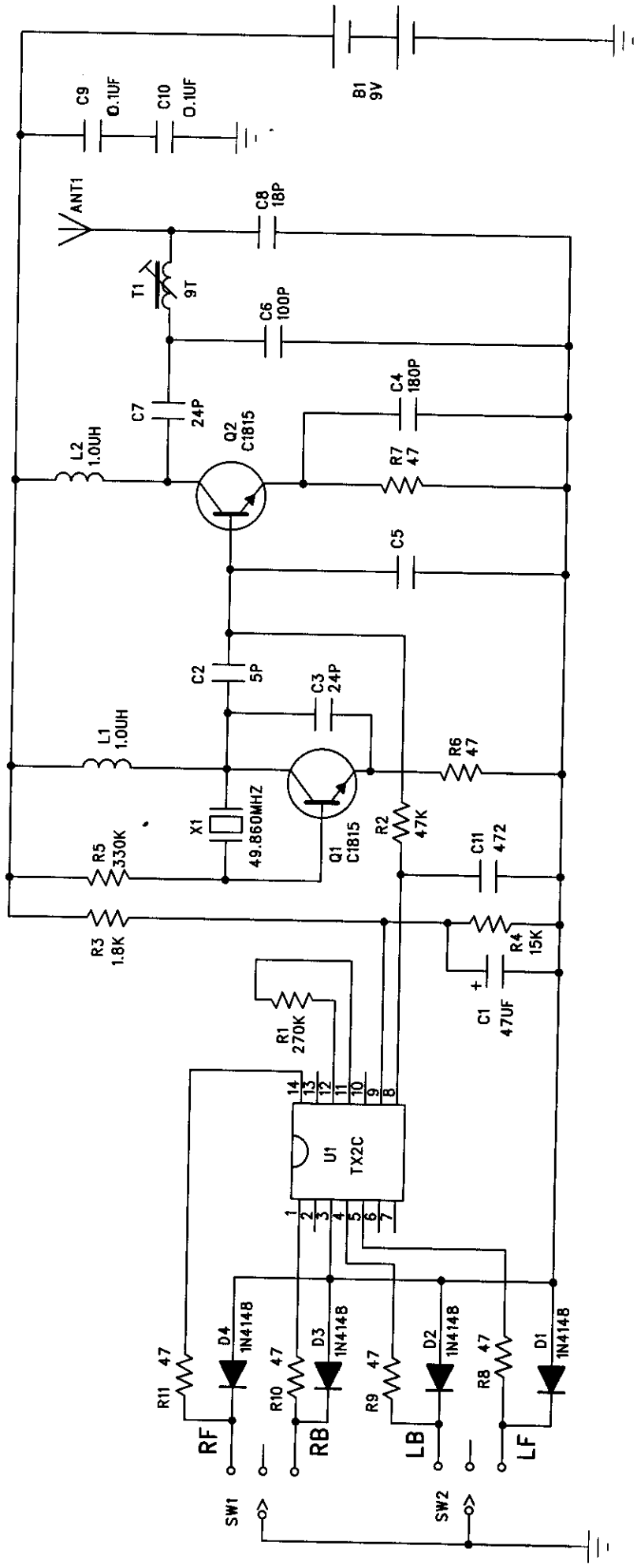

ECHO TOYS LTD.			
TITLE:	SCHEMATIC CIRCUIT	91251	
DRAWING NO:	EE-91251T49-S	TX-49	
DRAWN: ANGEL TONG	DATE: 15 Oct 02	REV: 00	
APPROVED:	DATE:	SHEET: 1 OF 1	