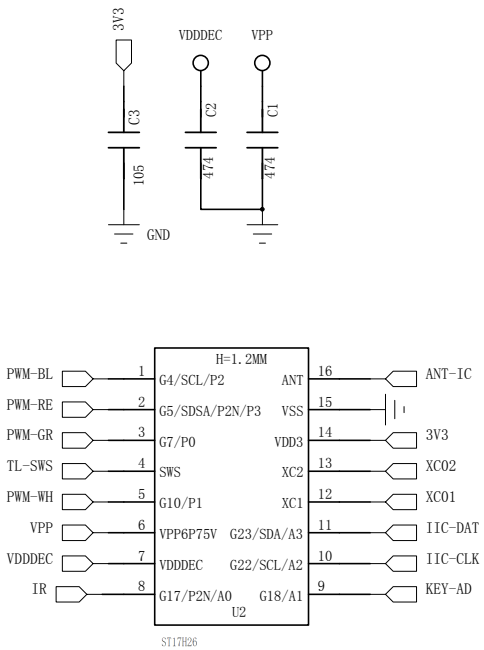
3V3
VDDDEC
VPP
C3
C2
C1
105
474
474
GND
H=1.2MM
PWM-BL
PWM-RE
PWM-GR
TL-SWS
PWM-WH
VPP
VDDDEC
IR
G4/SCL/P2
G5/SDSA/P2N/P3
G7/P0
SWS
G10/P1
VPP6P75V
VDDDEC
G17/P2N/A0
ANT
VSS
VDD3
XC2
XC1
G23/SDA/A3
G22/SCL/A2
G18/A1
U2
ANT-IC
3V3
XC02
XC01
IIC-DAT
IIC-CLK
KEY-AD
ST17H26

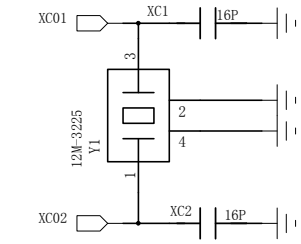
XC01
XC1
16P
12M-3225
Y1
XC02
XC2
16P

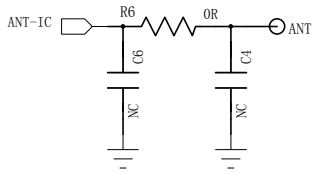
ANT-IC
R6
0R
ANT
C6
C4
NC
NC

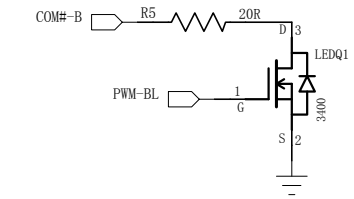
COM#-B
R5
20R
LEDQ1
PWM-BL
3400

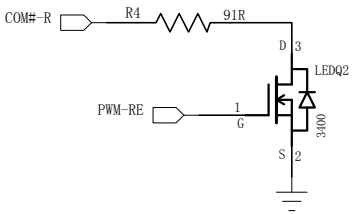
COM#-R
R4
91R
LEDQ2
PWM-RE
3400

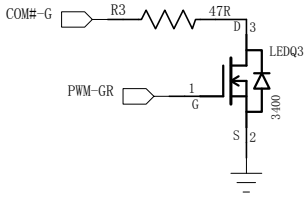
COM#-G
R3
47R
LEDQ3
PWM-GR
3400

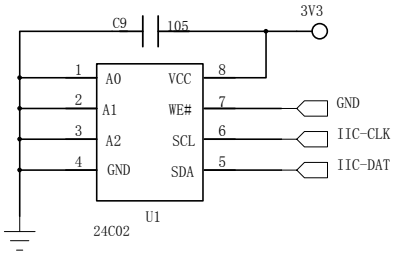
C9
105
3V3
A0
A1
A2
GND
VCC
WE#
SCL
SDA
GND
IIC-CLK
IIC-DAT
U1
24C02

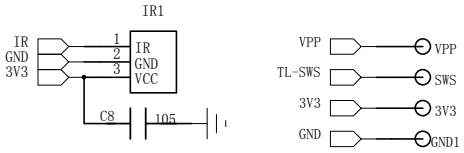
IR1
IR
GND
3V3
IR
GND
VCC
C8
105
VPP
TL-SWS
3V3
GND
VPP
SWS
3V3
GND1

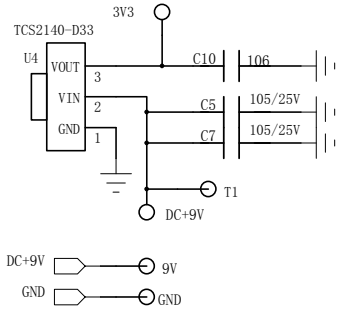
3V3
TCS2140-D33
U4
VOUT
VIN
GND
C10
106
C5
105/25V
C7
105/25V
T1
DC+9V

DC+9V
GND
9V
GND

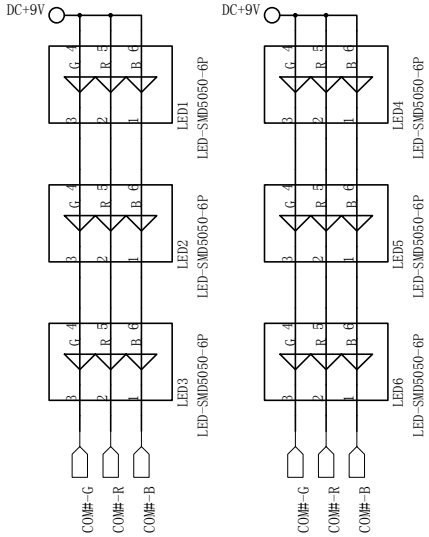
DC+9V
DC+9V
LED1
LED-SMD5050-6P
LED2
LED-SMD5050-6P
LED3
LED-SMD5050-6P
LED4
LED-SMD5050-6P
LED5
LED-SMD5050-6P
LED6
LED-SMD5050-6P
COM#-G
COM#-R
COM#-B
COM#-G
COM#-R
COM#-B

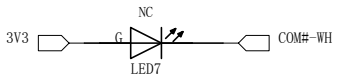
3V3
NC
LED7
COM#-WH

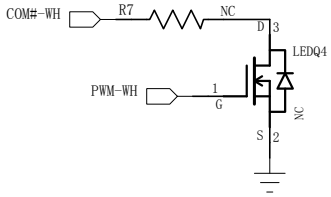
COM#-WH
R7
NC
LEDQ4
PWM-WH
NC