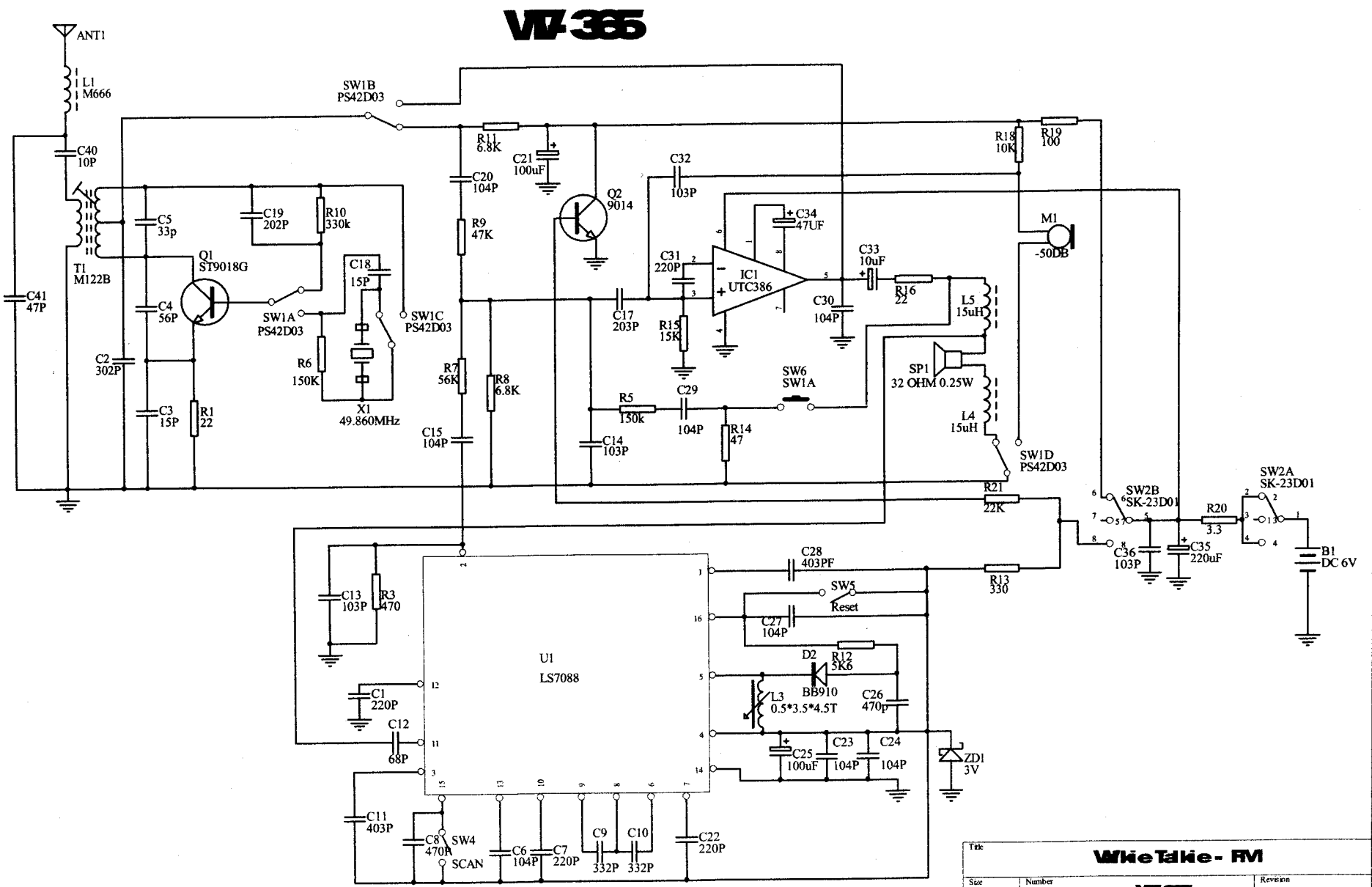
WT-365
ANT1
L1
M666
C40
10P
T1
M122B
C41
47P
C5
33p
C4
56P
C2
302P
C3
15P
R1
22
Q1
ST9018G
C19
202P
R10
330k
SW1A
PS42D03
R6
150K
C18
15P
X1
49.860MHz
SW1C
PS42D03
SW1B
PS42D03
R11
6.8K
C21
100uF
C20
104P
R9
47K
R7
56K
R8
6.8K
C15
104P
Q2
9014
C32
103P
C31
220P
C17
203P
R15
15K
C14
103P
R5
150k
C29
104P
R14
47
IC1
UTC386
C34
47UF
C30
104P
C33
10uF
R16
22
SW6
SW1A
L5
15uH
SP1
32 OHM 0.25W
L4
15uH
SW1D
PS42D03
R18
10K
R19
100
M1
-50DB
R21
22K
SW2B
SK-23D01
SW2A
SK-23D01
R20
3.3
C36
103P
C35
220uF
B1
DC 6V
R13
330
C28
403PF
SW5
Reset
C27
104P
U1
LS7088
D2
BB910
R12
5K6
L3
0.5*3.5*4.5T
C26
470p
C25
100uF
C23
104P
C24
104P
ZD1
3V
C13
103P
R3
470
C1
220P
C12
68P
C11
403P
C8
470P
SW4
SCAN
C6
104P
C7
220P
C9
332P
C10
332P
C22
220P
Title
WkieTalkie - FM
Size
A4
Number
WT-365
Revision
Date:
15-Feb-2006
Sheet of
File: