Telit
GM862-QUAD
GM862-QUAD-PY

Hardware User Guide

Telit Communications S.p.A. 2005

Reproduction forbidden without DAI Telecom written authorization – All Right reserved – Right of modification reserved

Contents

1 OVERVIEW 4

2 HARDWARE COMMANDS 5

2.1 Turning ON the GM862-QUAD 5

2.2 Turning OFF the GM862-QUAD 7
2.2.1.1 Hardware shutdown 7
2.2.1.2 Hardware Unconditional Reset 7

3 POWER SUPPLY 9

3.1 Power Supply Requirements 9

3.2 General Design Rules 9
3.2.1 Electrical design Guidelines 10
3.2.1.1 + 5V input Source Power Supply Design Guidelines 10
3.2.1.2 + 12V input Source Power Supply Design Guidelines 11
3.2.1.3 Battery Source Power Supply Design Guidelines 12
3.2.1.4 Battery Charge control Circuitry Design Guidelines 12
3.2.2 Thermal Design Guidelines 14
3.2.3 Power Supply PCB layout Guidelines 15

4 SERIAL PORT 17

4.1 RS232 level translation 19

4.2 5V UART level translation 21

5 MICROPHONE 23

5.1 Microphone line Characteristic and requirements 23

5.2 General Design Rules 26

5.3 Microphone Biasing 26
5.3.1 Balanced Microphone biasing 27
5.3.2 Unbalanced Microphone biasing 28

5.4 Microphone buffering 29
5.4.1 Buffered Balanced Mic. 29
5.4.2 Buffered Unbalanced (Single Ended) Mic. 31

Reproduction forbidden without DAI Telecom written authorization – All Right reserved – Right of modification reserved

6 SPEAKER 34

6.1 Speaker lines characteristics and requirements 34

6.2 General Design rules 36
6.2.1 Noise Filtering 36

6.3 Handset earphone design 36

6.4 Hands Free earphone (low power) design 38

6.5 Car Kit speakerphone design 38

7 GENERAL PURPOSE I/O 40

7.1 Using a GPIO pin as INPUT 40

7.2 Using a GPIO pin as OUTPUT 40

7.3 Using the Alarm Output GPIO6 41

7.4 Using the Buzzer Output GPIO7 41

8 CAMERA 42

8.1 Agilent Camera 42
8.1.1 Camera interface connectors 42
8.1.2 EVB for camera support 44

8.2 Camera Transchip 45
8.2.1 Camera interface connectors 45
8.2.2 EVB for Agilent and Transchip camera support 47
8.2.3 Block Diagram for supported cameras 48
8.2.4 Schematic Diagrams for supported cameras 49
8.2.5 Example usage script for camera 51

9 DOCUMENT CHANGE LOG 52

10 ANNEX A - EVK SCHEMATICS 53

11 ANNEX B - CAMERA EVB SCHEMATICS 65

Reproduction forbidden without DAI Telecom written authorization – All Right reserved – Right of modification reserved

1 Overview

The aim of this document is the description of some hardware solutions useful for developing a product with the Telit GM862-QUAD/-QUAD-PY modules.

In this document all the basic functions of a mobile phone will be taken into account; for each one of them a proper hardware solution will be suggested and eventually the wrong solutions and common errors to be avoided will be evidenced. Obviously this document can not embrace the whole hardware solutions and products that may be designed. The wrong solutions to be avoided shall be considered as mandatory, while the suggested hardware configurations shall not be considered mandatory, instead the information given shall be used as a guide and a starting point for properly developing your product with the Telit GM862-QUAD/-QUAD-PY modules. For further hardware details that may not be explained in this document refer to the GM862-QUAD/-QUAD-PY Product Description document where all the hardware information is reported.

NOTE: In this document all the hardware solution are referenced to the GM862-QUAD.

As a general rule, since all the product line GM862-QUAD, GM862-QUAD-PY is pin to pin hardware compatible, all these solutions apply also to the GM862-QUAD-PY.

NOTE

The information presented in this document is believed to be accurate and reliable. However, no responsibility is assumed by DAI Telecom for its use, nor any infringement of patents or other rights of third parties which may result from its use. No license is granted by implication or otherwise under any patent rights of DAI Telecom other than for circuitry embodied in Telit products. This document is subject to change without notice.

2 Hardware Commands

2.1 Turning ON the GM862-QUAD

To turn on the GM862-QUAD the pin ON# must be tied low for at least 1 second and then released. The maximum current that can be drained from the ON# pin is 0,1 mA.
A simple circuit to do it is:

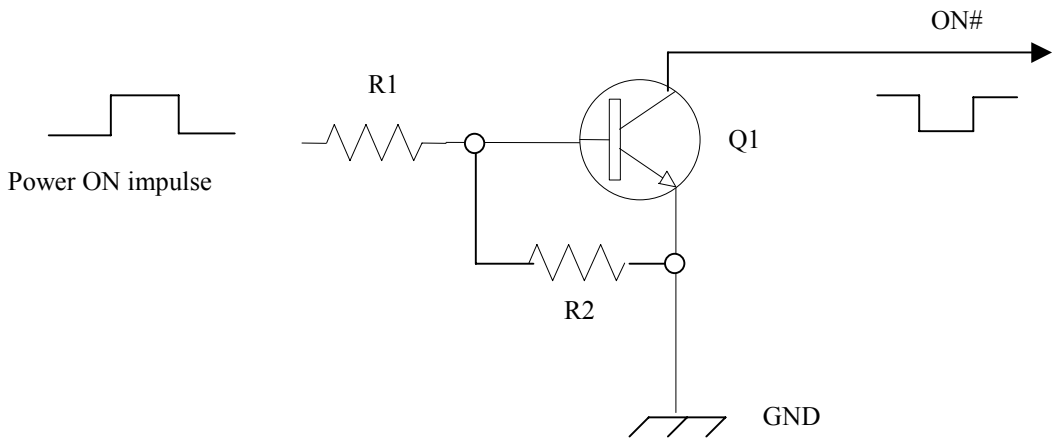

NOTE: don't use any pull up resistor on the ON# line, it is internally pulled up. Using pull up resistor may bring to latch up problems on the GM862-QUAD power regulator and improper power on/off of the module. The line ON# must be connected only in open collector configuration.

NOTE: In this document all the lines that are inverted, hence have active low signals are labeled with a name that ends with a "#" or with a bar over the name.

TIP: To check if power has raised it is possible to monitor the START line, when this line goes high the module is powered on, but before it remains on the device needs other 900 ms for software startup. Hence check the PWRCTL line and 900 ms after its transition to high it is possible to release the ON# pin.

Reproduction forbidden without DAI Telecom written authorization – All Right reserved – Right of modification reserved

For example:

1- Let's assume you need to drive the ON# pin with a totem pole output of a +3/5 V microcontroller (uP_OUT1):

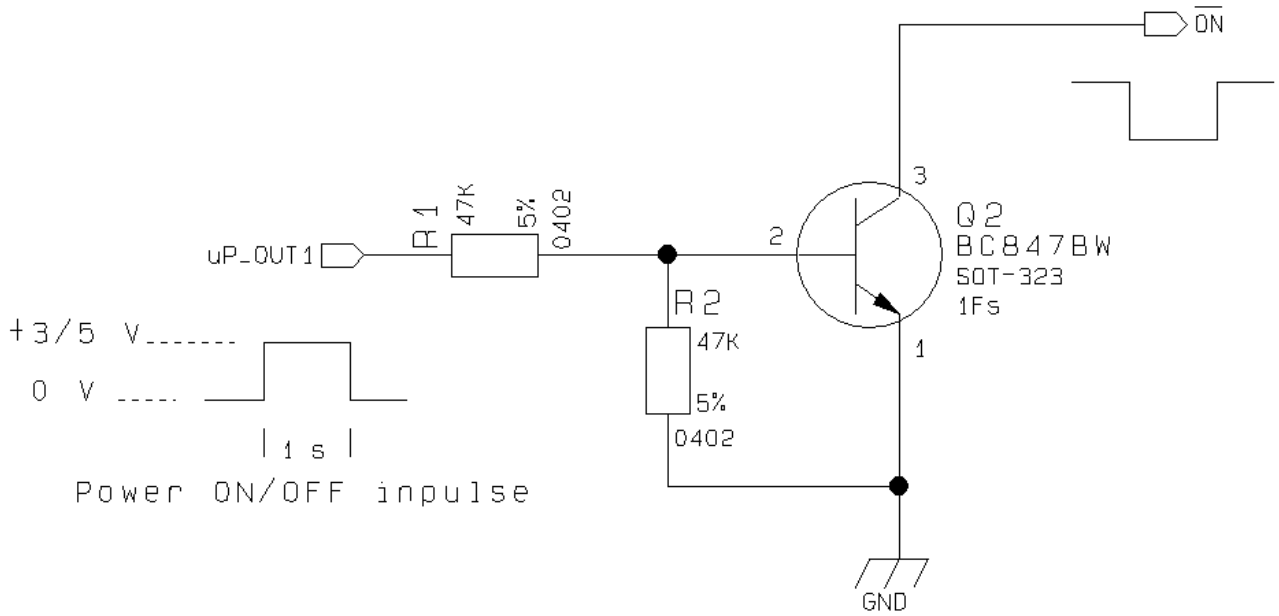

2- Let's assume you need to drive the ON# pin directly with an ON/OFF button:

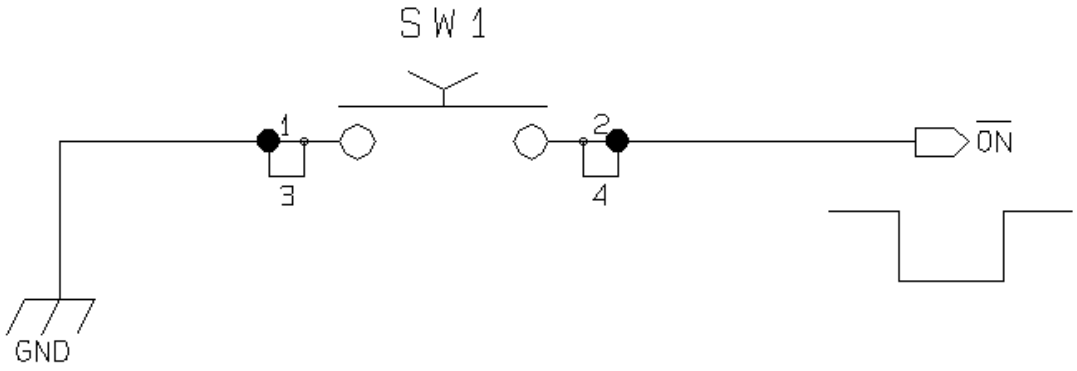

Reproduction forbidden without DAI Telecom written authorization – All Right reserved – Right of modification reserved

2.2 Turning OFF the GM862-QUAD

The turning off of the device can be done in three ways:

- by software command (see GM862-QUAD Software User Guide)
- by hardware shutdown
- by hardware unconditional shutdown

When the device is shut down by software command or by hardware shutdown, it issues to the network a detach request that informs the network that the device will not be reachable any more. The hardware unconditional shutdown does not issue this request and shuts down immediately the device.

The hardware unconditional shutdown must not be used during normal operation of the device since it does not detach the device from the network. It shall be kept as an emergency exit procedure to be done in the rare case that the device gets stucked waiting for some network or SIM responses.

If device does not respond to a command in the timeout window, retry issuing the command and if still no response is received a hardware unconditional shutdown shall be issued and then a restart.

2.2.1.1 Hardware shutdown

To turn OFF the GM862-QUAD the pin ON# must be tied low for at least 1 second and then released.

The same circuitry and timing for the power on shall be used.

The device shuts down after the release of the ON# pin.

TIP: To check if the device has powered off, the hardware line PWRCTL should be monitored. When PWRCTL goes low, the device has powered off.

2.2.1.2 Hardware Unconditional Reset

To unconditionally turn OFF the GM862-QUAD the pin RESET# must be tied low for at least 200 milliseconds and then released.

The maximum current that can be drained from the ON# pin is 0,15 mA.

A simple circuit to do it is:

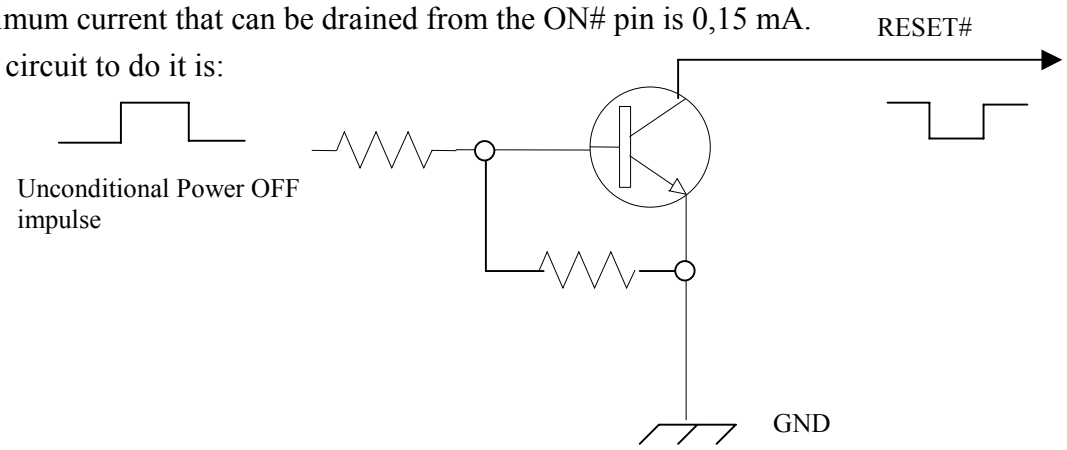

Reproduction forbidden without DAI Telecom written authorization – All Right reserved – Right of modification reserved

NOTE: don't use any pull up resistor on the RESET# line nor any totem pole digital output. Using pull up resistor may bring to latch up problems on the GM862-QUAD power regulator and improper functioning of the module. The line RESET# must be connected only in open collector configuration.

TIP: The unconditional hardware reset should be always implemented on the boards and software should use it as an emergency exit procedure.

For example:

1- Let's assume you need to drive the RESET# pin with a totem pole output of a +3/5 V microcontroller (uP_OUT2):

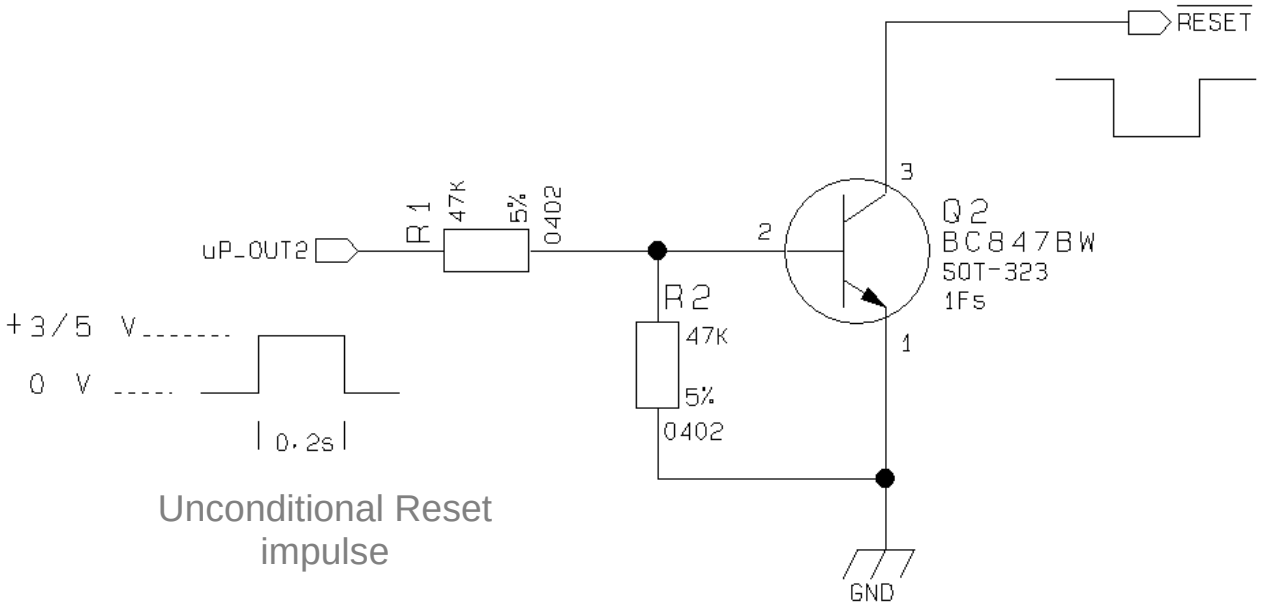

Unconditional Reset impulse

3 Power Supply

The power supply circuitry and board layout are the most important part in the full product design and they strongly reflect on the product overall performances, hence read carefully the requirements and the guidelines that will follow for a proper design.

3.1 Power Supply Requirements

The GM862-QUAD power requirements are:

- *Nominal Supply Voltage:* *3.8 V*
- *Max Supply Voltage:* *4.2 V*
- *Supply voltage range:* *3.4 V - 4.2 V*
- *Max Peak current consumption (impulsive):* *1.9 A*
- *Max Average current consumption during transmission (rms):* *350 mA*
- *Average current during Power Saving:* *≈ 4 mA*
- *Average current during idle (Power Saving disabled)* *≈ 17 mA*

The GSM system is made in a way that the RF transmission is not continuous, else it is packed into bursts at a base frequency of about 216 Hz, the relative current peaks can be as high as about 2A. Therefore the power supply has to be designed in order to withstand with these current peaks without big voltage drops; this means that both the electrical design and the board layout must be designed for this current flow.

If the layout of the PCB is not well designed a strong noise floor is generated on the ground and the supply; this will reflect on all the audio paths producing an audible annoying noise at 216 Hz; if the voltage drop during the peak current absorption is too much, then the device may even shutdown as a consequence of the supply voltage drop.

TIP: The electrical design for the Power supply should be made ensuring it will be capable of a peak current output of at least 2 A.

3.2 General Design Rules

The principal guidelines for the Power Supply Design embrace three different design steps:

- the electrical design
- the thermal design.
- the PCB layout.

Reproduction forbidden without DAI Telecom written authorization – All Right reserved – Right of modification reserved

3.2.1 Electrical design Guidelines

The electrical design of the power supply depends strongly from the power source where this power is drained. We will distinguish them into three categories:

- +5V input (typically PC internal regulator output)
- +12V input (typically automotive)
- Battery

3.2.1.1 + 5V input Source Power Supply Design Guidelines

- The desired output for the power supply is 3.8V, hence there's not a big difference between the input source and the desired output and a linear regulator can be used. A switching power supply will not be suited because of the low drop out requirements.
- When using a linear regulator, a proper heat sink shall be provided in order to dissipate the power generated.
- A Bypass low ESR capacitor of adequate capacity must be provided in order to cut the current absorption peaks close to the GM862-QUAD, a 100µF tantalum capacitor is usually suited.
- Make sure the low ESR capacitor on the power supply output (usually a tantalum one) is rated at least 10V.
- A protection diode should be inserted close to the power input, in order to save the GM862-QUAD from power polarity inversion.

An example of linear regulator with 5V input is:

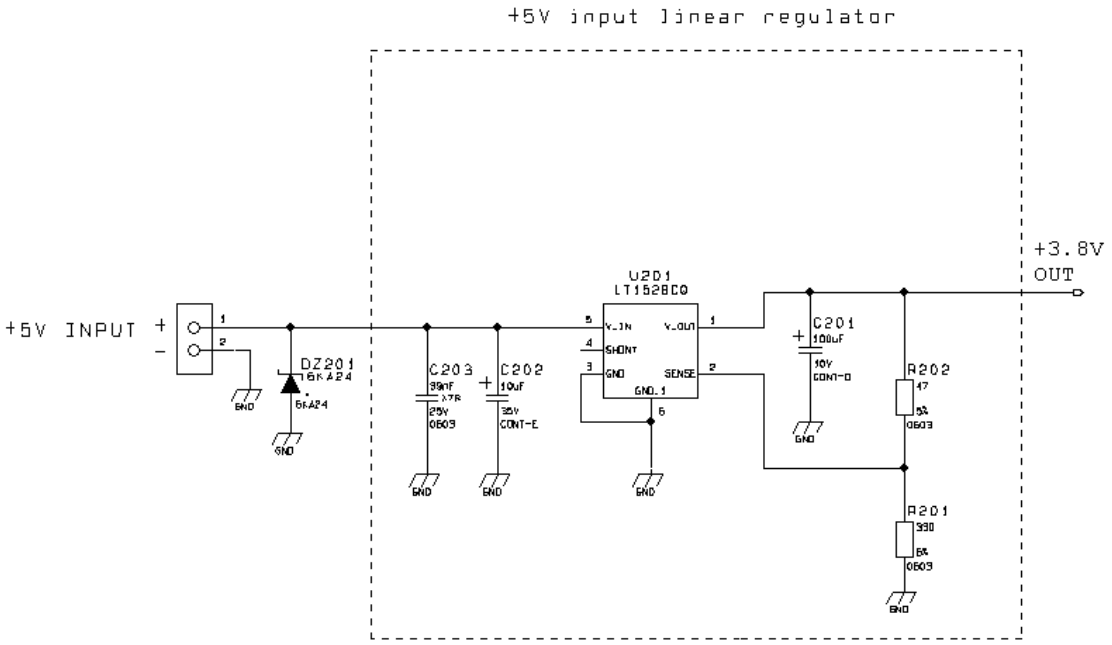

3.2.1.2 + 12V input Source Power Supply Design Guidelines

- The desired output for the power supply is 3.8V, hence due to the big difference between the input source and the desired output, a linear regulator is not suited and shall not be used. A switching power supply will be preferable because of its better efficiency especially with the 2A peak current load represented by the GM862-QUAD.
- When using a switching regulator, a 500Khz switching frequency regulator is preferable because of its smaller inductor size and its faster transient response. This allows the regulator to respond quickly to the current peaks absorption.
- For car PB battery the input voltage can rise up to 15,8V and this should be kept in mind when choosing components: all components in the power supply must withstand this voltage.
- A Bypass low ESR capacitor of adequate capacity must be provided in order to cut the current absorption peaks, a 100µF tantalum capacitor is usually suited.
- Make sure the low ESR capacitor on the power supply output (usually a tantalum one) is rated at least 10V.
- For Car applications a spike protection diode should be inserted close to the power input, in order to clean the supply from spikes.
- A protection diode should be inserted close to the power input, in order to save the GM862-QUAD from power polarity inversion. This can be the same diode as for spike protection.

An example of switching regulator with 12V input is:

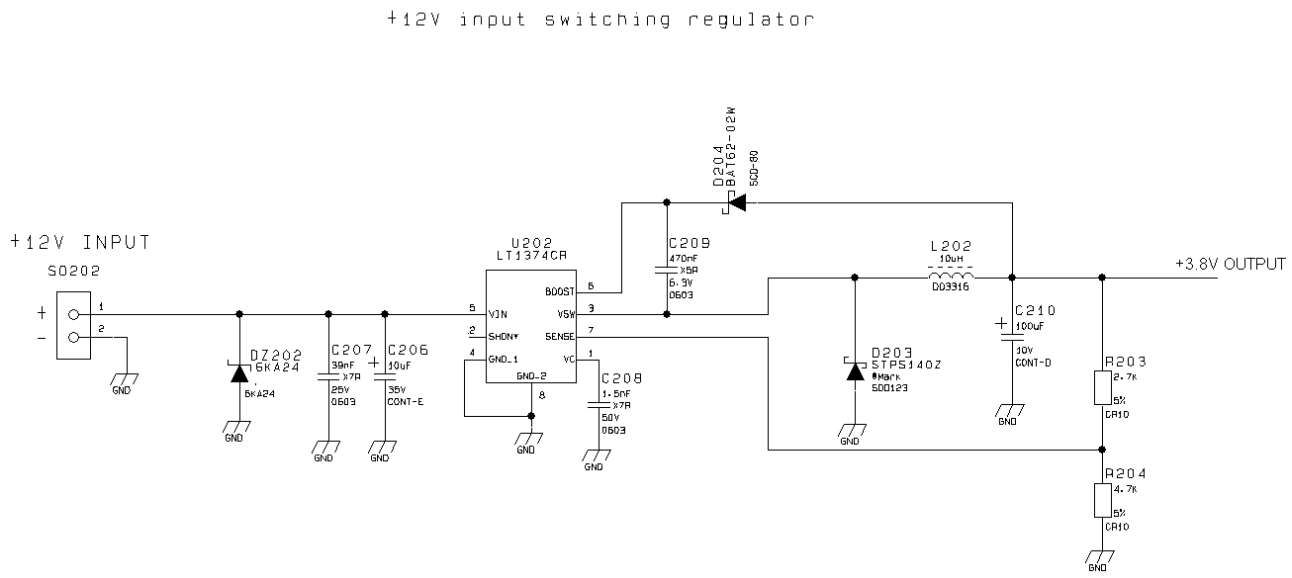

3.2.1.3 Battery Source Power Supply Design Guidelines

- The desired nominal output for the power supply is 3.8V and the maximum voltage allowed is 4.2V, hence a single 3.7V Li-Ion cell battery type is suited for supplying the power to the Telit GM862-QUAD module.

  The three cells Ni/Cd or Ni/MH 3,6 V Nom. battery types or 4V PB types ***MUST NOT BE USED*** since their maximum voltage can rise over the absolute maximum voltage for the GM862-QUAD and damage it.

NOTE: DON'T USE any Ni-Cd, Ni-MH, and Pb battery types. Their use can lead to overvoltage on the GM862-QUAD and damage it. USE ONLY Rechargeable Li-Ion battery types.

- A Bypass low ESR capacitor of adequate capacity must be provided in order to cut the current absorption peaks, a 100µF tantalum capacitor is usually suited.
- Make sure the low ESR capacitor (usually a tantalum one) is rated at least 10V.
- A protection diode should be inserted close to the power input, in order to save the GM862-QUAD from power polarity inversion. Otherwise the battery connector should be done in a way to avoid polarity inversions when connecting the battery.
- The battery capacity must be at least 500mAh in order to withstand the current peaks of 2A; the suggested capacity is from 500mAh to 1000mAh.

3.2.1.4 Battery Charge control Circuitry Design Guidelines

The charging process for Li-Ion Batteries can be divided into 4 phases:

- Qualification and trickle charging
- Fast charge 1 - constant current
- Final charge - constant voltage or pulsed charging
- Maintenance charge

The qualification process consists in a battery voltage measure, indicating roughly its charge status. If the battery is deeply discharged, that means its voltage is lower than the trickle charging threshold, then the charge must start slowly possibly with a current limited pre-charging process where the current is kept very low with respect to the fast charge value: the trickle charging.

During the trickle charging the voltage across the battery terminals rises; when it reaches the fast charge threshold level the charging process goes into fast charge phase.

During the fast charge phase the process proceeds with a current limited charging; this current limit depends on the required time for the complete charge and from the battery pack capacity. During this phase the voltage across the battery terminals still raises but at a lower rate.

Reproduction forbidden without DAI Telecom written authorization – All Right reserved – Right of modification reserved

Once the battery voltage reaches its maximum voltage then the process goes into its third state: Final charging. The voltage measure to change the process status into final charge is very important. It must be ensured that the maximum battery voltage is never exceeded, otherwise the battery may be damaged and even explode. Moreover for the constant voltage final chargers, the constant voltage phase (final charge) must not start before the battery voltage has reached its maximum value, otherwise the battery capacity will be highly reduced.

The final charge can be of two different types: constant voltage or pulsed.

The constant voltage charge proceeds with a fixed voltage regulator (very accurately set to the maximum battery voltage) and hence the current will decrease while the battery is becoming charged. When the charging current falls below a certain fraction of the fast charge current value, then the battery is considered fully charged, the final charge stops and eventually starts the maintenance.

The pulsed charge process has no voltage regulation, instead the charge continues with pulses. Usually the pulse charge works in the following manner: the charge is stopped for some time, let's say few hundreds of ms, then the battery voltage will be measured and when it drops below its maximum value a fixed time length charging pulse is issued. As the battery approaches its full charge the off time will become longer, hence the duty-cycle of the pulses will decrease. The battery is considered fully charged when the pulse duty-cycle is less than a threshold value, typically 10%, the pulse charge stops and eventually the maintenance starts.

The last phase is not properly a charging phase, since the battery at this point is fully charged and the process may stop after the final charge. The maintenance charge provides an additional charging process to compensate for the charge leak typical of a Li-Ion battery. It is done by issuing pulses with a fixed time length, again few hundreds of ms, and a duty-cycle around 5% or less.

This last phase is not implemented in the GM862-QUAD internal charging algorithm, so that the battery once charged is left discharging down to a certain threshold so that it is cycled from full charge to slight discharge even if the battery charger is always inserted. This guarantees that anyway the remaining charge in the battery is a good percentage and that the battery is not damaged by keeping it always fully charged (Li-Ion rechargeable battery usually deteriorate when kept fully charged).

Last but not least, in some applications it is highly desired that the charging process restarts when the battery is discharged and its voltage drops below a certain threshold, GM862-QUAD internal charger does it.

As you can see, the charging process is not a trivial task to be done; moreover all these operations should start only if battery temperature is inside a charging range, usually 5°C - 45°C.

The GM862-QUAD measures the temperature of its internal component, in order to satisfy this last requirement, it's not exactly the same as the battery temperature but in common application the two temperature should not differ too much and the charging temperature range should be guaranteed.

Reproduction forbidden without DAI Telecom written authorization – All Right reserved – Right of modification reserved

An example of battery charger can be:

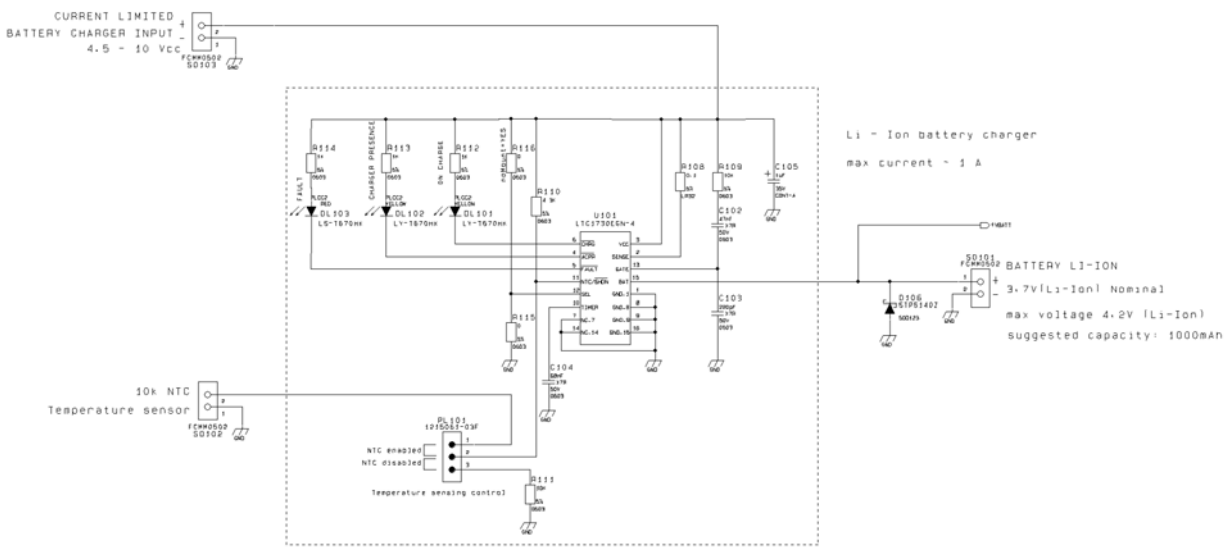

NOTE: In this particular application the battery charger input current must be limited to less than 1A. This can be done by using a current limited wall adapter as the power source.

For your convenience in the EVK there's also a current unlimited input, where the input source is not limited in current and the drawn current is limited to about 0,5A by a MOSFET in the EVK.

3.2.2Thermal Design Guidelines

The thermal design for the power supply heat sink should be done with the following specifications:

- *Average current consumption during transmission @PWR level max (rms): 350mA*
- *Average current consumption during transmission @ PWR level min (rms): 100mA*
- *Average current during Power Saving: 4mA*
- *Average current during idle (Power Saving disabled) 17mA*

NOTE: The average consumption during transmissions depends on the power level at which the device is requested to transmit by the network. The average current consumption hence varies significantly.

TIP: The thermal design for the Power supply should be made keeping a average consumption at the max transmitting level during calls of 350mA rms.

Considering the very low current during idle, especially if Power Saving function is enabled, it is possible to consider from the thermal point of view that the device absorbs current significantly only during calls.

Reproduction forbidden without DAI Telecom written authorization – All Right reserved – Right of modification reserved

If we assume that the device stays into transmission for short periods of time (let's say few minutes) and then remains for a quite long time in idle (let's say one hour), then the power supply has always the time to cool down between the calls and the heat sink could be smaller than the calculated one for 350mA maximum RMS current, or even could be the simple chip package (no heat sink).

Moreover in the average network conditions the device is requested to transmit at a lower power level than the maximum and hence the current consumption will be less than the 350mA, being usually around 150mA.

For these reasons the thermal design is rarely a concern and the simple ground plane where the power supply chip is placed can be enough to ensure a good thermal condition and avoid overheating.

3.2.3 Power Supply PCB layout Guidelines

As seen on the electrical design guidelines the power supply shall have a low ESR capacitor on the output to cut the current peaks and a protection diode on the input to protect the supply from spikes and polarity inversion. The placement of these components is crucial for the correct working of the circuitry. A misplaced component can be useless or can even decrease the power supply performances.

- The Bypass low ESR capacitor must be placed close to the Telit GM862-QUAD power input pins or in the case the power supply is a switching type it can be placed close to the inductor to cut the ripple provided the PCB trace from the capacitor to the GM862-QUAD is wide enough to ensure a dropless connection even during the 2A current peaks.
- The protection diode must be placed close to the input connector where the power source is drained.
- The PCB traces from the input connector to the power regulator IC must be wide enough to ensure no voltage drops occur when the 2A current peaks are absorbed. Note that this is not made in order to save power loss but especially to avoid the voltage drops on the power line at the current peaks frequency of 216 Hz that will reflect on all the components connected to that supply, introducing the noise floor at the burst base frequency. For this reason while a voltage drop of 300-400 mV may be acceptable from the power loss point of view, the same voltage drop may not be acceptable from the noise point of view. If your application doesn't have audio interface but only uses the data feature of the Telit GM862-QUAD, then this noise is not so disturbing and power supply layout design can be more forgiving.
- The PCB traces to the GM862-QUAD and the Bypass capacitor must be wide enough to ensure no voltage drops occur when the 2A current peaks are absorbed. This is for the same reason as previous point. Try to keep this trace as short as possible.
- The PCB traces connecting the Switching output to the inductor and the switching diode must be kept as short as possible by placing the inductor and the diode very close to the power switching IC (only for switching power supply). This is done in order to reduce the radiated field (noise) at the switching frequency (100-500 kHz usually).
- The use of a good common ground plane is suggested.

Reproduction forbidden without DAI Telecom written authorization – All Right reserved – Right of modification reserved

- The placement of the power supply on the board should be done in such a way to guarantee that the high current return paths in the ground plane are not overlapped to any noise sensitive circuitry as the microphone amplifier/buffer or earphone amplifier.
- The power supply input cables should be kept separate from noise sensitive lines such as microphone/earphone cables.

Reproduction forbidden without DAI Telecom written authorization – All Right reserved – Right of modification reserved

4 Serial Port

The serial port on the Telit GM862-QUAD is the core of the interface between the module and OEM hardware. Several configurations can be designed for the serial port on the OEM hardware, but the most common are:

- RS232 PC com port
- microcontroller UART @ 2.8V - 3V (Universal Asynchronous Receive Transmit)
- microcontroller UART@ 5V or other voltages different from 2.8V

Depending from the type of serial port on the OEM hardware a level translator circuit may be needed to make the system work. The only configuration that doesn't need a level translation is the 2.8V UART.

The serial port on the GM862-QUAD is a +2.8V UART with all the 7 RS232 signals. It differs from the PC-RS232 in the signal polarity (RS232 is reversed) and levels. The levels for the GM862-QUAD UART are the CMOS levels:

Absolute Maximum Ratings -Not Functional

Parameter	Min	Max
Input level on any digital pin when on	-0.3V	+3.75V
Input voltage on analog pins when on	-0.3V	+3.0 V

Operating Range - Interface levels (2.8V CMOS)

Level	Min	Max
Input high level V_{IH}	2.1V	3.3V
Input low level V_{IL}	0V	0.5V
Output high level V_{OH}	2.2V	3.0V
Output low level V_{OL}	0V	0.35V

Reproduction forbidden without DAI Telecom written authorization – All Right reserved – Right of modification reserved

The signals of the GM862-QUAD serial port are:

RS232 Pin Number	Signal	GM862-QUAD Pin Number	Name	Usage
1	DCD - dcd_uart	36	Data Carrier Detect	Output from the GM862-QUAD that indicates the carrier presence
2	RXD - tx_uart	37	Transmit line *see Note	Output transmit line of GM862-QUAD UART
3	TXD - rx_uart	20	Receive line *see Note	Input receive of the GM862-QUAD UART
4	DTR - dtr_uart	43	Data Terminal Ready	Input to the GM862-QUAD that controls the DTE READY condition
5	GND	2-4-6-8	Ground	ground
6	DSR - dsr_uart	33	Data Set Ready	Output from the GM862-QUAD that indicates the module is ready
7	RTS - rts_uart	45	Request to Send	Input to the GM862-QUAD that controls the Hardware flow control
8	CTS - cts_uart	29	Clear to Send	Output from the GM862-QUAD that controls the Hardware flow control
9	RI - ri_uart	30	Ring Indicator	Output from the GM862-QUAD that indicates the incoming call condition

NOTE: According to V.24, RX/TX signal names are referred to the application side, therefore on the GM862-QUAD side these signal are on the opposite direction: TXD on the application side will be connected to the receive line (here named TXD/ rx_uart) of the GM862-QUAD serial port and viceversa for RX.

TIP: For a minimum implementation, only the TXD and RXD lines can be connected, the other lines can be left open provided a software flow control is implemented.

The signals in the UART connector on the EVK are:

DCD	RXD
TXD	DTR
GND	DSR
RTS	CTS
RI	GND

Reproduction forbidden without DAI Telecom written authorization – All Right reserved – Right of modification reserved

4.1 RS232 level translation

In order to interface the Telit GM862-QUAD with a PC com port or a RS232 (EIA/TIA-232) application a level translator is required. This level translator must

- invert the electrical signal in both directions

- change the level from 0/3V to +15/-15V

Actually, the RS232 UART 16450, 16550, 16650 & 16750 chipsets accept signals with lower levels on the RS232 side (EIA/TIA-562) , allowing for a lower voltage-multiplying ratio on the level translator. Note that the negative signal voltage must be less than 0V and hence some sort of level translation is always required.

The simplest way to translate the levels and invert the signal is by using a single chip level translator. There are a multitude of them, differing in the number of driver and receiver and in the levels (be sure to get a true RS232 level translator not a RS485 or other standards).

By convention the driver is the level translator from the 0-3V UART level to the RS232 level, while the receiver is the translator from RS232 level to 0-3V UART.

In order to translate the whole set of control lines of the UART you will need:

- 5 driver
- 3 receiver

NOTE: The digital input lines working at 2.8VCMOS have an absolute maximum input voltage of 3,75V; therefore the level translator IC shall not be powered by the +3.8V supply of the module. Instead it shall be powered from a +2.8V / +3.0V (dedicated) power supply.

This is because in this way the level translator IC outputs on the module side (i.e. GM862-QUAD inputs) will work at +3.8V interface levels, stressing the module inputs at its maximum input voltage.

This can be acceptable for evaluation purposes, but not on production devices.

Reproduction forbidden without DAI Telecom written authorization – All Right reserved – Right of modification reserved

An example of level translation circuitry of this kind is:

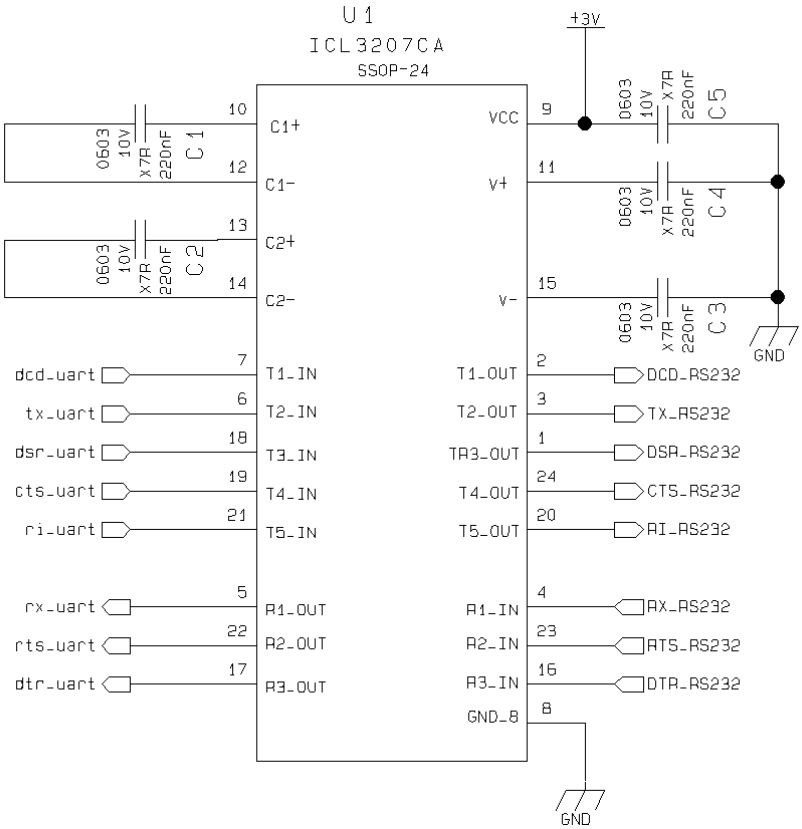

the RS232 serial port lines are usually connected to a DB9 connector with the following layout:

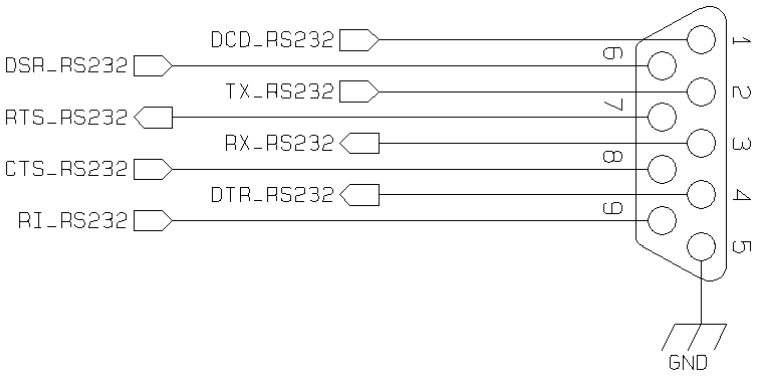

4.2 5V UART level translation

If the OEM application uses a microcontroller with a serial port (UART) that works at a voltage different from 2.8 - 3V, then a circuitry has to be provided to adapt the different levels of the two set of signals. As for the RS232 translation there are a multitude of single chip translators, but since the translation requires very few components, then also a discrete design can be suited. For example a possible inexpensive translator circuit for a 5V driver can be:

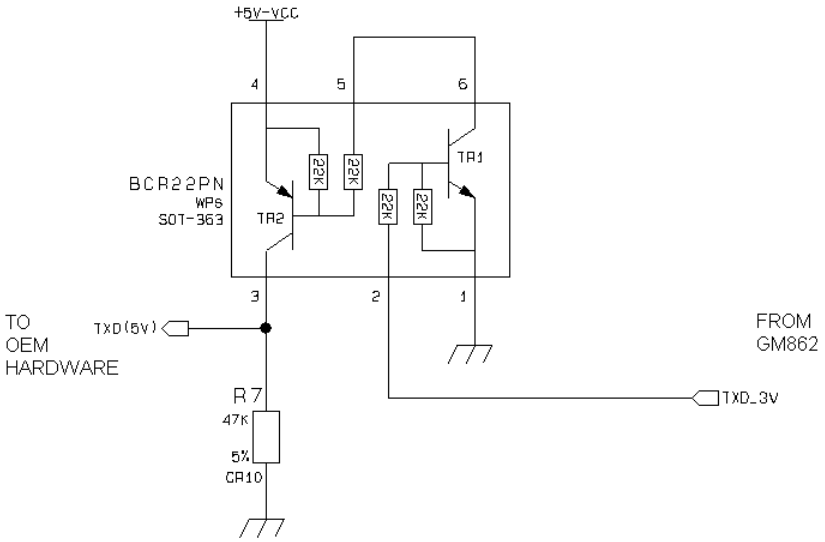

and for a 5V receiver:

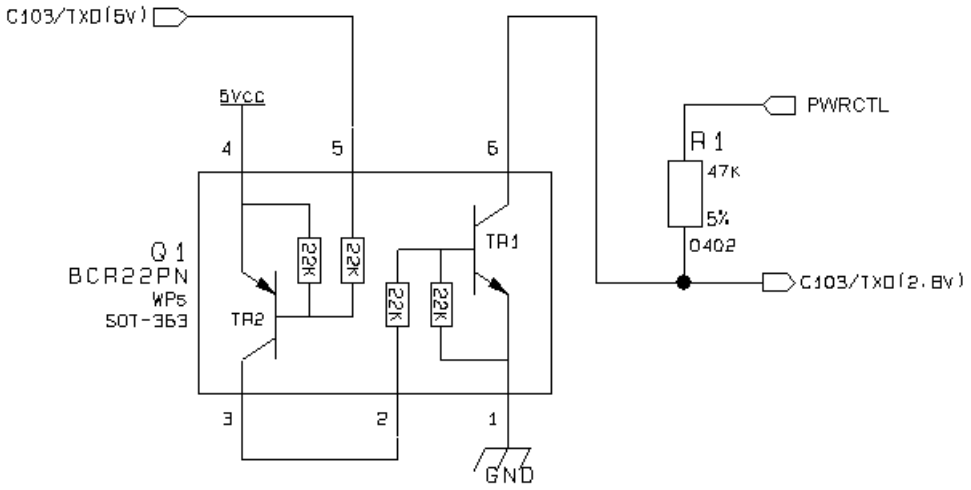

NOTE: The UART input line TXD (rx_uart) of the GM862-QUAD is NOT internally pulled up with a resistor, so there may be the need to place an external 47KΩ pull-up resistor, either the DTR (dtr_uart) and RTS (rts_uart) input lines are not pulled up internally, so an external pull-up resistor of 47KΩ may be required.

A power source of the internal interface voltage corresponding to the 2.8VCMOS high level is available at the PWRCTL pin on the connector, whose absolute maximum output current is 10mA.

A maximum of 9 47 KΩ pull-up resistors can be connected to the PWRCTL pin, provided no other devices are connected to it and the pulled-up lines are GM862-QUAD input lines connected to open collector outputs in order to avoid latch-up problems on the GM862-QUAD.

Care must be taken to avoid latch-up on the GM862-QUAD and the use of this output line to power electronic devices shall be avoided, especially for devices that generate spikes and noise such as level translators, digital ICs or microcontrollers, failure in any of these condition can severely compromise the GM862-QUAD functionality.

NOTE: The input lines working at 2.8VCMOS can be pulled-up with 47KΩ resistors that can be connected directly to the PWRCTL line provided they are connected as in this example.

NO OTHER devices should be powered with the PWRCTL line, otherwise the module functionality may be compromised.

Reproduction forbidden without DAI Telecom written authorization – All Right reserved – Right of modification reserved

5 Microphone

The microphone circuitry is the more noise sensitive and its design and layout must be done with particular care.

5.1 Microphone line Characteristic and requirements

The Telit GM862-QUAD provides two audio paths for the microphone and the earpiece: the internal and the external audio paths. Only one of the two paths can be active at a time and it is selectable by hardware line AXE or by AT command. The audio characteristics of the two paths are slightly different and this should be kept in mind when designing. The internal audio path should be used for handset function, while the external audio path is suited for hands free function (car kit).

Both microphone paths from the Telit GM862-QUAD are balanced and the OEM circuitry should be designed balanced to reduce the common mode noise typically generated on the ground plane, however for particular OEM application needs also an unbalanced circuitry can be used.

The microphone input lines characteristics are:

internal microphone path

- **line coupling:** **AC (100nF cond.)**
- **line type:** **balanced**
- **differential input resistance:** **25kΩ**
- **line nominal sensitivity:** **50 mV_{rms}**
- **max input voltage:** **360 mV_{rms}**
- **microphone nominal sensitivity/analog gain suggested:** **-45 $dB_{Vrms/Pa}$ / +24dB**
- **echo canceller type:** **handset**

external microphone path

- **line coupling:** **AC (100nF cond.)**
- **line type:** **balanced**
- **differential input resistance:** **25kΩ**
- **line nominal sensitivity:** **3 mV_{rms}**
- **max input voltage:** **22 mV_{rms}**
- **microphone nominal sensitivity/analog gain suggested:** **-45 $dB_{Vrms/Pa}$ / +10dB**
- **echo canceller type:** **car kit hands free**

Reproduction forbidden without DAI Telecom written authorization – All Right reserved – Right of modification reserved

TIP: Due to the difference in the echo canceller type, the internal audio path is suited for handset applications while the external audio path is suited for car kit hands free. The headset applications should be made by using the external audio path but DISABLING the echo canceller by software AT command. If the echo canceller is left active with the headset, then some echo might be introduced by the echo cancel algorithm.

The nominal sensitivity of the line indicates the voltage level on the GM862-QUAD pins that should be present during "normal spoken" conditions: for a handset a voice signal coming from the mouth of the talker at 7 cm of distance from the microphone, producing an acoustic pressure of -4,7 dB_{Pa} (@ 1 kHz) on the microphone membrane.

For example:

With the internal mic. having the suggested nominal sensitivity $-45dB_{Vrms/Pa}$

at the "normal spoken" conditions: $-4.7dB_{Pa}$ *on the microphone membrane.*

At that acoustic pressure the voltage output from the microphone is:

$$\text{Voltage Output (dB)} = (-45) + (-4.7) = -49.7\ dB_{Vrms}$$

corresponding to:

$$\text{Voltage Output} = 10^{(-49.7/20)} = 3.3 * 10^{-3}\ V_{rms}$$

by having the microphone gain set to +24 dB (corresponding to 15.8 times) the signal in the nominal conditions on the input mic. pins of the GM862-QUAD will be:

$$\text{Voltage @ GM862-QUAD_mic} = 3.3 * 10^{-3} * 15.8 = 51\ mV_{rms}$$

During the spoken conditions the signal varies according to the volume of the voice of the talker, usually a rough thumb rule for the dynamic range may be considered:

* +20dB (10 times) at maximum voice level (talker screaming)

* -50 dB (1/300 times) at minimum voice level (talker whispering).

For the handsfree/car kit microphone the voice attenuation due to the distance between the microphone and the talker must be taken into account when designing the microphone amplifier.

For a car cabin usually the distance between the talker and the mic. is about 50cm; in these conditions the attenuation can be considered as a thumb rule around 20dB.

Another thing to consider, especially for cabin car use, is the fact that the external mic. will pick up also ambient noise; to overcome this problem it is preferable to set the gain of the microphone 10dB lower with respect to the calculated value for a nominal sensitivity. The corresponding reduction in signal level will be compensated by an increased voice volume of the talker which will speak louder because of the ambient noise.

Reproduction forbidden without DAI Telecom written authorization – All Right reserved – Right of modification reserved

For the headset we shall distinguish two different types: the headsets having the microphone sustained close to the mouth and the headsets having the microphone on the earpiece cable.

The same considerations for the additional voice attenuation due to the distance from the microphone and the noise pick up can be made for the headset having the microphone on the earpiece cable, while the other kind of headset shall be threaten as an handset.

For example:

With the external mic. having the suggested nominal sensitivity $-45dB_{Vrms/Pa}$

at the "normal spoken" conditions: $-4.7dB_{Pa}$ *at 7 cm from the mouth of the talker and with a further attenuation of 20dB due to the distance from the microphone (about 50 cm).*

At that acoustic pressure the voltage output from the microphone is:

$$Voltage\ Output\ (dB) = (-45) + (-4.7) - 20 = -69.7\ dB_{Vrms}$$

corresponding to:

$$Voltage\ Output = 10^{(-69.7/20)} = 3.3 * 10^{-4}\ V_{rms}$$

by having the microphone gain set to +10 dB (corresponding to 3 times) the signal in the nominal conditions on the input external mic. pins of the GM862-QUAD will be:

$$Voltage\ @\ GM862\text{-}QUAD__extmic = 3.3 * 10^{-4} * 3 = 1\ mV_{rms}$$

Hence in these conditions the signal level on the input pins of the external mic. of the GM862-QUAD is 10 dB (3 times) lower than the nominal, as suggested.

The microphones usually need a biasing network that provides the necessary DC current to the mic., this will be explained further on.

In the EVK all the microphone input jacks have the hot wire connected to the central pole.

Reproduction forbidden without DAI Telecom written authorization – All Right reserved – Right of modification reserved

5.2 General Design Rules

There are several configurations for the audio path, but the most effective difference is between balanced and unbalanced microphone.

It is highly recommended to keep the whole microphone path balanced even if this means having 2 wires connecting the microphone instead of one needed (plus ground) in the unbalanced case. The balanced circuitry is more suited because of its good common mode noise rejection, reducing the 216 Hz burst noise produced during the GSM transmissions.

- Where possible use balanced microphone circuitry
- Keep the microphone traces on the PCB and wires as short as possible.
- If your application requires an unbalanced microphone, then keep the lines on the PCB balanced and "unbalance" the path close to the microphone wire connector if possible.
- For the microphone biasing voltage use a dedicated voltage regulator and a capacitor multiply circuit.
- Make sure that the microphone traces in the PCB don't cross or run parallel to noisy traces (especially the power line)
- If possible put all around to the microphone lines a ground trace connected to the ground plane by several vias. This is done in order to simulate a shielded trace on the PCB.
- The biasing circuit and eventually the buffer can be designed in the same manner for the internal and external microphones.

5.3 Microphone Biasing

The electret microphones usually need a biasing voltage to work properly. Refer to your microphone provider for the characteristics required.

NOTE: The microphones have a hot wire were the positive biasing must be connected, usually it is indicated by a + sign or a red point. If the polarity of the bias is reversed, then the microphone will not work properly. For this reason be sure to respect the mic. biasing polarity.

Reproduction forbidden without DAI Telecom written authorization – All Right reserved – Right of modification reserved

5.3.1 Balanced Microphone biasing

The balanced microphone bias voltage should be obtained from a dedicated voltage regulator, in order to eliminate the noise present on the power lines. This regulator can be the same for all the audio paths. The microphone should be supplied from a capacitor multiply circuit.

For example a circuit for the balanced microphone biasing can be:

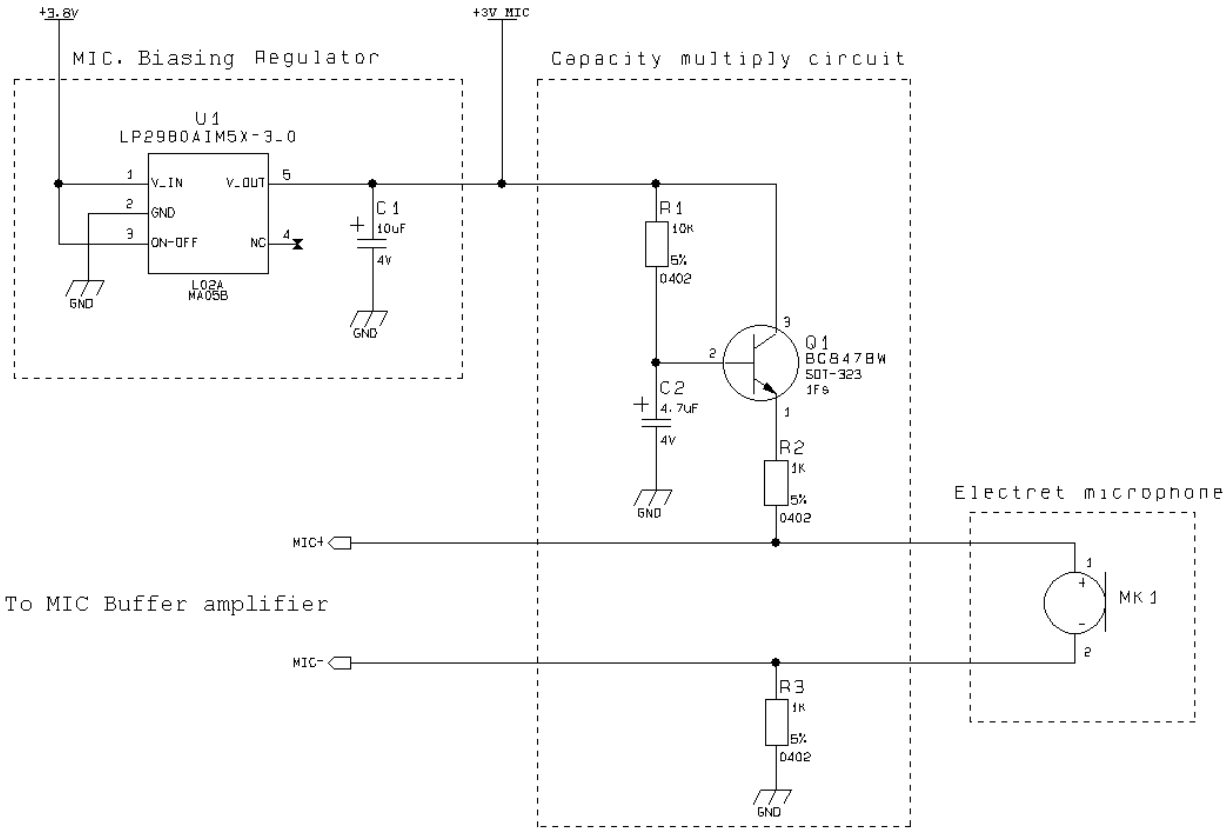

NOTE: In the balanced application the resistors R2 and R3 must have the same value to keep the circuit balanced.

NOTE: The cable to the microphone should not be shielded, instead a twisted pair cable shall be used.

NOTE: The microphone sensitivity changes with the value of R2 and R3. Usually the microphones are characterized with 2kΩ biasing resistance, so try to keep the sum of R2 and R3 around 2kΩ. Refer to your microphone manufacturer for the mic. characteristics.

Reproduction forbidden without DAI Telecom written authorization – All Right reserved – Right of modification reserved

5.3.2 Unbalanced Microphone biasing

The unbalanced microphone biasing voltage should be obtained from a dedicated voltage regulator, in order to eliminate the noise present on the power lines. This regulator can be the same for all the audio paths. The microphone should be supplied from a capacitor multiply circuit.

For example a circuit for the unbalanced microphone biasing can be:

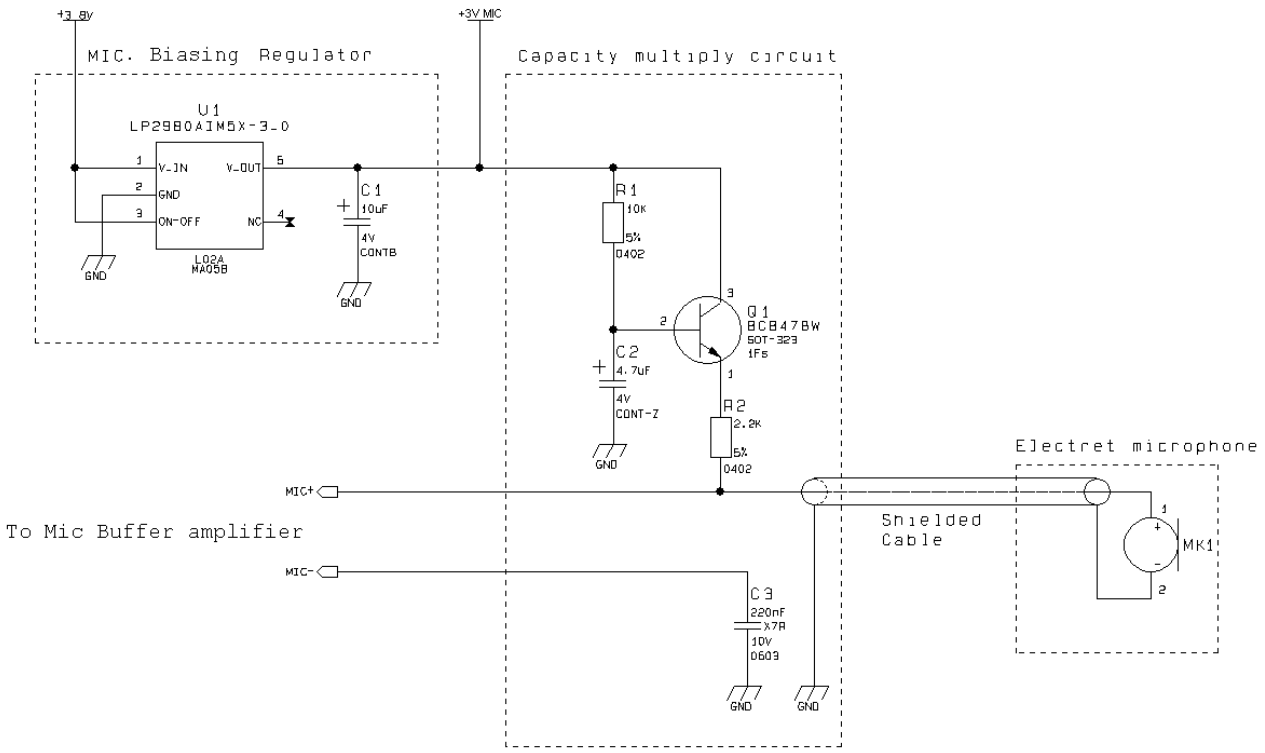

NOTE: In the unbalanced application the capacitor C3 shall be > 200nF otherwise the frequency response will be cut at low band frequencies (down to 300Hz). This capacitor can be placed close to the MIC- pin (EXT_MIC- or INT_MIC- depending on the audio path chosen) or if possible it should be placed close to the shielded cable connector. If the ground return path is well designed, then it is possible to eliminate the C3 capacitor, provided the buffer is close to the mic. input.

NOTE: The cable to the microphone should be shielded.

NOTE: The microphone sensitivity changes with the value of R2. Usually the microphones are characterized with 2kΩ biasing resistance, so try to keep the value of R2 around 2kΩ. For mic. characteristics refer to the manufacturer.

Reproduction forbidden without DAI Telecom written authorization – All Right reserved – Right of modification reserved

5.4 Microphone buffering

As seen previously, a microphone shall be connected to the input pins of the GM862-QUAD through a buffer amplifier that boosts the signal level to the required value.

Again the buffered microphone circuitry can be balanced or unbalanced. Where possible it is always preferable a balanced mic. solution. The buffering circuit shall be placed close to the microphone or close to the microphone wire connector.

5.4.1 Buffered Balanced Mic.

A sample circuit can be:

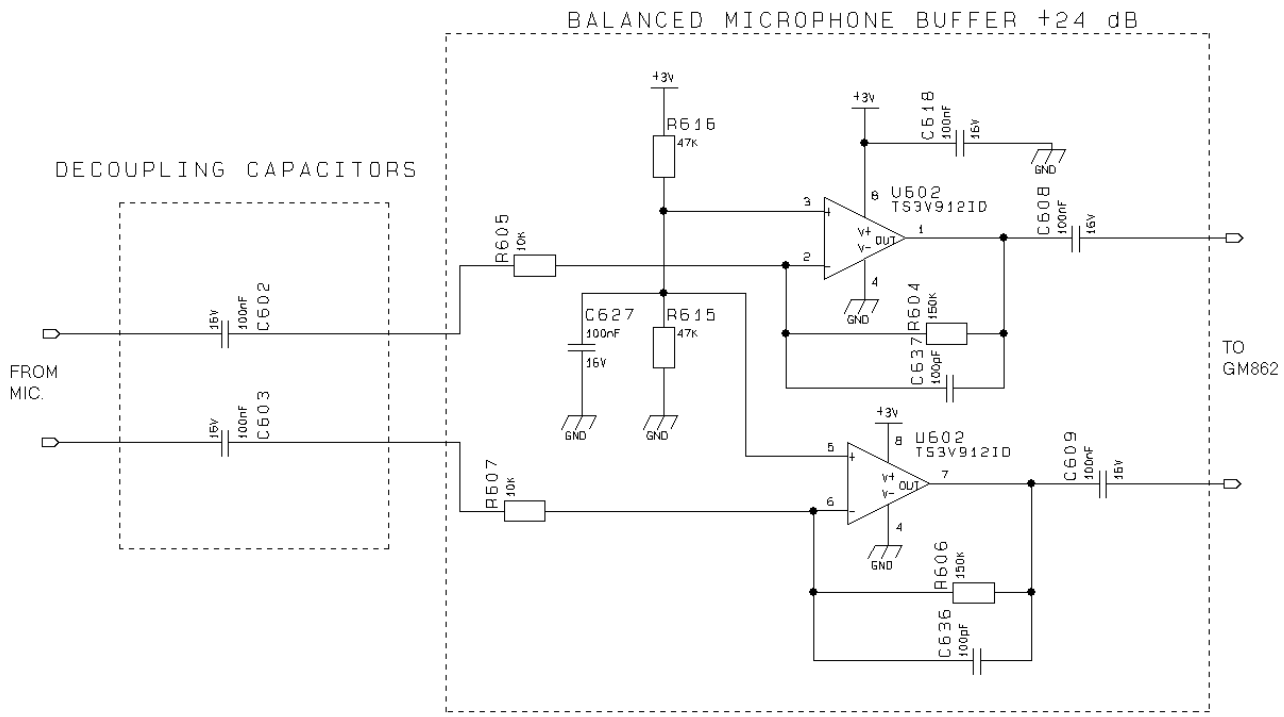

This circuit has a gain of 15 times (+24 dB), and is therefore suited for the internal mic. input, having a microphone with a sensitivity close to the suggested one (-45 $dB_{Vrms/Pa}$), if the used microphone has a different sensitivity, or if the buffer is connected to the external mic. input, then a gain adjustment shall be done by changing resistors R604-R605 and R606-R607 and as a consequence the capacitors C636 and C637 to maintain the bandwidth 150-8000 (-3dB).

The buffer gain is given by the formula:

$$Gain = \frac{R604}{R605} = \frac{R606}{R607}$$

The C636 and C637 capacitors are placed in order to cut off the gain at higher frequencies than the transmitted GSM band, the cutoff frequency (-3dB) should be 8 kHz in order to have -1dB at 4Khz.

The cutoff frequency is given by the formula:

Reproduction forbidden without DAI Telecom written authorization – All Right reserved – Right of modification reserved

$$freq. = \frac{1}{2\pi * R604 * C637} = \frac{1}{2\pi * R606 * C636} \text{ [Hz]}$$

For example:

- Let's assume you have a microphone with these characteristics:

- sensitivity -45 $dB_{Vrms/Pa}$

and you want to use it in the internal mic. audio path.

With the mic. having nominal sensitivity -45$dB_{Vrms/Pa}$ at the "normal spoken" conditions: -4.7dB_{Pa} at 7 cm from the mouth of the talker.

At that acoustic pressure the voltage output from the microphone is:

$$\text{Mic Voltage Output (dB)} = (-45) + (-4.7) = -49.7\ dB_{Vrms}$$

corresponding to:

$$\text{Mic_Voltage_Output} = 10^{(-49.7/20)} = 3.3 * 10^{-3}\ V_{rms}$$

in order to have a signal of 50 mV_{rms} on the GM862-QUAD internal mic. inputs then the buffer must have a gain of:

$$\text{Voltage @ GM862-QUAD_intmic/ Mic_Voltage_Output} = (50 * 10^{-3})/(3.3 * 10^{-3}) = 15$$

Hence in these conditions the signal level on the input pins of the internal mic. of the GM862-QUAD is 24 dB (15 times) higher than the microphone output and therefore the buffer has to gain 24 dB.

The corresponding values for the resistors on the buffer could be (if we keep the input resistance 10kΩ)

$$R604 = R606 = gain * R603 = gain * R605 = 15 * 10 = 150\ k\Omega$$

The commercial values of 150kΩ & 10kΩ are then chosen.

As a consequence the values of the capacitors C636 and C637 shall be:

$$C636 = C637 = 1/(2\pi * 8000 * R606) = 132 * 10^{-12}\ F$$

A commercial value of 100pF is then chosen.

Reproduction forbidden without DAI Telecom written authorization – All Right reserved – Right of modification reserved

5.4.2 Buffered Unbalanced (Single Ended) Mic.

A sample schematic for a buffered unbalanced (single ended) microphone can be:

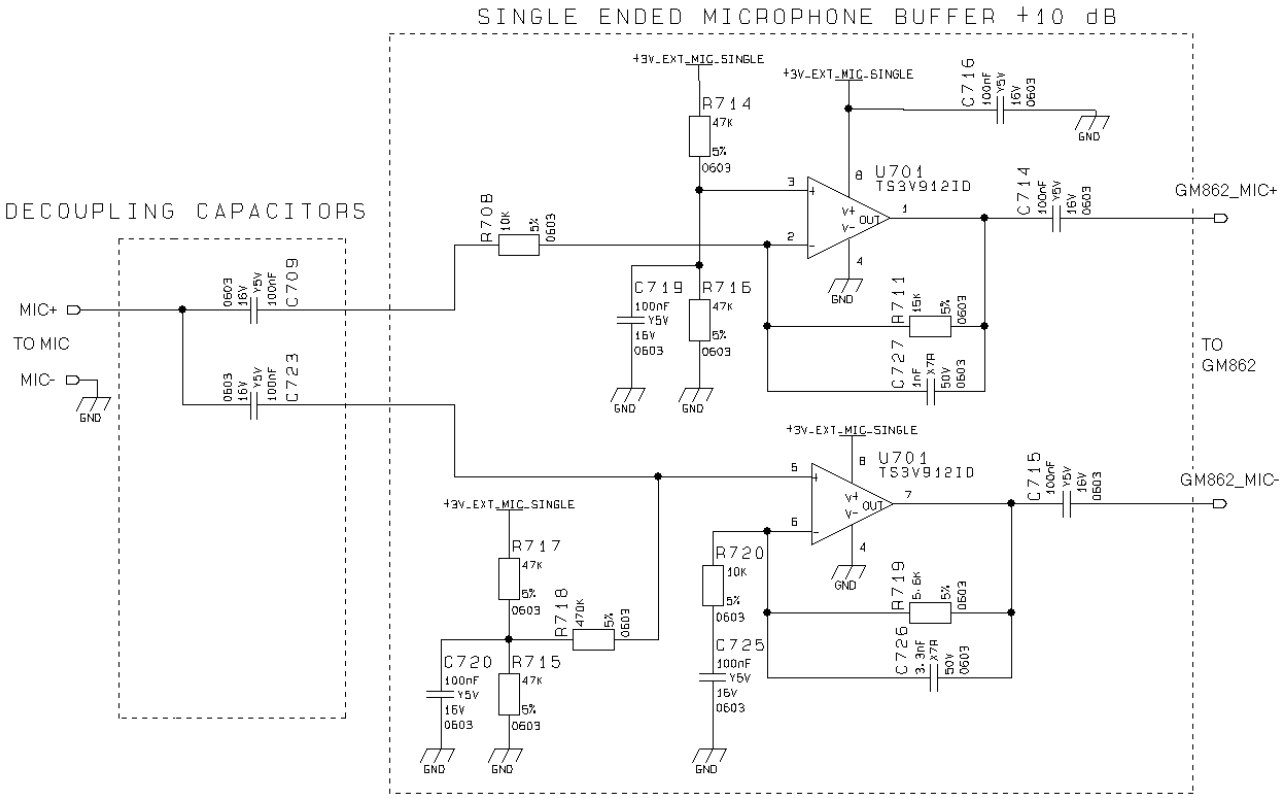

The schematic does not include the required mic. biasing circuitry. For the biasing the same circuit as seen before can be used; to be noticed that the capacitor C3 on the unbalanced biasing circuit is not anymore needed if this Buffered design is used.

Two different configurations are used, one inverting and the other not inverting, hence an additional +6dB (2 times) gain is achieved by doubling the mic. signal path.

The gain of the not inverting buffer is given by the formula:

$$Gain = 1 + \frac{R719}{R720}$$

and hence it cannot be less than 1. In the example shown the gain of the not inverting buffer is 1,5 (4dB).

While the gain of the inverting buffer is given by the formula:

$$Gain = \frac{R711}{R708}$$

As shown in the balanced buffered mic. the gain adjustments can be done by changing R719 - R720 and R708 - R711 and as a consequence the capacitors C726 and C727.

Reproduction forbidden without DAI Telecom written authorization – All Right reserved – Right of modification reserved

The bandwidth (-3dB) is given by the approximated formula (considering C725 >> C726) :

$$freq. = \frac{1}{2\pi * R719 * C726} = \frac{1}{2\pi * R711 * C727} \text{ [Hz]}$$

The buffer bandwidth at -3dB shall be 8kHz.

Note that the biasing of the operational amplifier is given for the inverting amplifier by the series divider R714-R715. The 100nF capacitor C719 is needed to filter the noise that could be coupled to that divider. For the not inverting operational the biasing is given by a different divider R715-R717 with the capacitor C720 and through a series resistor R718 of 470KΩ.

For example:

- Let's assume you have a microphone with these characteristics:

- sensitivity -45 $dB_{Vrms/Pa}$

and you want to use it in the external mic. audio path.

With the mic. having nominal sensitivity -45$dB_{Vrms/Pa}$ at the "normal spoken" conditions: -4.7dB_{Pa} but at 50 cm from the mouth of the talker an additional 20 dB loss shall be considered.

At that acoustic pressure the voltage output from the microphone is:

$$\text{Mic Voltage Output (dB)} = (-45) + (-4.7) - 20 = -69.7\ dB_{Vrms}$$

corresponding to:

$$Mic_Voltage_Output = 10^{(-69.7/20)} = 3.3 * 10^{-4}\ V_{rms}$$

in order to have a signal of 1 mV_{rms} (10 dB lower than the nominal input for the GM862-QUAD external mic. path) on the GM862-QUAD internal mic. inputs then the buffer must have a gain of:

$$\text{Voltage @ GM862-QUAD_intmic/ Mic_Voltage_Output} = (1 * 10^{-3})/(3.3 * 10^{-4}) = 3$$

Hence in these conditions the signal level on the input pins of the internal mic. of the GM862-QUAD is 10 dB (3 times) higher than the microphone output and therefore the buffer has to gain 10 dB.

To calculate the resistor values it must be kept in mind that balancing the line will double the signal and hence already add +6 dB, therefore the buffer must gain only 1.5 times.

The corresponding values for the resistors on the buffer could be (if we keep the input resistance 10kΩ)

$$R711 = gain * R708 = 1.5 * 10 = 15\ k\Omega$$

$$R719 = (gain - 1) * R720 = (1.5 - 1) * 10 = 5\ k\Omega$$

The commercial values of 15kΩ & 5.6kΩ are then chosen.

Reproduction forbidden without DAI Telecom written authorization – All Right reserved – Right of modification reserved

As a consequence the values of the capacitors C726 and C727 shall be:

$$C726 = 1/(2\pi * 8000 * R719) = 3.5 * 10^{-9}\ F$$

$$C727 = 1/(2\pi * 8000 * R711) = 1{,}2 * 10^{-9}\ F$$

The commercial values of 3.3nF and 1nF are then chosen.

Reproduction forbidden without DAI Telecom written authorization – All Right reserved – Right of modification reserved

6 Speaker

6.1 Speaker lines characteristics and requirements

The Telit GM862-QUAD provides two audio paths for both the microphone and the earpiece: the internal and the external audio paths. Only one of the two paths can be active at a time and it is selectable by hardware line AXE or by AT command. The audio characteristics of the two paths are slightly different and this should be kept in mind when designing your application. The internal audio path should be used for handset function, while the external audio path is suited for hands free function (car kit).

Both speaker outputs from the Telit GM862-QUAD are bridged type and the OEM circuitry shall be designed bridged to reduce the common mode noise typically generated on the ground plane and to get the maximum power output from the device; however for particular OEM application needs also a single ended circuitry can be designed.

The GM862-QUAD speaker output lines characteristics are:

internal speaker path (EAR_MT+ , EAR_MT-)

- **line coupling:** **DC**
- **line type:** **bridged**
- **speaker impedance (operating conditions):** **≥ 16 Ω ± 5% @ 1kHz**
- **minimum load impedance:** **15 Ω**
- **signal bandwidth:** **150 - 8000 Hz @ -3 dB**
- **maximum differential output:** **850 mV_{rms}**
- **rated output power:** **10 mW**
- **maximum power output:** **30 mW**
- **volume level steps (SW):** **- 2 dB**
- **number of volume steps(SW):** **10**

external speaker path (EAR_HF+ , EAR_HF-)

- **line coupling:** **DC**
- **line type:** **bridged**
- **speaker impedance (operating conditions):** **≥ 16 Ω ± 15% @ 1kHz**
- **minimum load impedance:** **15 Ω**
- **signal bandwidth:** **150 - 8000 Hz @ -3 dB**
- **maximum differential output:** **425 mV_{rms}**
- **rated output power:** **2.5 mW**

Reproduction forbidden without DAI Telecom written authorization – All Right reserved – Right of modification reserved

- **maximum power output:** **7.5 mW**
- **volume level steps (SW):** **- 2 dB**
- **number of volume steps (SW):** **10**

The EVK v.1.2 audio output characteristics are:

internal/external ear single ended

- **line coupling:** **AC**
- **line type:** **single ended referred to GND**
- **speaker impedance (operating conditions):** **≥ 8 Ω**
- **minimum load impedance:** **8 Ω**
- **signal bandwidth:** **150 - 8000 Hz @ -3 dB**
- **maximum output:** **800 mV_{rms}**
- **maximum power output:** **80 mW @ 8 Ω**
- **THD+N** **1% @ 80mW**

internal/external ear bridged

- **line coupling:** **DC**
- **line type:** **bridged not referred to GND**
- **speaker impedance (operating conditions):** **≥ 8 Ω**
- **minimum load impedance:** **8 Ω**
- **signal bandwidth:** **150 - 8000 Hz @ -3 dB**
- **maximum output:** **1.6 V_{rms}**
- **maximum power output:** **320 mW @ 8 Ω**
- **THD+N** **1% @ 330mW**

high power external ear

- **line coupling:** **DC**
- **line type:** **bridged not referred to GND**
- **speaker impedance (operating conditions):** **≥ 4 Ω**
- **minimum load impedance:** **4 Ω**
- **signal bandwidth:** **150 - 8000 Hz @ -3 dB**
- **maximum power output:** **6 W**
- **THD+N** **10% @ 6 W**

Reproduction forbidden without DAI Telecom written authorization – All Right reserved – Right of modification reserved

6.2 General Design rules

There are several configurations for the audio output path, but the various design requirements can be grouped into three different categories:

- handset earphone (low power, typically a handset)
- hands free earphone (low power, typically a headset)
- car kit speakerphone (high power, typically a speaker)

The three groups have different power requirements, usually the first two applications need only few mW of power, which can be directly drained from the GM862-QUAD pins, provided a suited speaker is used. This direct connect design is the cheaper and simpler solution and will be suited for the most of the earphone design requirements. There's no need to decouple the output ear lines if a suited earpiece is connected. For the last group, the speakerphone, a power amplifier is required to raise the output power up to 5-10W required in a car cabin application.

All the designs shall comply with the following guidelines:

- Where possible use a bridged earphone circuitry, to achieve the maximum power output from the device.
- Keep the earphone traces on the PCB and wires as short as possible.
- If your application requires a single ended earpiece and you want a direct connection, then leave one of the two output lines open and use only the other referred to ground. Remember that in this case the power output is 4 times lower than the bridged circuit and may not be enough to ensure a good voice volume.
- Make sure that the earphone traces in the PCB don't cross or run parallel to noisy traces (especially the power line)
- The cable to the speaker shall be a twisted pair with both the lines floating for the bridged output type, shielded with the shield to ground for the single ended output type.

6.2.1 Noise Filtering

The I/O of the PCB should have a noise filter close to the connector, to filter the high frequency GSM noise. The filter can be a Π of 2 capacitor and a inductance, with the one capacitor of 39pF - 0603 case , and the other capacitor of 1nF - 0603; the inductance shall have a value of 39µH .

6.3 Handset earphone design

As seen previously, a 16Ω speaker can be directly connected to the output pins EAR_MT+ and EAR_MT- of the GM862-QUAD.

This solution is often the more cost effective, reducing the components count to a minimum. There are several limitations to the use of this solution: speaker direct connect imposes the speaker characteristics to be almost exactly the suggested ones, otherwise the power output may be reduced

Reproduction forbidden without DAI Telecom written authorization – All Right reserved – Right of modification reserved

(if speaker impedance is bigger than 16Ω) or the GM862-QUAD ear port may be damaged (if speaker impedance is less than 15Ω).

The other limitation of the speaker direct connection is the power output capability of the GM862-QUAD which is limited and for some particular applications may not be enough.

For these reasons, when the power output of the GM862-QUAD is not enough or if the speaker characteristics are different from the suggested, then it is preferable to use an amplifier to increase the power and current output capabilities.

Again the output from the GM862-QUAD is bridged and both lines should be used, where possible, as inputs to the power amplifier. This ensures a higher common mode rejection ratio, reducing the GSM current busts noise on the speaker output.

In this case the EAR_MT lines from the GM862-QUAD should be AC coupled with a capacitor of 100nF.

It is always desirable to have a mute control on the amplifier, in order to turn it off while the device is not sending signal to the output, in this manner the amplifier background noise which may be audible during idle conditions is cut off.

A principle schematic may be:

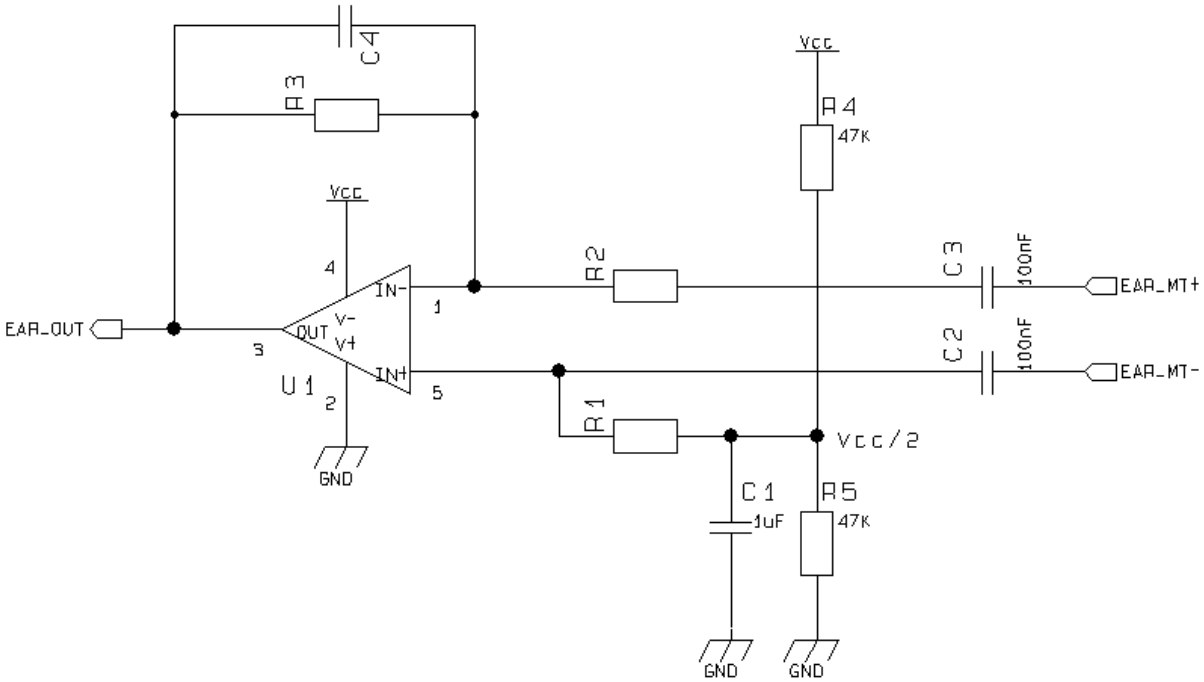

The resulting gain and high pass cut can be obtained with the formula:

$$Gain = \frac{R3}{R2}$$

$$freq. = \frac{1}{2\pi * R3 * C4} \text{ [Hz]}$$

And an example of internal Ear amplifier is:

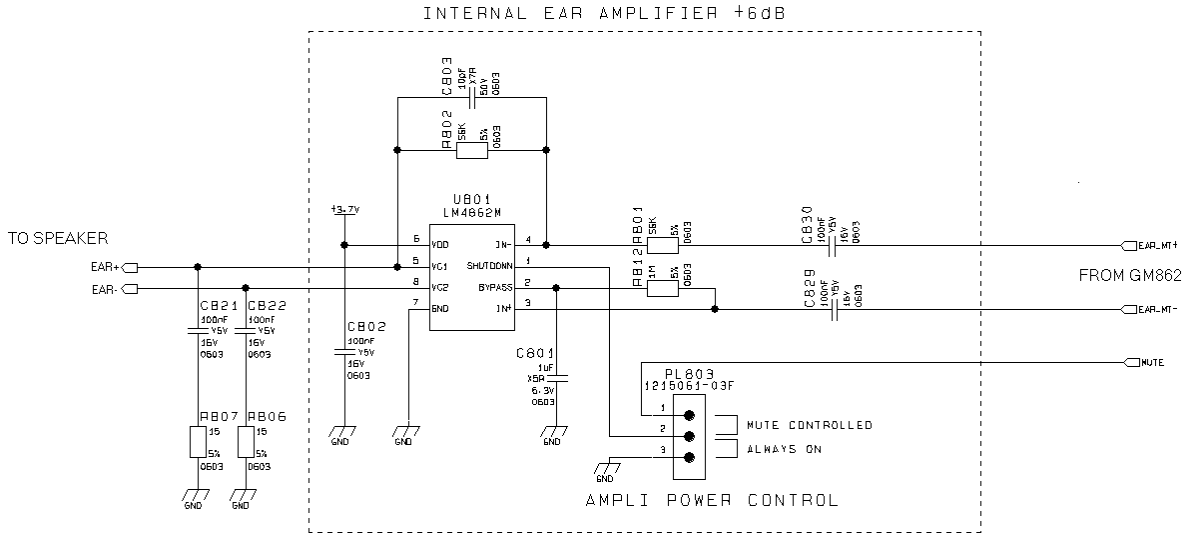

Some amplifier require a low impedance load at high frequency in order to avoid auto oscillation, this can be made with a capacitor (100nF) in series with a resistor (15Ω).

When designing your application, remember to provide an adequate bypass capacitor to the amplifier and place it close to the power input pin of the IC, keeping the traces as short as possible.

6.4 Hands Free earphone (low power) design

The same design considerations made for the handset are valid for the hands free earphone, the only difference is that the external ear audio output level from the GM862-QUAD is 6dB lower than the internal one, so the gain of the amplifier must be 6dB higher to provide the same audio level.

6.5 Car Kit speakerphone design

For the car kit speaker phone function the power output requirement is usually at least 4W, therefore an amplifier is needed to boost the GM862-QUAD output.

The design of the amplifier shall comply with the following guidelines:

- The input to the amplifier MUST be taken from the external audio path (EAR_HF+, EAR_HF-) of the GM862-QUAD, because of its echo canceller parameters suited to a car cabin use.
- The amplifier shall have a gain of 30-40 times (29-32 dB) to provide the desired output power of 5-10W with the signal from the GM862-QUAD external audio output lines (EAR_HF).
- If the amplifier has a fixed gain then it can be adjusted to the desired value by reducing the input signal with a resistor divider network.

Reproduction forbidden without DAI Telecom written authorization – All Right reserved – Right of modification reserved

- The amplifier shall have a mute control to be used while not in conversation. This results in two benefits: eliminating the background noise when not in conversation and saving power.
- The power to the amplifier should be decoupled as much as possible from the GM862-QUAD power supply, by either keeping separate wires and placing bypass capacitors of adequate value close to the amplifier power input pins.
- The biasing voltage of the amplifier shall be stabilised with a low ESR (e.g. a tantalum) capacitor of adequate value.

NOTE: The GM862-QUAD audio path connected to the car kit hands free amplifier MUST be the external one (EAR_HF), otherwise the echo cancellation will not be done due to the difference in the echo canceller characteristics of the GM862-QUAD internal audio path from the external audio path.

An example of car kit amplifier schematic can be:

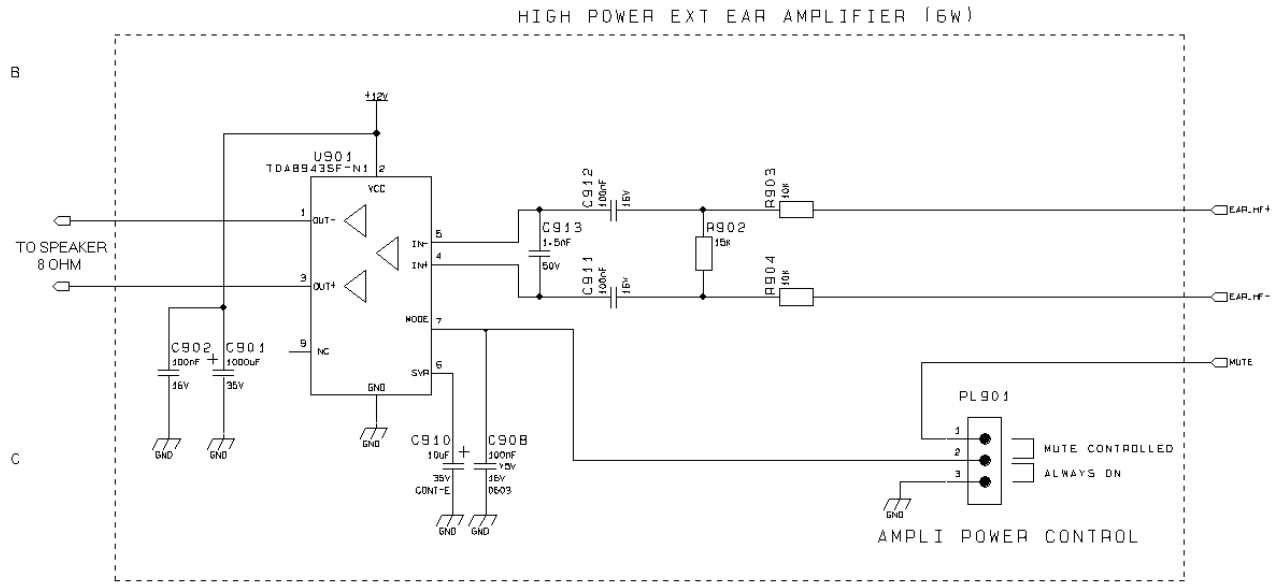

7 General Purpose I/O

The general purpose I/O pins can be configured to act in three different ways:

- input
- output
- alternate function (internally controlled)

Input pins can only be read and report the digital value (high or low) present on the pin at the read time; output pins can only be written or queried and set the value of the pin output; an alternate function pin is internally controlled by the GM862-QUAD firmware and acts depending on the function implemented.

Not all GPIO pins support all these three modes:

- GPIO1 is an INPUT ONLY
- GPIO2 is an OUTPUT ONLY (open collector)
- GPIO3, GPIO4 and GPIO5 support both input or output mode but not Alternate function.
- GPIO6 supports all three modes and can be input, output, alarm output (Alternate function)
- GPIO7 supports all three modes and can be input, output, buzzer output (Alternate function)

All GPIO pins except from GPIO1 and GPIO2 that are buffered with a transistor, are 2.8V CMOS signals and their interface levels are the same specified in the paragraph 4 Serial Port.

7.1 Using a GPIO pin as INPUT

The GPIO pins, when used as inputs, can be connected to a digital output of another device and report its status, provided this device has interface levels compatible with the 2.8V CMOS levels of the GPIO.

If the digital output of the device to be connected with the GPIO input pin has interface levels different from the 2.8V CMOS, then it can be connected to GPIO1 or can be buffered with an open collector transistor, provided a 47KΩ pull-up resistor is connected as seen in the paragraph 4.2 5V UART level translation.

7.2 Using a GPIO pin as OUTPUT

The GPIO pins, when used as outputs, can drive 2.8V CMOS digital devices or compatible hardware. When set as outputs, the pins (except from GPIO2 which is Open Collector) have a push-pull output and therefore the pull-up resistor may be omitted.

The GPIO2 pin, since it is an Open Collector output needs an external pull-up resistor.

Reproduction forbidden without DAI Telecom written authorization – All Right reserved – Right of modification reserved

7.3 Using the Alarm Output GPIO6

The GPIO6 pin, when configured as Alarm Output, is controlled by the GM862-QUAD module and will rise when the alarm starts and fall after the issue of a dedicated AT command.

This output can be used to power up the GM862-QUAD controlling microcontroller or application at the alarm time, giving you the possibility to program a timely system wake-up to achieve some periodic actions and completely turn off either the application and the GM862-QUAD during sleep periods, drammatically reducing the sleep comsumption to few µA.

In battery powered devices this feature will greatly improve the autonomy of the device.

7.4 Using the Buzzer Output GPIO7

The GPIO7 pin, when configured as Buzzer Output, is controlled by the GM862-QUAD module and will drive with appropriate square waves a Buzzer driver.

This permits to your application to easily implement Buzzer feature with ringing tones or melody played at the call incoming, tone playing on SMS incoming or simply playing a tone or melody when needed by your application.

A sample interface scheme is included below to give you an idea of how to interface a Buzzer to the

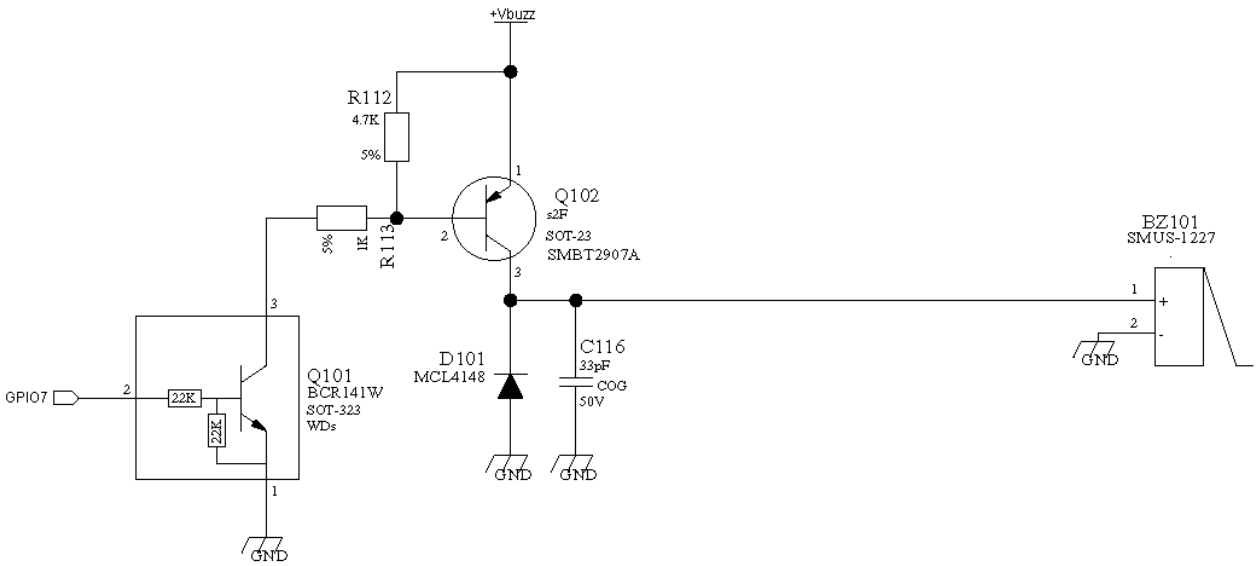

GPIO7:

NOTE: To correctly drive a buzzer a driver must be provided, its characteristics depend on the Buzzer and for them refer to your buzzer vendor.

Reproduction forbidden without DAI Telecom written authorization – All Right reserved – Right of modification reserved

8 Camera

8.1 Agilent Camera

The GM862-QUAD provides a direct support for digital cameras with the following characteristics:

Type:	**AGILENT ADCM2650**
Technology:	**CMOS COLOR camera**
Max picture size:	**VGA 640x480 pixels**
Output format:	**JPEG**
Sensitivity:	**5 lux**

8.1.1 Camera interface connectors

The interface connection between GM862-QUAD and camera is provided by the 50-pins Molex connector of the module and a 18-pins ZIF connector vertical type for the CMOS camera.

Molex 52991-0508 GM862				**ZIF CF21181V0RP**		
Pin	**Signal**	**I/O**	**Function**	**Pin**	**Signal**	**I/O**
21	CAM_SYNC	I	End of frame is an output for the camera and an input for the GM862-QUAD.	16	EOF	O
25	MON1_CAM	O	The module clock is provided by the MON1_CAM output of the GM862-QUAD.	17	MCLK	I
28	IICSCL_CAM	O	IICbus serial clock	4	S_CLK	I
32	PD(0)	I/O	Parallel Data 0	15	DATA0	I/O
34	PD(1)	I/O	Parallel Data 1	14	DATA1	I/O
38	PD(2)	I/O	Parallel Data 2	13	DATA2	I/O
40	PD(3)	I/O	Parallel Data 3	12	DATA3	I/O
42	PD(4)	I/O	Parallel Data 4	11	DATA4	I/O
44	PD(5)	I/O	Parallel Data 5	10	DATA5	I/O
46	PD(6)	I/O	Parallel Data 6	9	DATA6	I/O
49	PD(7)	I/O	Parallel Data 7	8	DATA7	I/O
47	IICSDA_CAM	I/O	IICbus serial data	3	S_DATA	I/O

Reproduction forbidden without DAI Telecom written authorization – All Right reserved – Right of modification reserved

48	CAM_DRDY	I	Data ready in an output for the camera and an input for the GM862-QUAD	7	DR	O
50	CAM_PWR_ON	O	2,8V power supply enable for the camera	2	VCC_MAIN	I
			Horizontal sync n.c.	6	HSYNC	O
			Input command for switching power ON or OFF	5	ON_OFF	I
2-4-6	GND		Ground	1-18	GND	

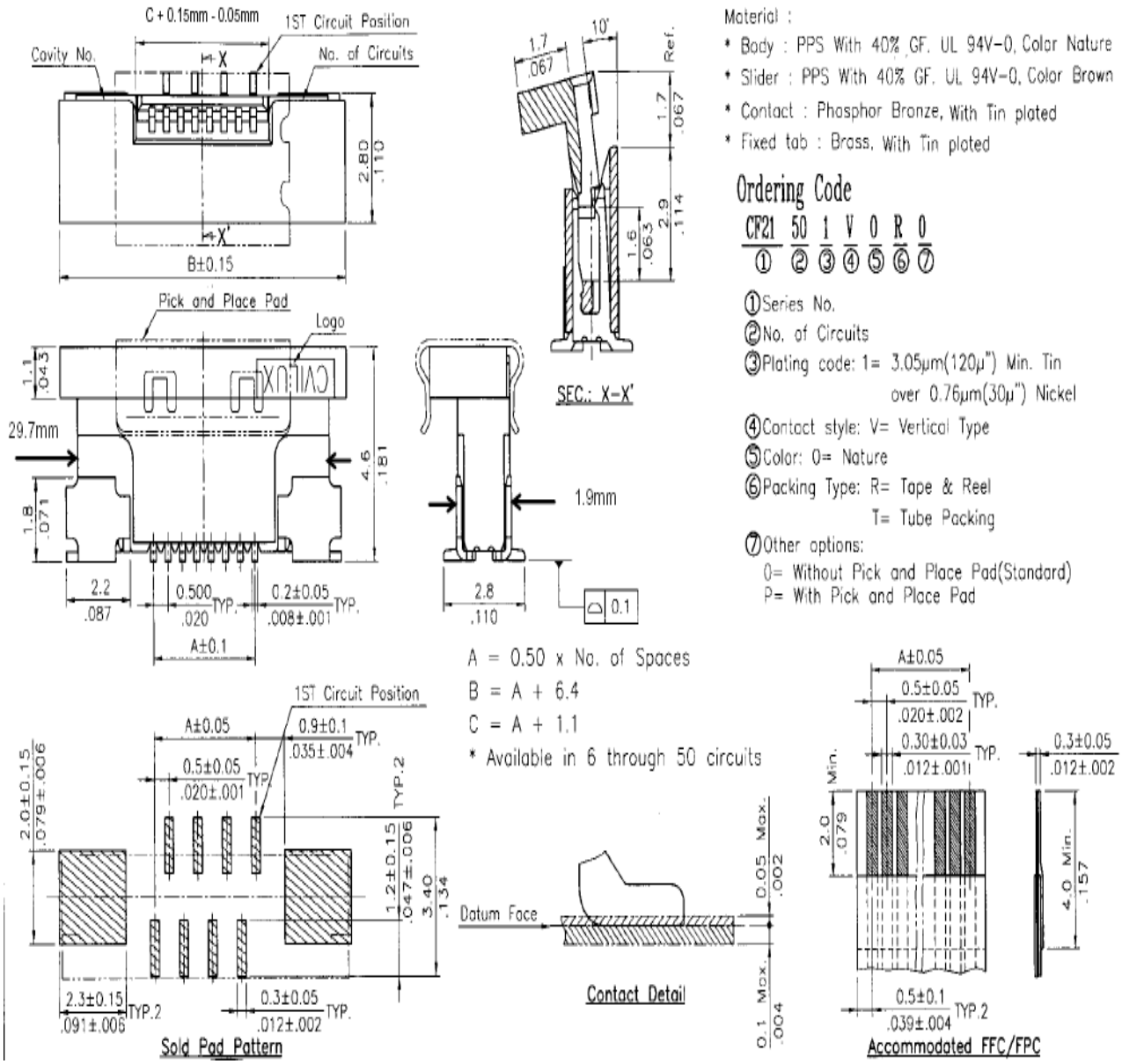

NOTE: GM862-QUAD is 100% pin-to-pin compatible with previous GM862 models. Therefore, in order to connect the camera to the standard 50-pins Molex industrial connector, some pins will have dual-function (GPIO pins, except for GPIO1): as usual GPIO operations or CAMERA support. See Molex PIN-OUT described in the GM862-QUAD Product description.

NOTE: The CMOS camera must be removed when the GPIO pins are used for I/O purpose.

NOTE: The white point on the ADCM2650 camera cable have to match with pin18 on ZIF connector.

8.1.2 EVB for camera support

In order to interface the Telit GM862-QUAD with a CMOS camera, Telit has developed an evaluation board. The EVB is provided by:

- 10 pin Berg male connector (PL201) and RS232 level translator that allows a direct connection to the PC. To switch on the level translator a jumper shall be set on PL203.
- 12 pin Berg male connector (PL202) to supply the GM862-QUAD mounted on the EVB. The input source power should be in the range 4,5V-12V. Charge line is also provided in case a Li-Ion battery is connected to the VBATT pins. Charge input must fulfil charger line requests.
- 50 pin Molex male connector (PL103) to interface with the GM862-QUAD directly.
- 30 pin Berg male connector (PL101) to interface with a PCB developed by the user or the EVK board. On this connector is available the complete audio path, the serial port lines with full handshaking, and the pins ON, AXE, RESET, GPIO1 and STAT_LED. Also the CHARGER_IN pin can be available placing a 0 ohm resistor.
- 18 pin ZIF female connector (SO101) for CMOS camera.
- ON/OFF button (SW102) to power on and off the module.
- GPIO1 button (SW101) for future applications.
- Led (DL101) for device status indication.

NOTE: The Philips 74LVC1G08GW must be placed close to the GM862 connector; the length of the line between CAMERA connector and MOLEX 50 PIN of GM862 must be max 5cm anyway.

NOTE: The CMOS cameras must be removed when the GPIO pins are used for I/O purpose.

Reproduction forbidden without DAI Telecom written authorization – All Right reserved – Right of modification reserved

8.2 Camera Transchip

The GM862-QUAD provides a direct support for Transchip digital cameras with the following characteristics:

Type:	**TRANSCHIP TC5747**
Technology:	**CMOS COLOR camera**
Max picture size:	**VGA 480x640 pixels landscape**
Output format:	**JPEG**
Sensitivity:	**4 Lux**

8.2.1Camera interface connectors

The 50-pins Molex connector of the module and a 24 pins ZIF connector for the CMOS camera provide the interface connection between GM862 and Transchip camera.

Molex 52991-0508 GM862				**TC5747MF24L**		
Pin	**Signal**	**I/O**	**Notes**	**Pin**	**Signal**	**I/O**
46	GPIO3 PD(6)	O	I2C bus serial clock	1	SCLK	I
2-4-6	GND		Ground	2	AGND	I
50	GPIO7 CAM_PWR_ON	O	External 2.8V Regulator enable controlled by CAM_PWR_ON pin	3	AVDD28*	I
34	GPIO9 PD(1)	O	Camera Reset	4	RESET_N	I
25	MON1 MON1_CAM	O	Clock	5	CLK_IN**	I
2-4-6	GND		Ground	6	DGND	I
	n.c			7	DOUT_0	I/O
	n.c			8	DOUT_1	I/O
	n.c			9	DOUT_2	I/O
	n.c			10	DOUT_3	I/O
	n.c			11	DOUT_4	I/O
	n.c			12	DOUT_5	I/O
	n.c			13	DOUT_6	I/O
	n.c			14	DOUT_7	I/O
	n.c			15	DOUT_8	I/O

Reproduction forbidden without DAI Telecom written authorization – All Right reserved – Right of modification reserved

	n.c			16	VCLKOUT	O
	n.c			17	VALIDH	O
	n.c			18	VALIDV	O
50	GPIO7 CAM_PWR_ON	O	External 2.8V Regulator enable controlled by CAM_PWR_ON pin	19	DVDD28	I
47	GPIO4 IICSDA_CAM	I/O	I2C bus serial data	20	SDIN	I/O
2-4-6	GND		Ground	21	PS1	I
32	GPIO8 PD(0)	O	Camera power type selector	22	PS2	I
2-4-6	GND		Ground	23	SHIELD	-
			Flash Enable	24	LED_CTRL	O

* Filter the AVDD28.

** Use a Buffer between module clk out, MON1_CAM and camera clk in, CLK_IN.

*** Non-connected.

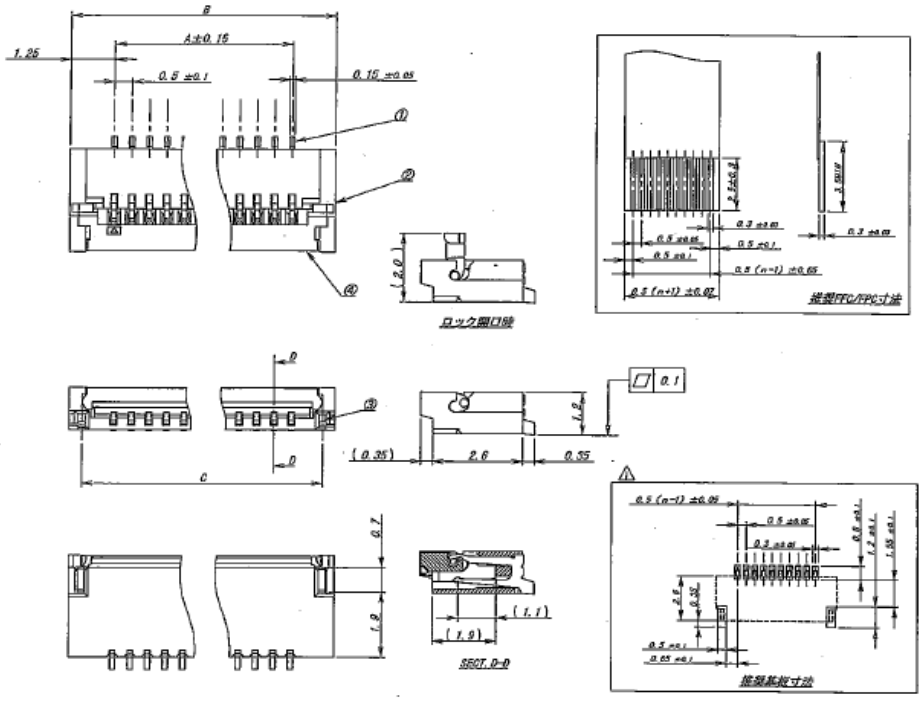

極数 OKT	部品番号 PART No.	A	B	C	EDP No.
5	9636S-05A-TC	2.0	4.5	3.8	
6	9636S-06A-TC	2.5	5.0	4.3	
7	9636S-07A-TC	3.0	5.5	4.8	
8	9636S-08A-TC	3.5	6.0	5.3	
9	9636S-09A-TC	4.0	6.5	5.8	
10	9636S-10A-TC	4.5	7.0	6.3	
11	9636S-11A-TC	5.0	7.5	6.8	
12	9636S-12A-TC	5.5	8.0	7.3	
13	9636S-13A-TC	6.0	8.5	7.8	
14	9636S-14A-TC	6.5	9.0	8.3	
15	9636S-15A-TC	7.0	9.5	8.8	
16	9636S-16A-TC	7.5	10.0	9.3	
17	9636S-17A-TC	8.0	10.5	9.8	
18	9636S-18A-TC	8.5	11.0	10.3	
19	9636S-19A-TC	9.0	11.5	10.8	
20	9636S-20A-TC	9.5	12.0	11.3	
21	9636S-21A-TC	10.0	12.5	11.8	
22	9636S-22A-TC	10.5	13.0	12.3	
23	9636S-23A-TC	11.0	13.5	12.8	
24	9636S-24A-TC	11.5	14.0	13.3	
25	9636S-25A-TC	12.0	14.5	13.8	
26	9636S-26A-TC	12.5	15.0	14.3	
27	9636S-27A-TC	13.0	15.5	14.8	
28	9636S-28A-TC	13.5	16.0	15.3	
29	9636S-29A-TC	14.0	16.5	15.8	
30	9636S-30A-TC	14.5	17.0	16.3	

Camera Socket Connector

8.2.2EVB for Agilent and Transchip camera support

In order to interface the Telit GM862 with a CMOS camera, Telit has developed an evaluation board. The EVK allow connecting all Telit modules through 2 connectors of 40 pins each.

The I2CBUS DUAL CAMERA board is plugged in the 2 connectors of 30 pins each on the module board.

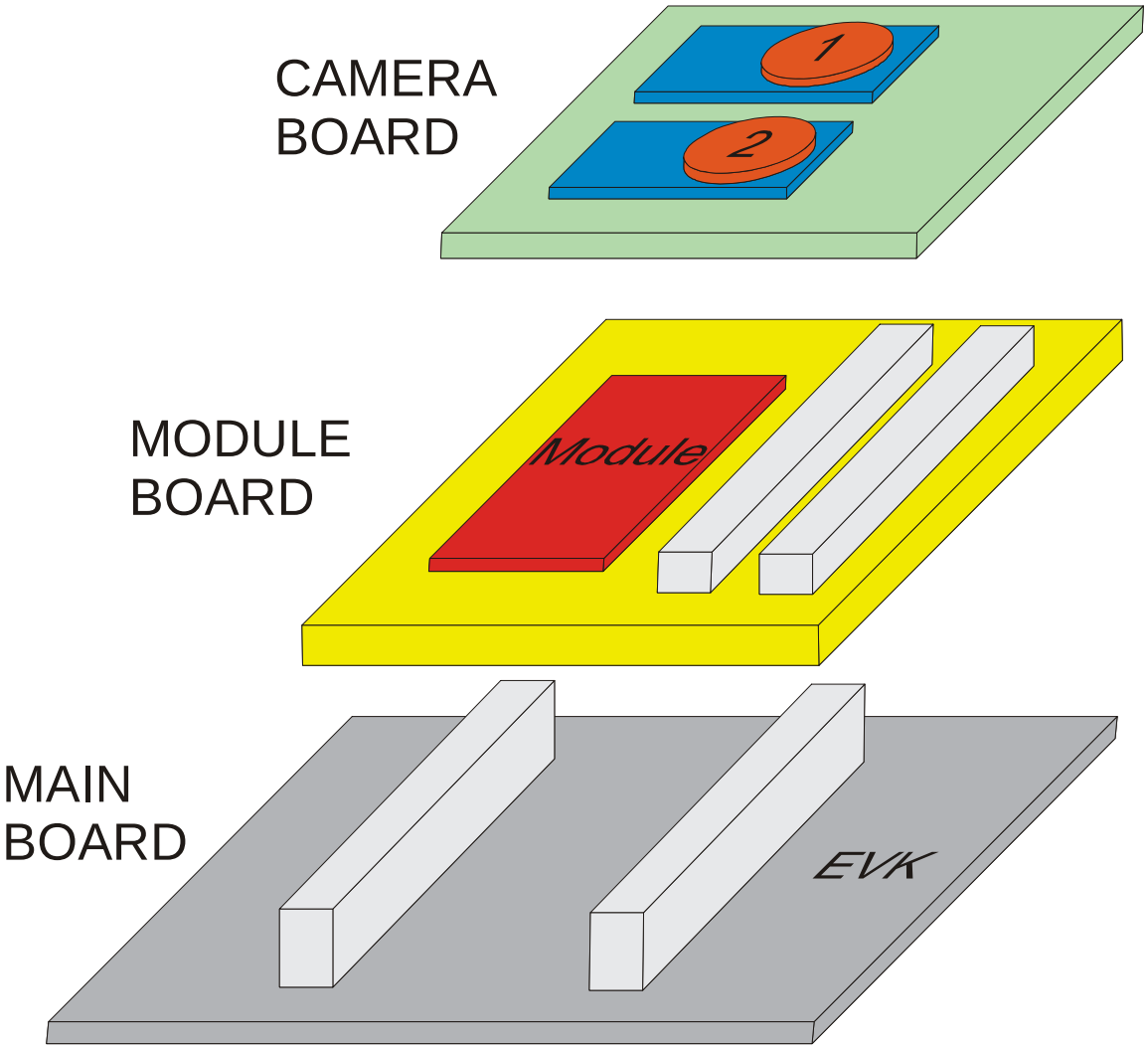

Reproduction forbidden without DAI Telecom written authorization – All Right reserved – Right of modification reserved

8.2.3Block Diagram for supported cameras

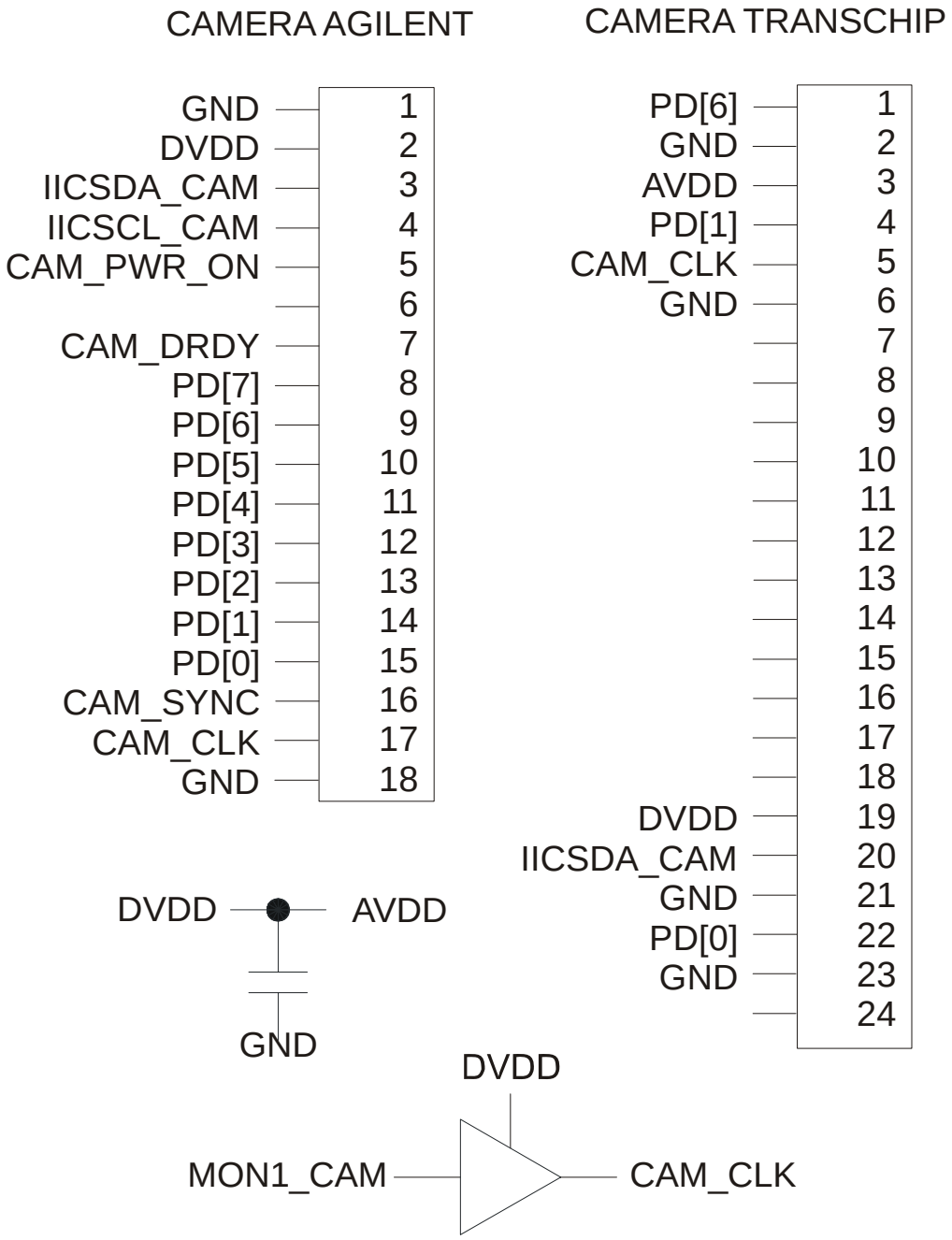

The numbers on the left side of the Camera's connectors refers to Module Connector's pin number. DVDD is an external power supply of 2.8V, controlled or gated by pin CAM_PWR_ON.

Reproduction forbidden without DAI Telecom written authorization – All Right reserved – Right of modification reserved

8.2.4 Schematic Diagrams for supported cameras

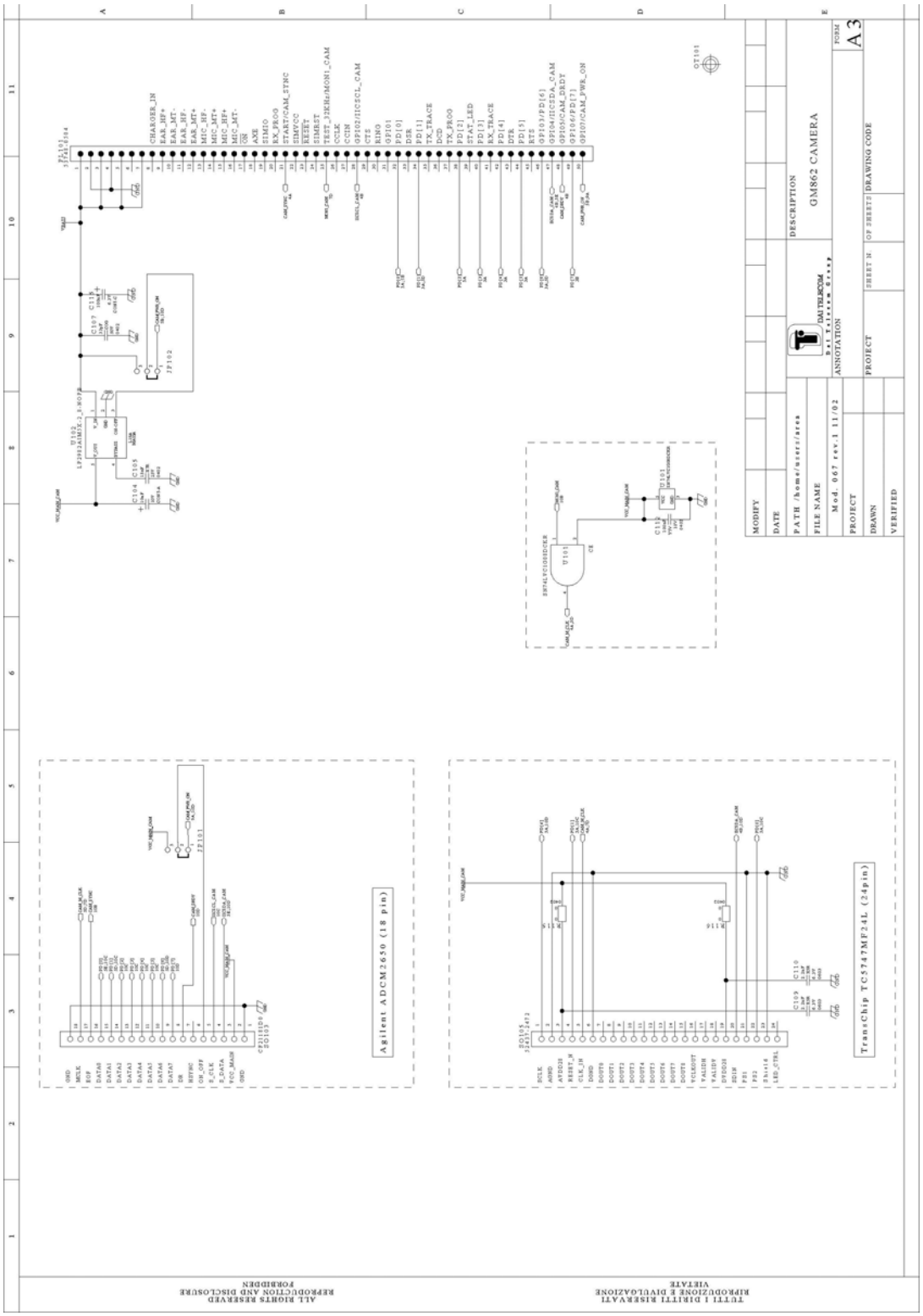

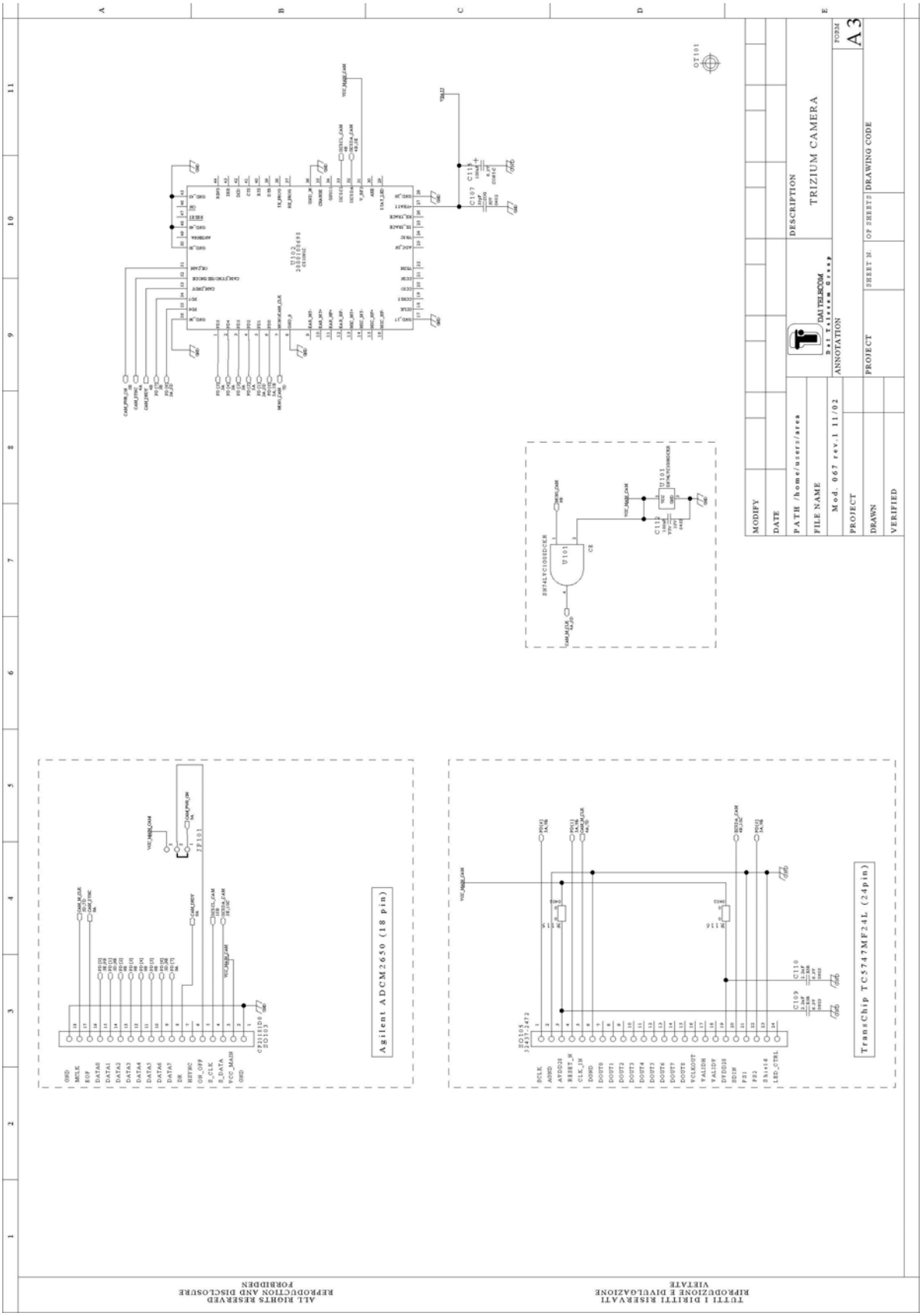
TRIZIUM CAMERA
Agilent ADCM2650 (18 pin)
TransChip TC5747MF24L (24pin)
ALL RIGHTS RESERVED
REPRODUCTION AND DISCLOSURE
FORBIDDEN
TUTTI I DIRITTI RISERVATI
RIPRODUZIONE E DIVULGAZIONE
VIETATE

8.2.5Example usage script for camera

Camera setting: (shown here are the defaults ones)

>AT#CAMSEL=0	(camera selection: 0-auto, 1-agilent, 2-transchip)
OK	
>AT#CMODE=0	(camera mode: 0-day, 1-night)
OK	
>AT#CAMQUA=0	(camera quality: 0-low, 1-medieum, 2-high)
OK	
>AT#CAMRES=0	(camera resolution: 0-VGA, 1-QVGA, 2-QQVGA)
OK	
>AT#CAMCOL=0*	(camera color: 0-color, 1-grayscale)
OK	
>AT#CAMZOOM=0	(camera zoom: 0-x1, 1-x2, 2-x4)
OK	
>AT#CAMTXT=0*	(camera timestamp: 0-no, 1-time only, 2-data only, 3-time&data)
OK	

Taking an reading a photo:

>AT#CAMEN=1	(camera ON)
OK	
>AT#TPHOTO	(take photo)
OK	
>AT+OBJL?	(see photo dimension)
#OBJL: Snapshot,38900	(where *38900* is the file dimension in bytes of the photo taken)
OK	
>AT#RPHOTO	(download the photo)
…data…..	(where *…data…* Correspond to the photo data in binary)
OK	
>AT#TPHOTO	Repeating photo capture and download n times
OK	
>AT#RPHOTO	
…data…..	
OK	
>AT#CAMEN=O	(camera OFF)

*only Transchip camera

Reproduction forbidden without DAI Telecom written authorization – All Right reserved – Right of modification reserved

9 Document Change Log

Revision	Date	Changes

Reproduction forbidden without DAI Telecom written authorization – All Right reserved – Right of modification reserved

10 Annex A - EVK schematics

Reproduction forbidden without DAI Telecom written authorization – All Right reserved – Right of modification reserved

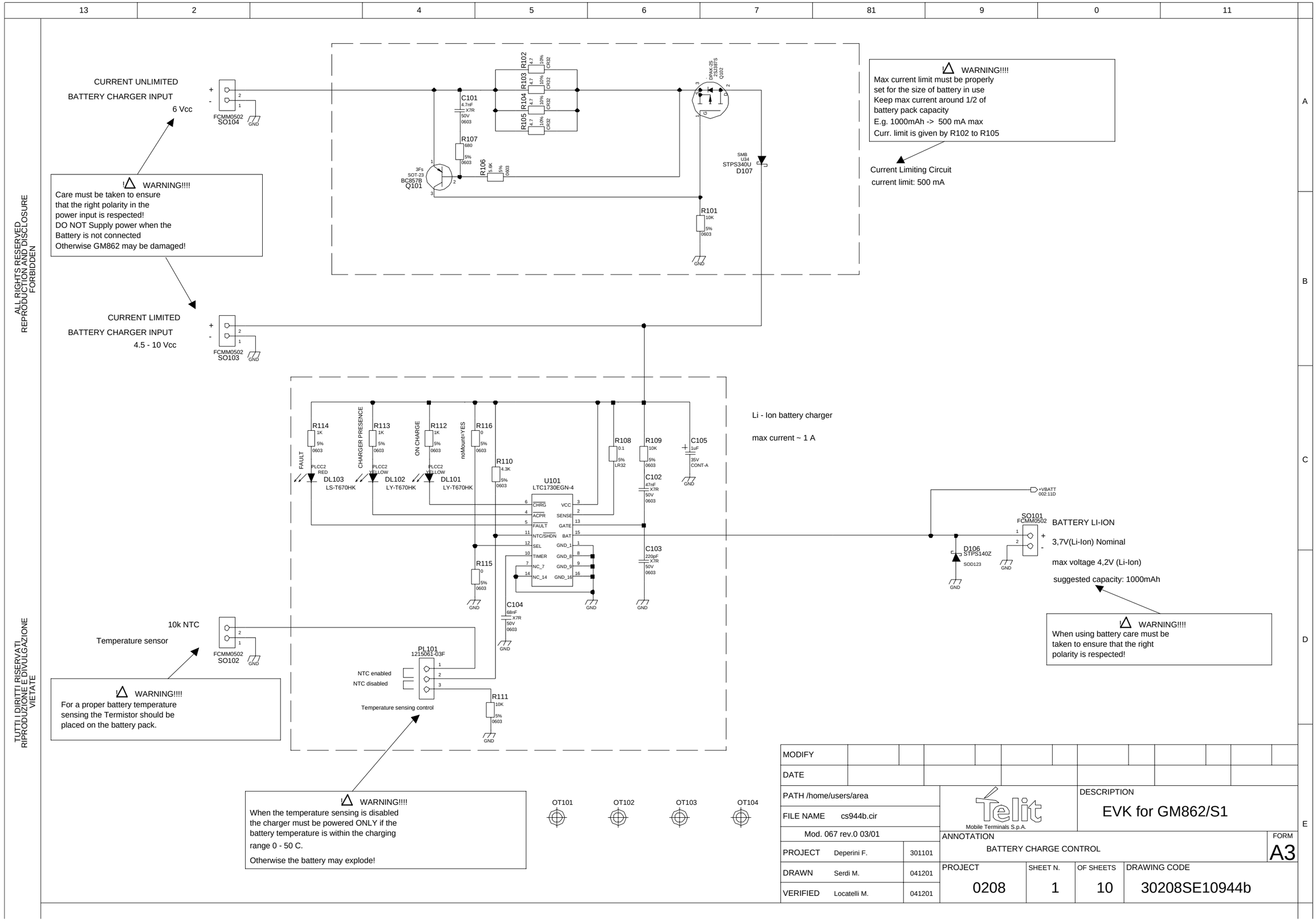

MODIFY			
DATE			
PATH /home/users/area		Telit Mobile Terminals S.p.A.	DESCRIPTION: EVK for GM862/S1
FILE NAME cs944b.cir			
Mod. 067 rev.0 03/01		ANNOTATION: BATTERY CHARGE CONTROL	FORM: A3
PROJECT Deperini F.	301101		
DRAWN Serdi M.	041201	PROJECT: 0208 / SHEET N.: 1 / OF SHEETS: 10	DRAWING CODE: 30208SE10944b
VERIFIED Locatelli M.	041201		

ALL RIGHTS RESERVED
REPRODUCTION AND DISCLOSURE
FORBIDDEN

TUTTI I DIRITTI RISERVATI
RIPRODUZIONE E DIVULGAZIONE
VIETATE

ALL RIGHTS RESERVED
REPRODUCTION AND DISCLOSURE
FORBIDDEN

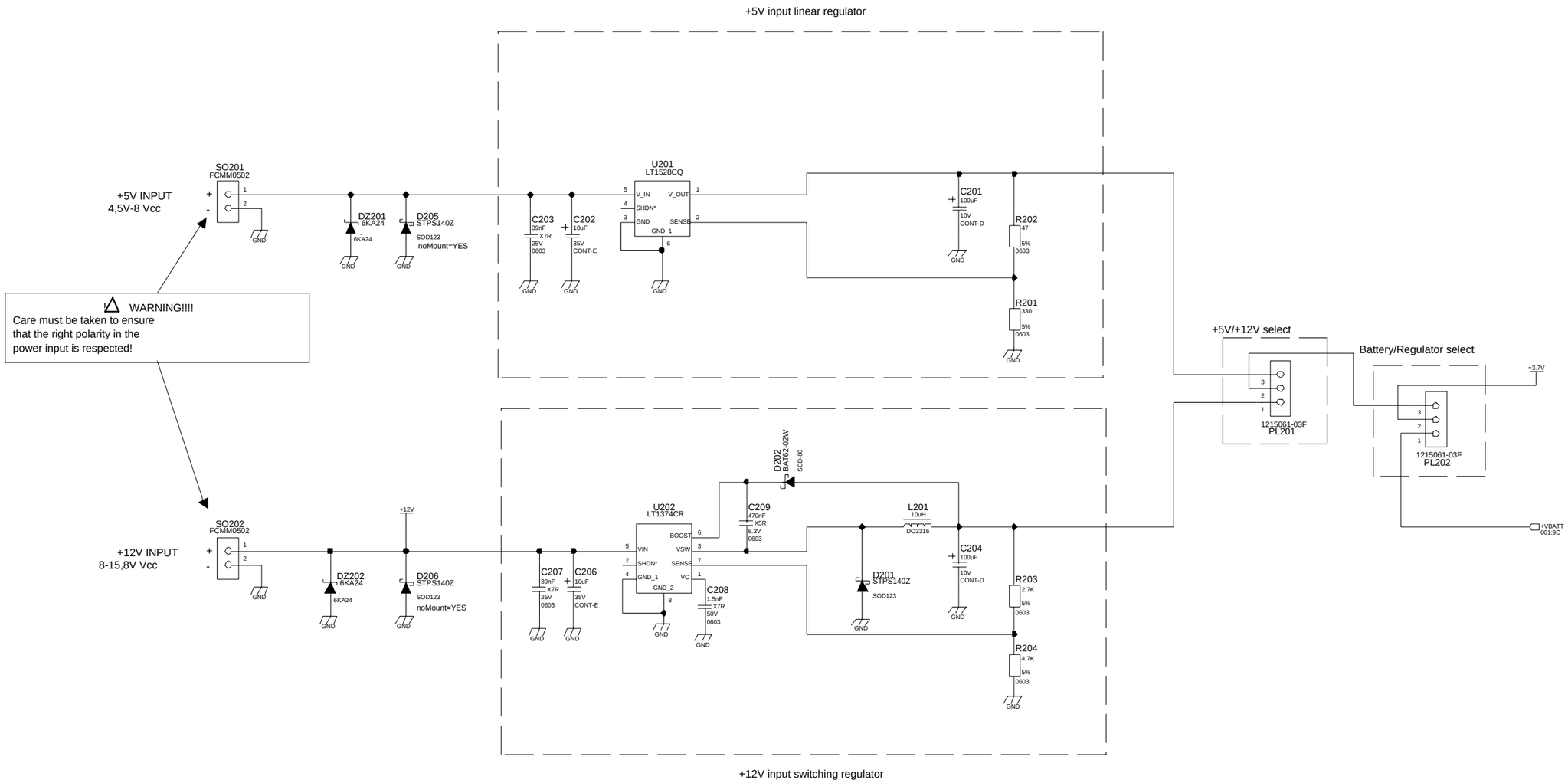

TUTTI I DIRITTI RISERVATI
RIPRODUZIONE E DIVULGAZIONE
VIETATE

MODIFY			
DATE			
PATH /home/users/area			
FILE NAME	cs944b.cir		
Mod. 067 rev.0 03/01			
PROJECT	Deperini F.	301101	
DRAWN	Serdi M.	041201	
VERIFIED	Locatelli M.	041201	

Telit Mobile Terminals S.p.A.

DESCRIPTION: EVK for GM862/S1

ANNOTATION: +5V/+12V INPUT POWER REGULATORS

FORM: A3

PROJECT	SHEET N.	OF SHEETS	DRAWING CODE
0208	2	10	30208SE10944b

ALL RIGHTS RESERVED
REPRODUCTION AND DISCLOSURE
FORBIDDEN

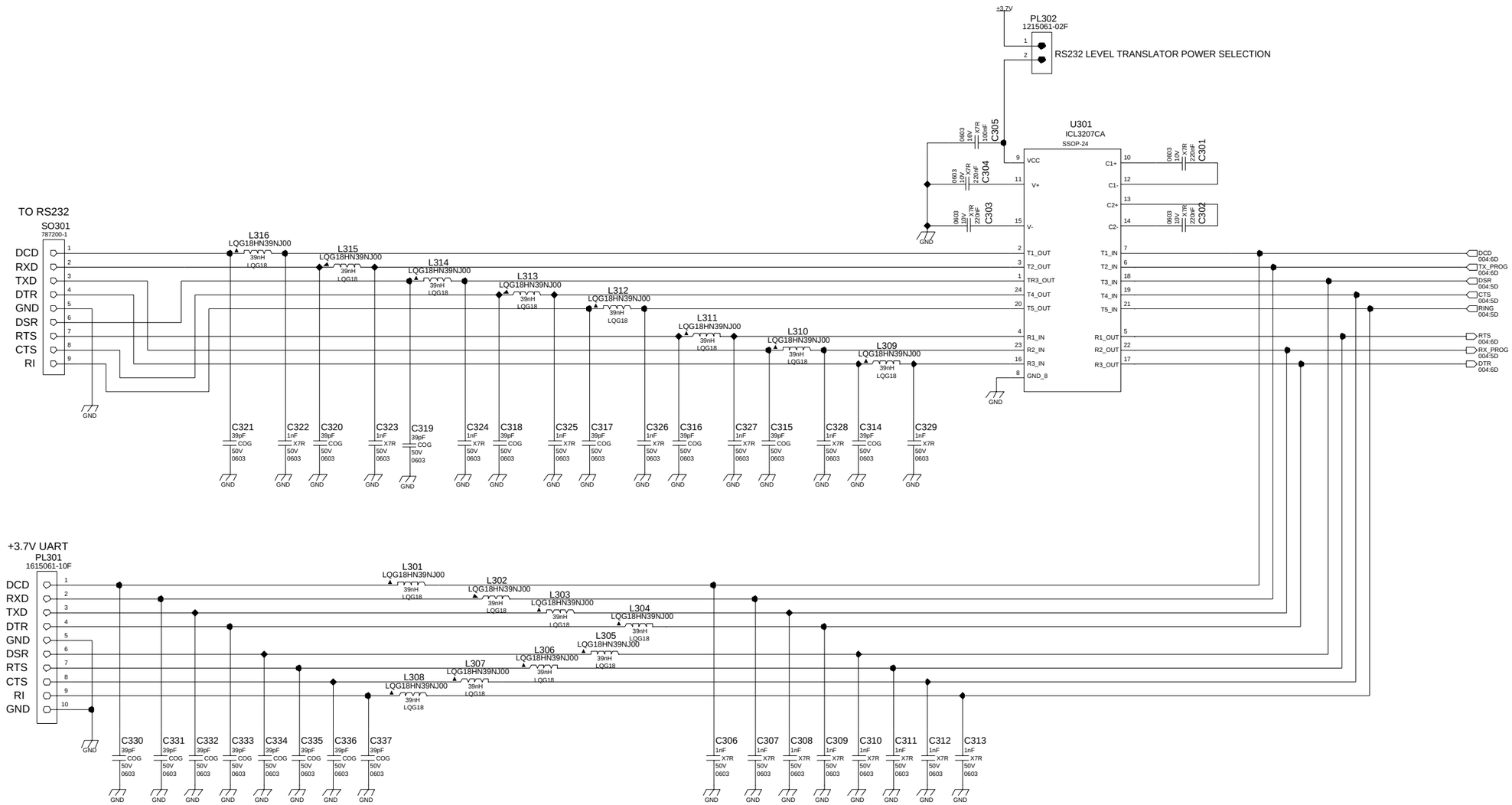

TUTTI I DIRITTI RISERVATI
RIPRODUZIONE E DIVULGAZIONE
VIETATE

MODIFY			
DATE			
PATH /home/users/area		Telit Mobile Terminals S.p.A.	DESCRIPTION: EVK for GM862/S1
FILE NAME cs944b.cir			
Mod. 067 rev.0 03/01		ANNOTATION: RS232 LEVEL TRANSLATOR AND UART INPUT/OUTPUT	FORM: A3
PROJECT Deperini F.	301101		
DRAWN Serdi M.	041201	PROJECT: 0208 / SHEET N.: 31 / OF SHEETS: 0	DRAWING CODE: 30208SE10944b
VERIFIED Locatelli M.	041201		

Reproduction forbidden without DAI Telecom written authorization – All Right reserved – Right of modification reserved

ALL RIGHTS RESERVED
REPRODUCTION AND DISCLOSURE
FORBIDDEN

TUTTI I DIRITTI RISERVATI
RIPRODUZIONE E DIVULGAZIONE
VIETATE

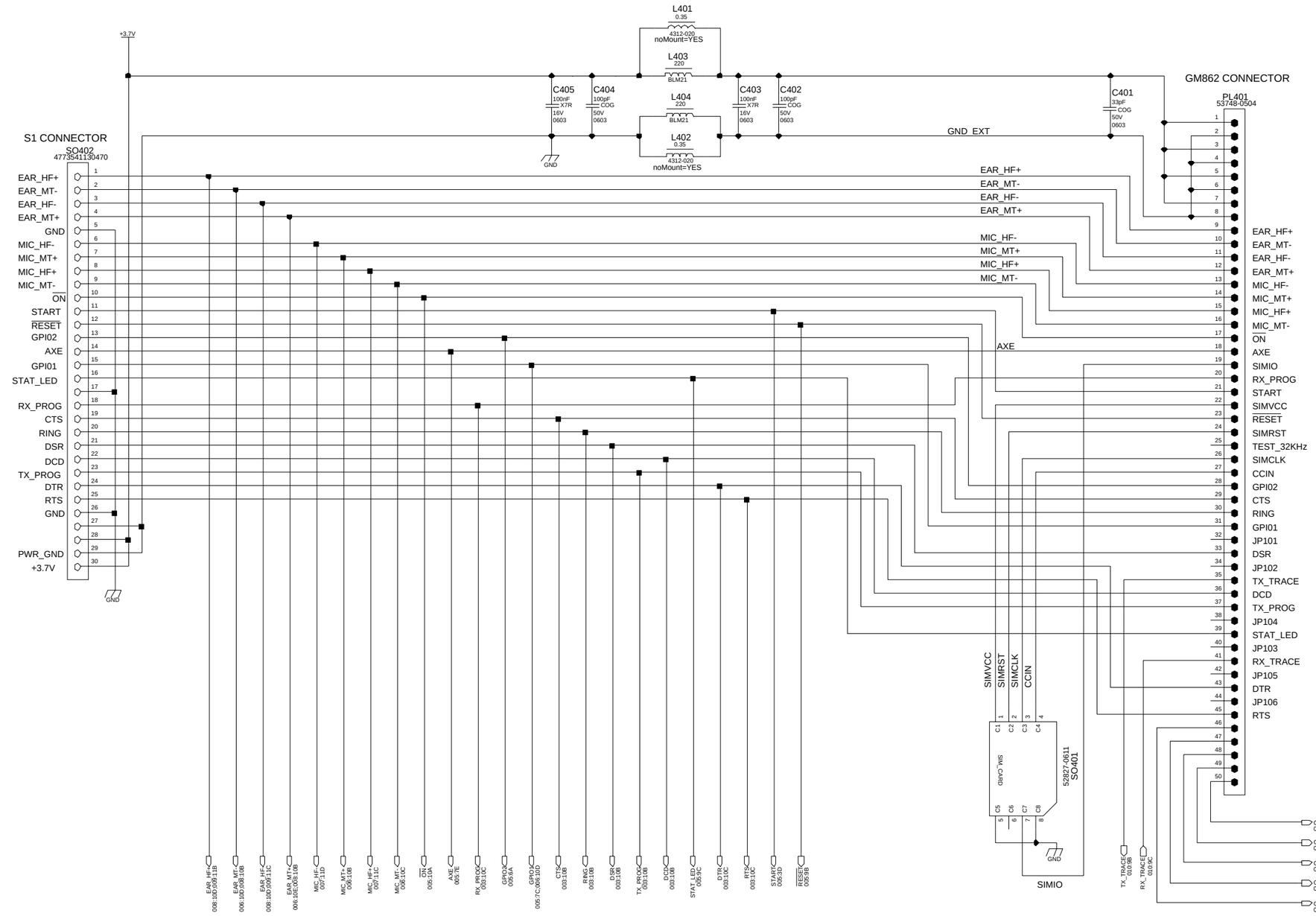

MODIFY											
DATE											

PATH /home/users/area	Telit Mobile Terminals S.p.A.		DESCRIPTION	
FILE NAME cs944b.cir			EVK for GM862/S1	
Mod. 067 rev.0 03/01	ANNOTATION GM862 & S1 CONNECTORS			FORM A3
PROJECT Deperini F. 301101	PROJECT	SHEET N.	OF SHEETS	DRAWING CODE
DRAWN Serdi M. 041201	0208	4	10	30208SE10944b
VERIFIED Locatelli M. 041201				

Reproduction forbidden without DAI Telecom written authorization – All Right reserved – Right of modification reserved

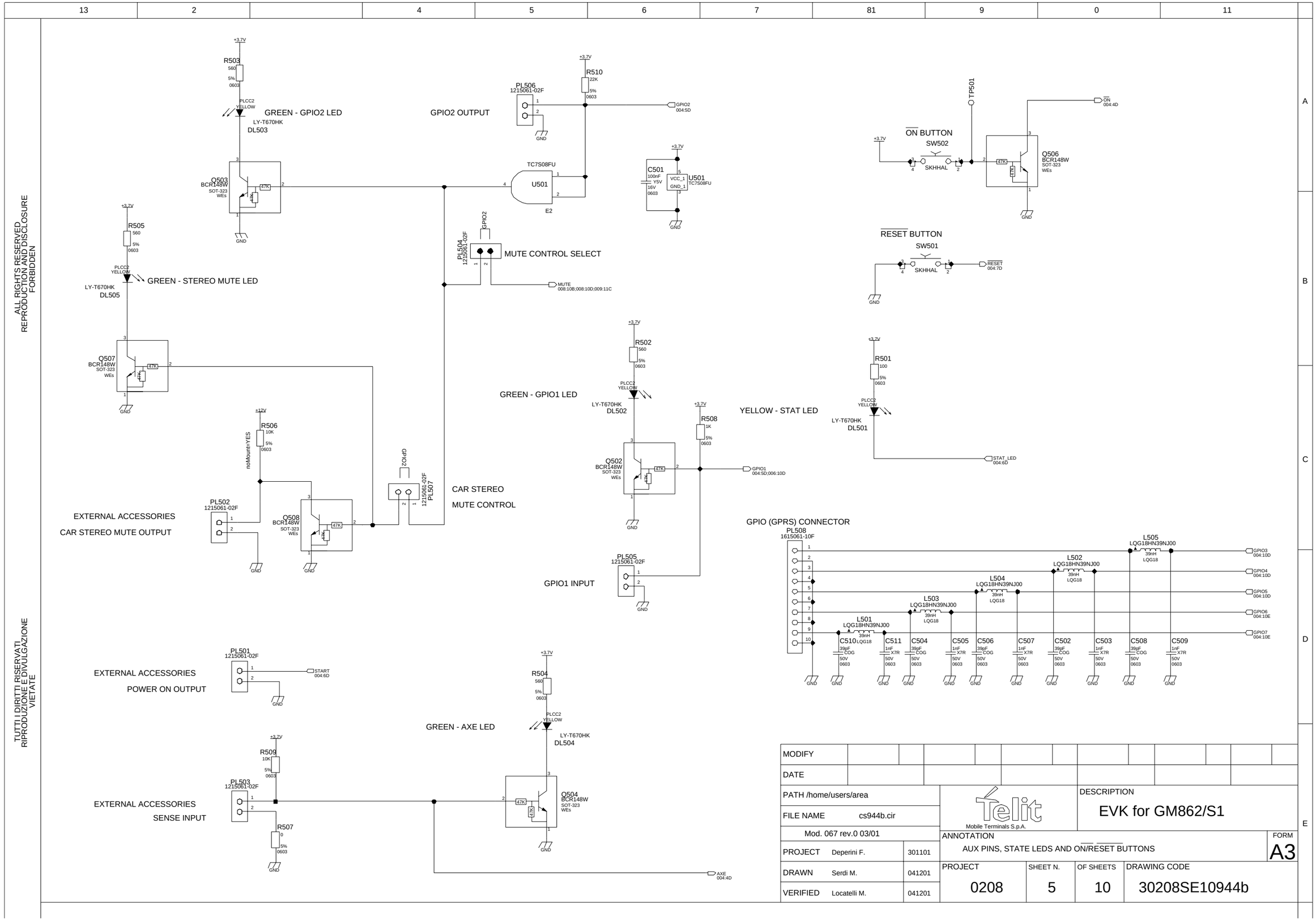
GREEN - GPIO2 LED
GPIO2 OUTPUT
ON BUTTON
RESET BUTTON
MUTE CONTROL SELECT
GREEN - STEREO MUTE LED
GREEN - GPIO1 LED
YELLOW - STAT LED
CAR STEREO
MUTE CONTROL
EXTERNAL ACCESSORIES
CAR STEREO MUTE OUTPUT
GPIO (GPRS) CONNECTOR
GPIO1 INPUT
EXTERNAL ACCESSORIES
POWER ON OUTPUT
GREEN - AXE LED
EXTERNAL ACCESSORIES
SENSE INPUT
ALL RIGHTS RESERVED
REPRODUCTION AND DISCLOSURE
FORBIDDEN
TUTTI I DIRITTI RISERVATI
RIPRODUZIONE E DIVULGAZIONE
VIETATE
MODIFY
DATE
PATH /home/users/area
FILE NAME cs944b.cir
Mod. 067 rev.0 03/01
PROJECT Deperini F. 301101
DRAWN Serdi M. 041201
VERIFIED Locatelli M. 041201
Telit
Mobile Terminals S.p.A.
DESCRIPTION
EVK for GM862/S1
ANNOTATION
AUX PINS, STATE LEDS AND ON/RESET BUTTONS
FORM
A3
PROJECT 0208
SHEET N. 5
OF SHEETS 10
DRAWING CODE 30208SE10944b

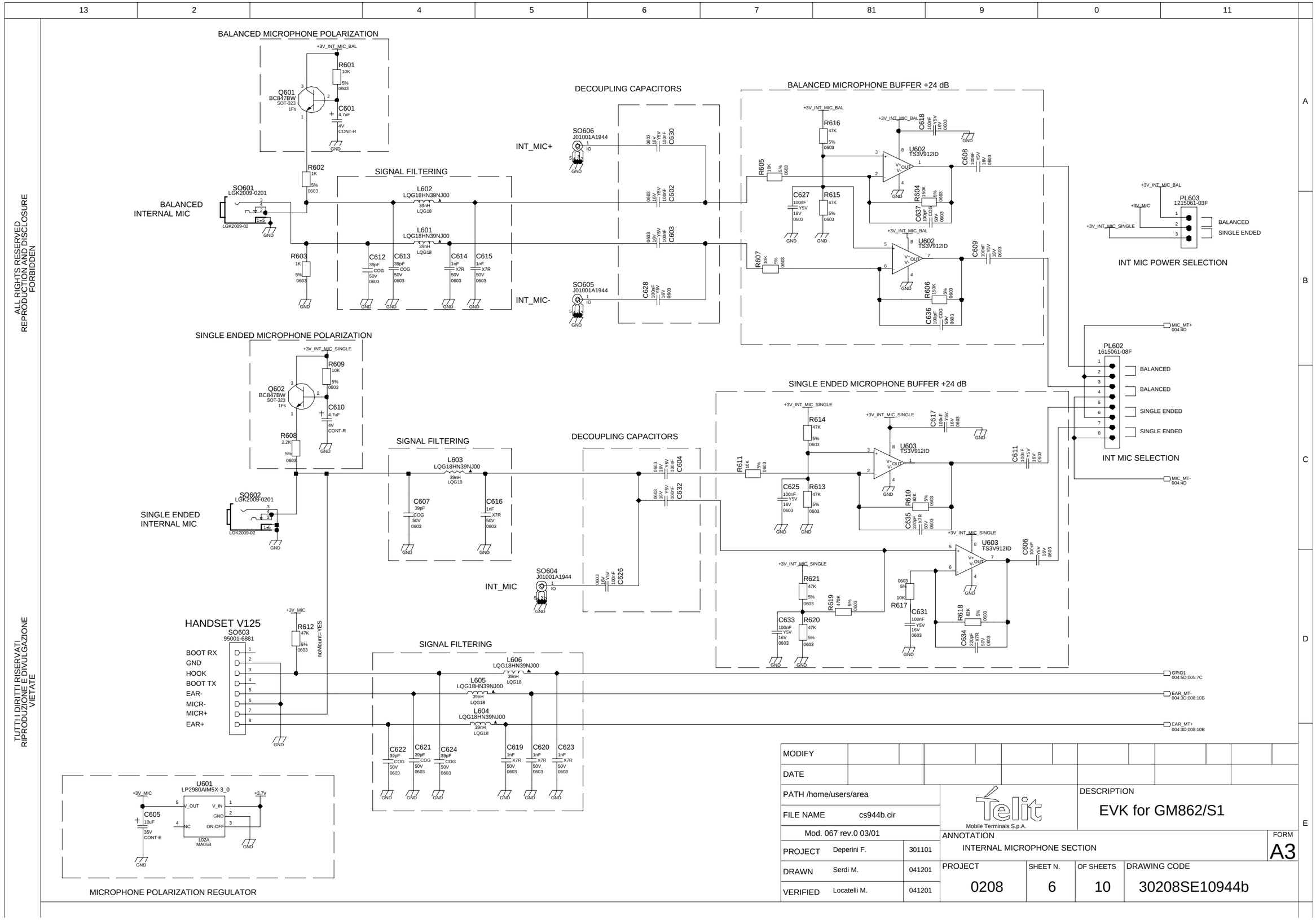

MODIFY											
DATE											
PATH /home/users/area			Telit Mobile Terminals S.p.A.				DESCRIPTION EVK for GM862/S1				
FILE NAME	cs944b.cir										
Mod. 067 rev.0 03/01			ANNOTATION INTERNAL MICROPHONE SECTION								FORM A3
PROJECT	Deperini F.	301101	PROJECT 0208		SHEET N. 6		OF SHEETS 10		DRAWING CODE 30208SE10944b		
DRAWN	Serdi M.	041201									
VERIFIED	Locatelli M.	041201									

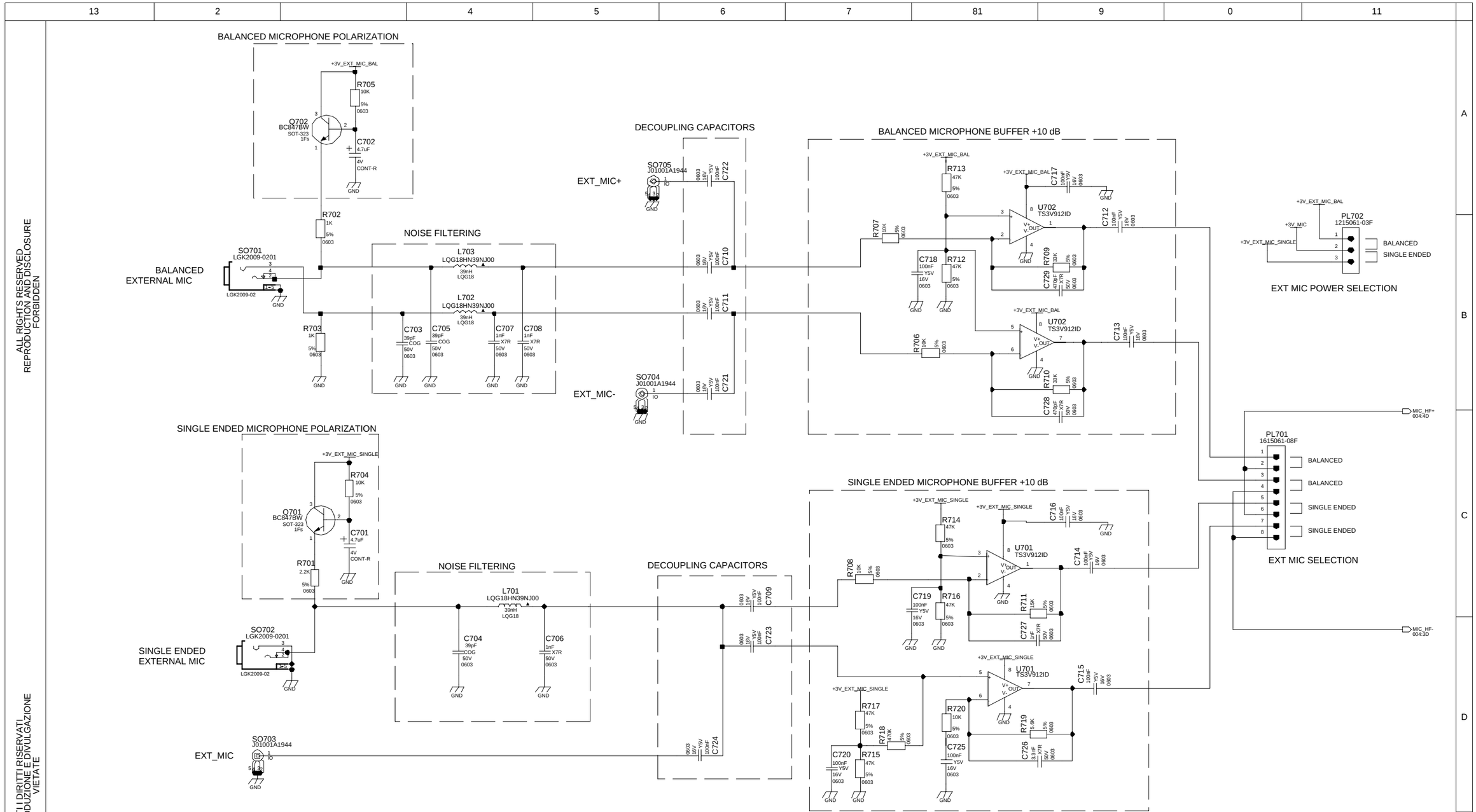

MODIFY											
DATE											
PATH /home/users/area			Telit Mobile Terminals S.p.A.			DESCRIPTION					
FILE NAME	cs944b.cir					EVK for GM862/S1					
Mod. 067 rev.0 03/01			ANNOTATION								FORM
PROJECT	Deperini F.	301101	EXTERNAL MICROPHONE SECTION								A3
DRAWN	Serdi M.	041201	PROJECT	SHEET N.	OF SHEETS	DRAWING CODE					
VERIFIED	Locatelli M.	041201	0208	71	0	30208SE10944b					

ALL RIGHTS RESERVED
REPRODUCTION AND DISCLOSURE
FORBIDDEN

TUTTI I DIRITTI RISERVATI
RIPRODUZIONE E DIVULGAZIONE
VIETATE

ALL RIGHTS RESERVED
REPRODUCTION AND DISCLOSURE
FORBIDDEN

TUTTI I DIRITTI RISERVATI
RIPRODUZIONE E DIVULGAZIONE
VIETATE

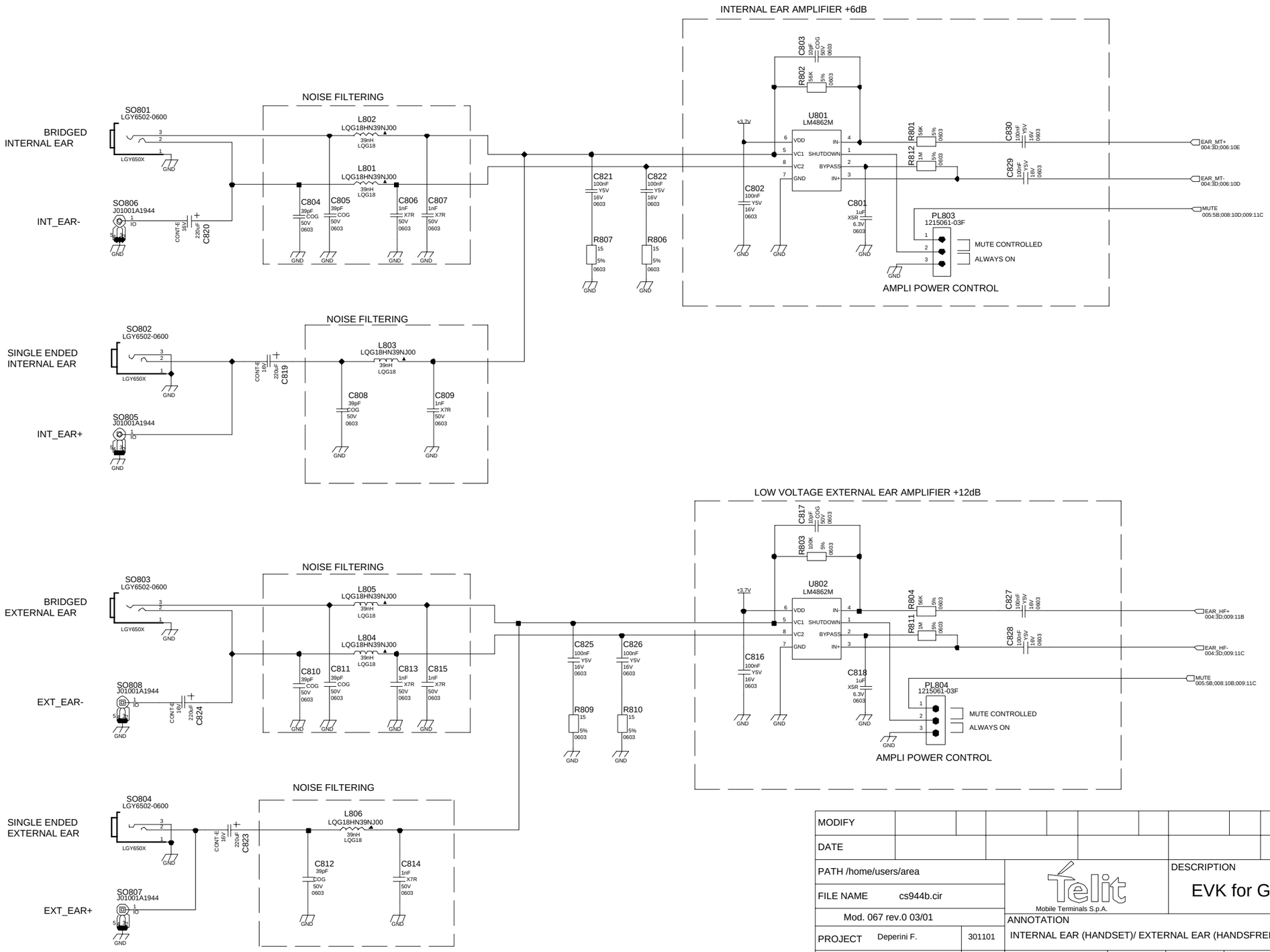

MODIFY			
DATE			
PATH /home/users/area			
FILE NAME	cs944b.cir		
Mod. 067 rev.0 03/01			
PROJECT	Deperini F.	301101	
DRAWN	Serdi M.	041201	
VERIFIED	Locatelli M.	041201	

Telit Mobile Terminals S.p.A.

DESCRIPTION: EVK for GM862/S1

ANNOTATION: INTERNAL EAR (HANDSET)/ EXTERNAL EAR (HANDSFREE)

FORM: A3

PROJECT	SHEET N.	OF SHEETS	DRAWING CODE
0208	81	0	30208SE10944b

Reproduction forbidden without DAI Telecom written authorization – All Right reserved – Right of modification reserved

ALL RIGHTS RESERVED
REPRODUCTION AND DISCLOSURE
FORBIDDEN

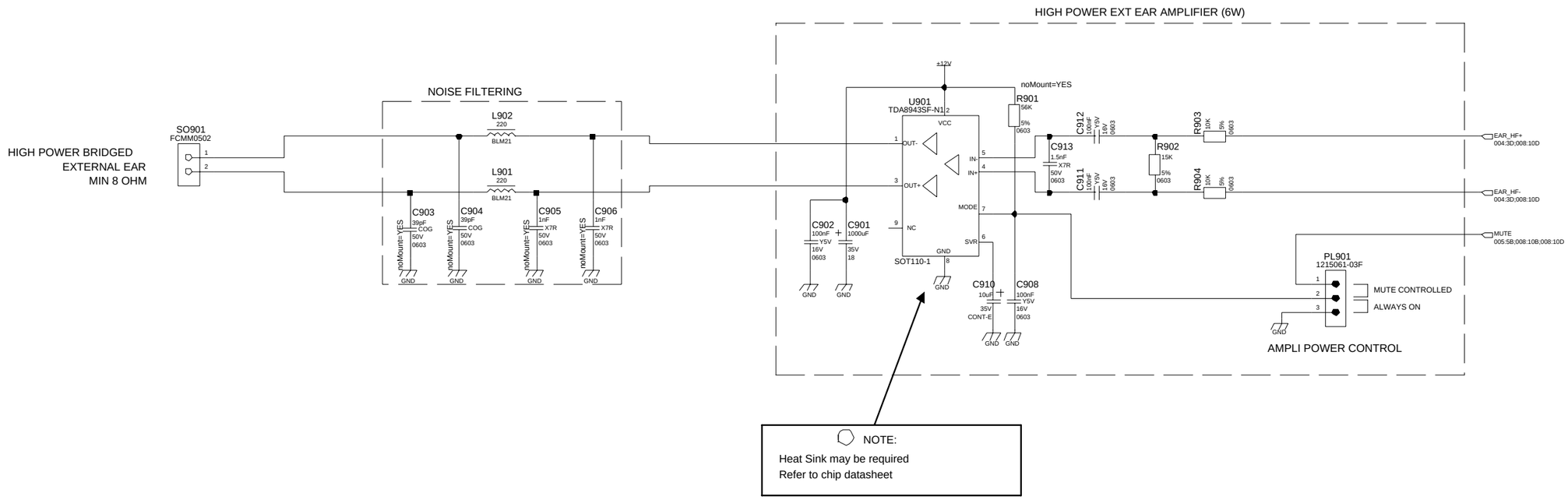

TUTTI I DIRITTI RISERVATI
RIPRODUZIONE E DIVULGAZIONE
VIETATE

MODIFY					
DATE					
PATH /home/users/area			Telit Mobile Terminals S.p.A.	DESCRIPTION	
FILE NAME	cs944b.cir			EVK for GM862/S1	
Mod. 067 rev.0 03/01			ANNOTATION		FORM
PROJECT	Deperini F.	301101	HIGH POWER EXTERNAL EAR (HANDSFREE)		A3
DRAWN	Serdi M.	041201	PROJECT	SHEET N. / OF SHEETS	DRAWING CODE
VERIFIED	Locatelli M.	041201	0208	9 / 10	30208SE10944b

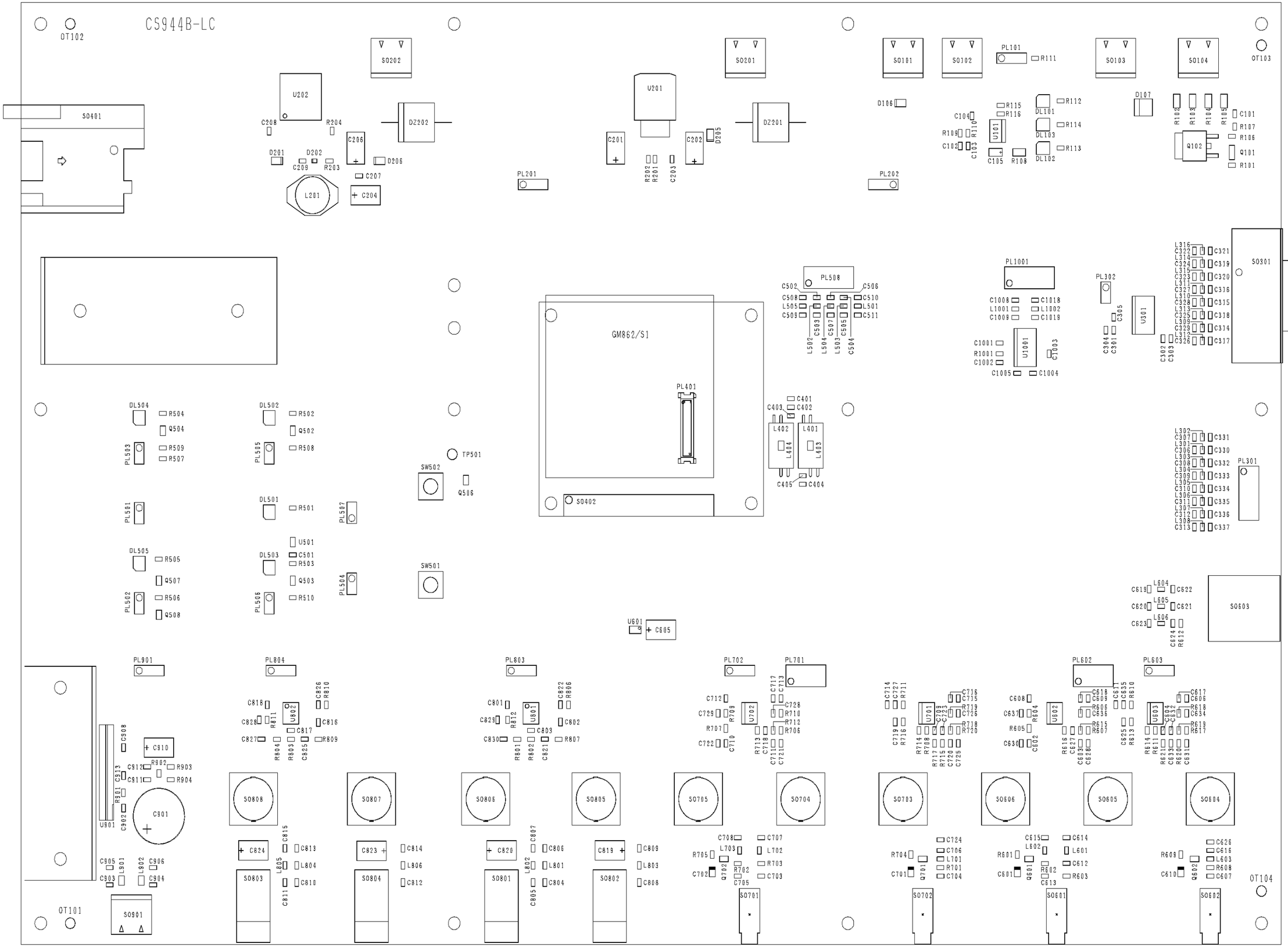

Reproduction forbidden without DAI Telecom written authorization – All Right reserved – Right of modification reserved

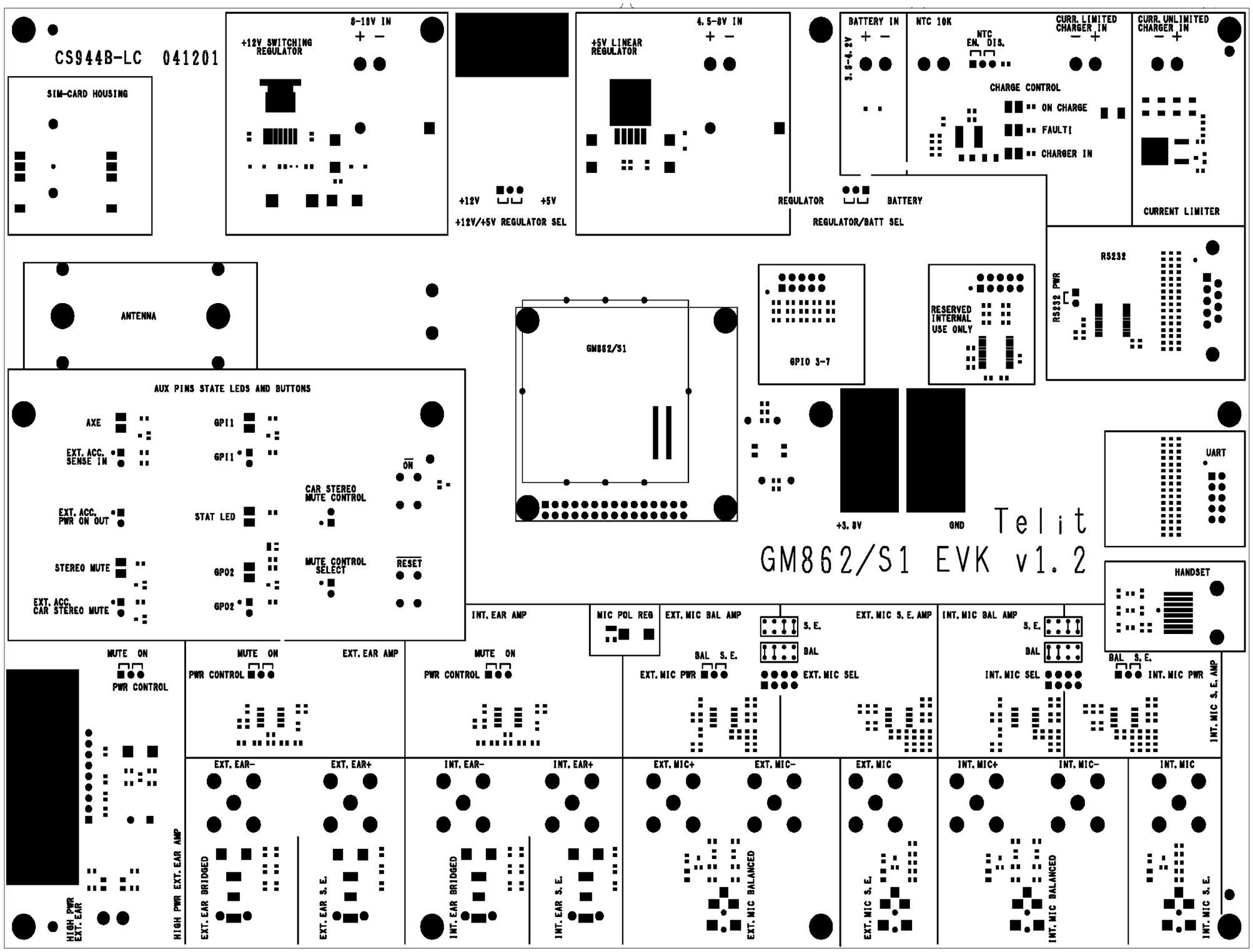
CS944B-LC 041201
SIM-CARD HOUSING
+12V SWITCHING REGULATOR
8-18V IN
+12V
+5V
+12V/+5V REGULATOR SEL
+5V LINEAR REGULATOR
4.5-8V IN
BATTERY IN
3.6-4.2V
NTC 10K
NTC EN. DIS.
CURR. LIMITED CHARGER IN
CURR. UNLIMITED CHARGER IN
CHARGE CONTROL
ON CHARGE
FAULT!
CHARGER IN
CURRENT LIMITER
REGULATOR
BATTERY
REGULATOR/BATT SEL
RS232
RS232 PWR
ANTENNA
GM862/S1
GPIO 3-7
RESERVED INTERNAL USE ONLY
+3.8V
GND
Telit
GM862/S1 EVK v1.2
UART
HANDSET
AUX PINS STATE LEDS AND BUTTONS
AXE
GPI1
EXT. ACC. SENSE IN
GPI1
ON
CAR STEREO MUTE CONTROL
EXT. ACC. PWR ON OUT
STAT LED
STEREO MUTE
GPO2
MUTE CONTROL SELECT
RESET
EXT. ACC. CAR STEREO MUTE
GPO2
INT. EAR AMP
MIC POL REG
EXT. MIC BAL AMP
S. E.
BAL
EXT. MIC S. E. AMP
INT. MIC BAL AMP
S. E.
BAL
MUTE ON
PWR CONTROL
MUTE ON
PWR CONTROL
EXT. EAR AMP
MUTE ON
PWR CONTROL
BAL S. E.
EXT. MIC PWR
EXT. MIC SEL
INT. MIC SEL
BAL S. E.
INT. MIC PWR
INT. MIC S. E. AMP
EXT. EAR-
EXT. EAR+
INT. EAR-
INT. EAR+
EXT. MIC+
EXT. MIC-
EXT. MIC
INT. MIC+
INT. MIC-
INT. MIC
HIGH PWR EXT. EAR
HIGH PWR EXT. EAR AMP
EXT. EAR BRIDGED
EXT. EAR S. E.
INT. EAR BRIDGED
INT. EAR S. E.
EXT. MIC BALANCED
EXT. MIC S. E.
INT. MIC BALANCED
INT. MIC S. E.

11 Annex B - Camera EVB schematics

Reproduction forbidden without DAI Telecom written authorization – All Right reserved – Right of modification reserved

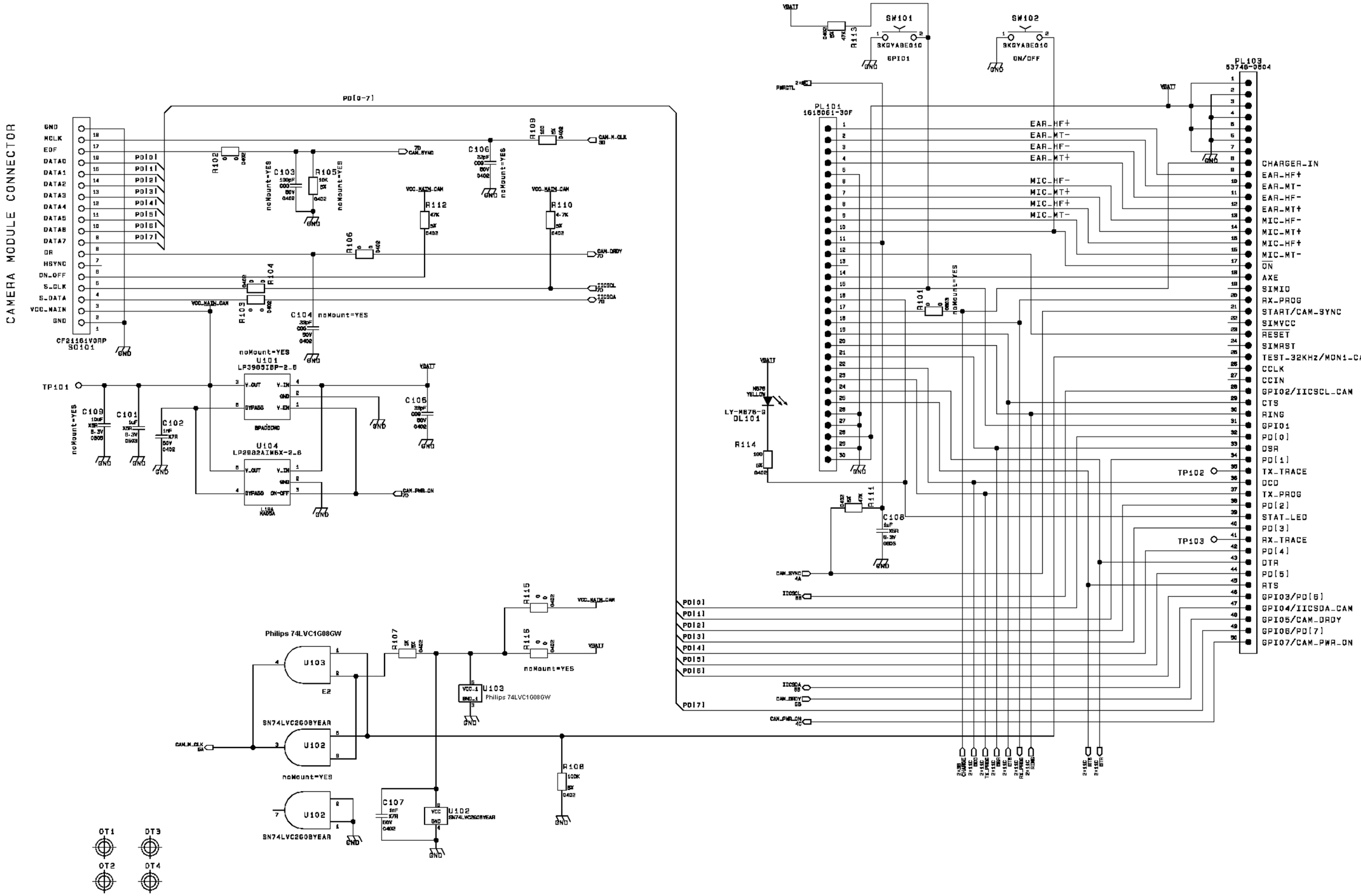
CAMERA MODULE CONNECTOR
GND
MCLK
EOF
DATA0
DATA1
DATA2
DATA3
DATA4
DATA5
DATA6
DATA7
OR
HSYNC
ON_OFF
S_CLK
S_DATA
VCC_MAIN
CF21161V0RP
SO101
PD[0-7]
CAM_SYNC
CAM_M_CLK
CAM_RDY
IICSCL
IICSDA
CAM_PWR_ON
VCC_MAIN_CAM
VBATT
TP101
U101
LP3985IBP-2.8
U104
LP2982AIM5X-2.8
Philips 74LVC1G08GW
U103
U102
SN74LVC2G08YEAR
noMount=YES
SW101
SKGYABE010
GPIO1
SW102
ON/OFF
PL101
1615061-30F
PL103
53748-0504
CHARGER_IN
EAR_HF+
EAR_MT-
EAR_HF-
EAR_MT+
MIC_HF-
MIC_MT+
MIC_HF+
MIC_MT-
ON
AXE
SIMIO
RX_PROG
START/CAM_SYNC
SIMVCC
RESET
SIMRST
TEST_32KHz/MON1_CAM
CCLK
CCIN
GPIO2/IICSCL_CAM
CTS
RING
GPIO1
PD[0]
DSR
PD[1]
TX_TRACE
DCD
TX_PROG
PD[2]
STAT_LED
PD[3]
RX_TRACE
PD[4]
DTR
PD[5]
RTS
GPIO3/PD[6]
GPIO4/IICSDA_CAM
GPIO5/CAM_RDY
GPIO6/PD[7]
GPIO7/CAM_PWR_ON
TP102
TP103
LY-M676-B
DL101
OT1
OT2
OT3
OT4

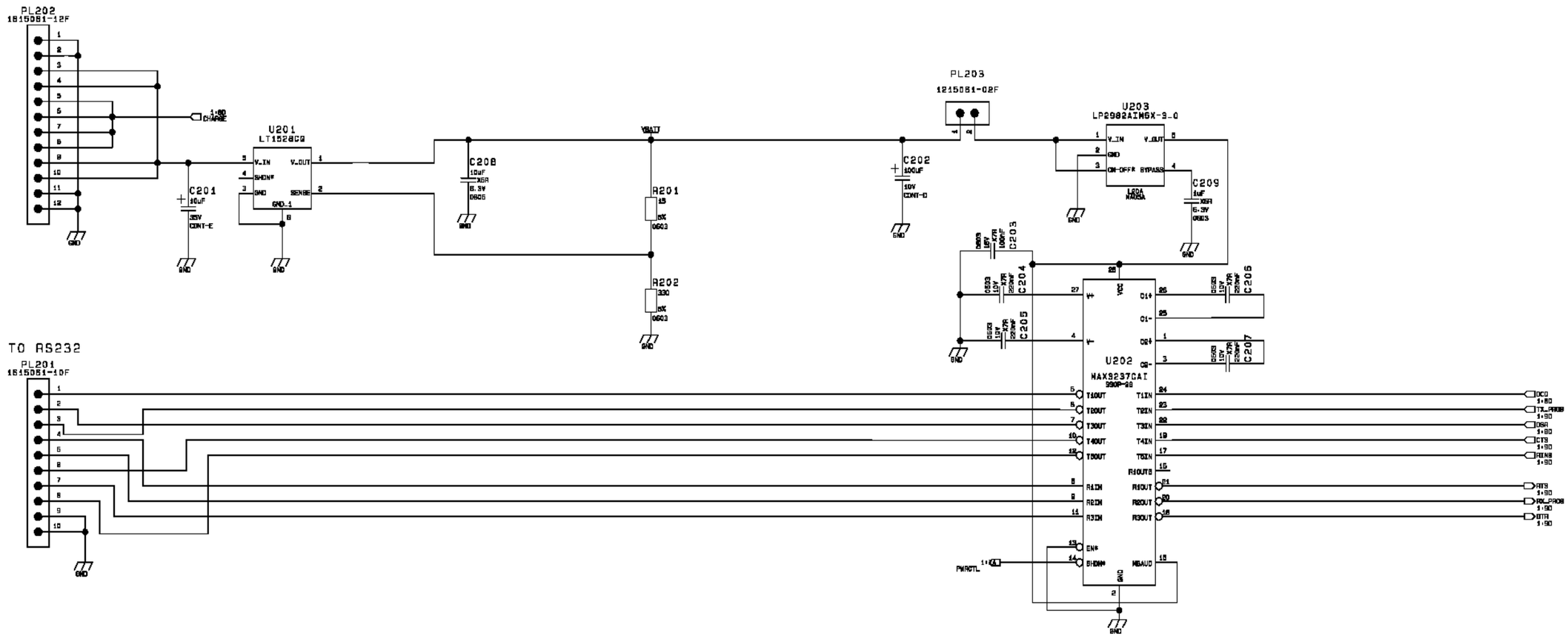
PL202
1815051-12F
CHARGE
U201
LT1528CQ
C201
10uF
C208
10uF
VBATT
R201
15
R202
330
PL203
1215051-02F
C202
100UF
U203
LP2982AIM5X-3.0
C209
1uF
C203
C204
C205
C207
U202
MAX3237CAI
SSOP-28
TO RS232
PL201
1815051-10F
PWRCTL
RS232 LEVEL TRANSLATOR

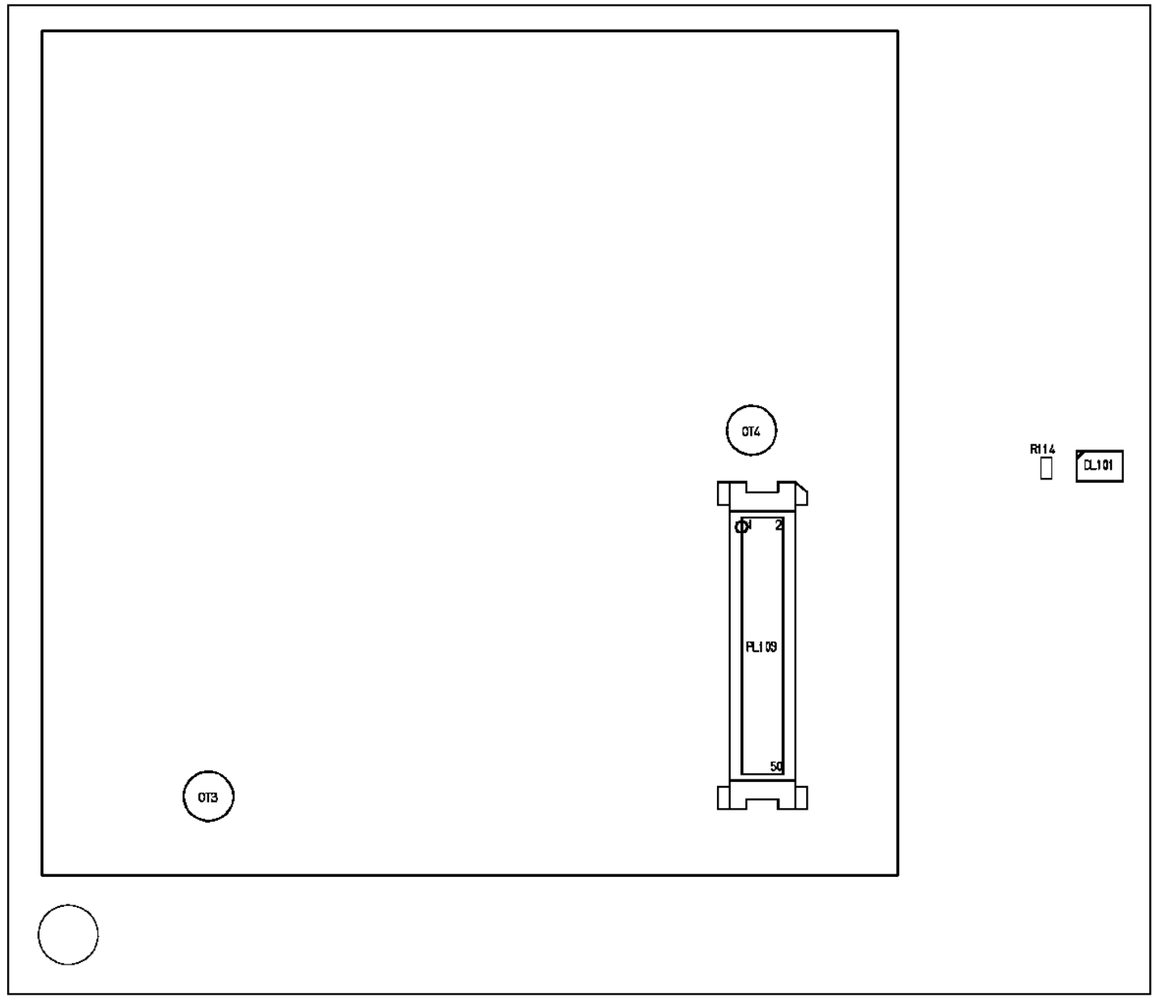

Reproduction forbidden without DAI Telecom written authorization – All Right reserved – Right of modification reserved

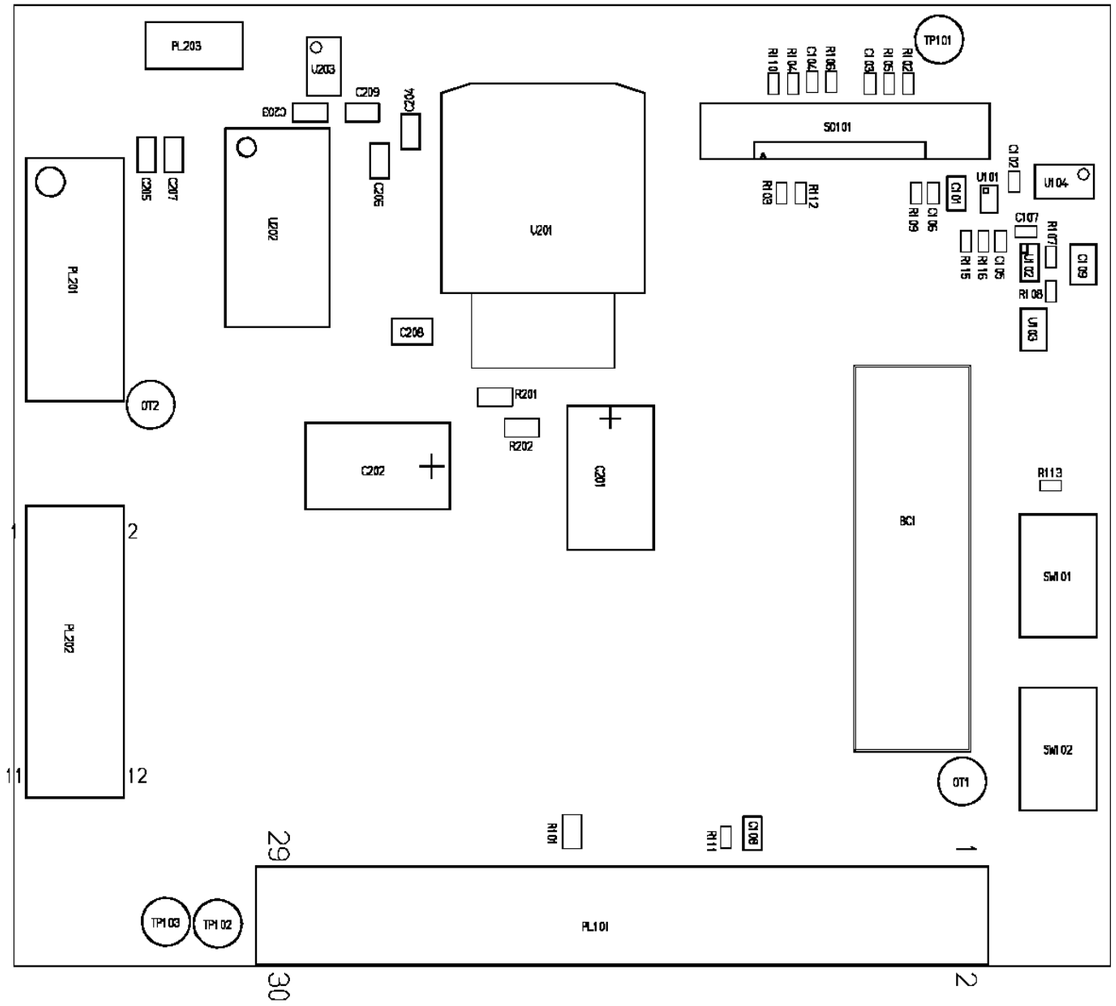
PL203
U203
C209
C204
C203
C205
C207
U202
PL201
C206
V201
OT2
C208
R201
R202
C202
C201
2
1
PL202
12
11
TP101
R110
R104
C104
R106
C103
R105
R102
SO101
C102
U104
R103
R112
U101
C101
C105
R109
C107
R107
R114
C106
R115
R116
C108
R108
U103
BC1
R113
SW101
SW102
OT1
29
R101
R111
C109
1
TP103
TP102
PL101
30
2