Artwork

ARTWORK SPECIFICATION
ESSENTIAL2 ROBIN FHD (2D barcode with 5x5)

REVISION: 09 2023-03-14

REVISION NOTES:
rev 05: added FHD
rev 07: Japan delayed
rev 09: 2D barcode to be etched with 5x5

SCALE:1:1 DESIGNER: [CP]

COLOR STANDARDS USED:

WHITE

laser etch Pantone Cool grey 6 C

NOTES:

1. REFER TO ARLO SPEC. DOC-50093 FOR COLOR TOLERANCES.

2. INK COLOR IS SHOWN TO THE RIGHT.

3. DIE LINES ARE MAGENTA COLOR AND DO NOT PRINT.

scale 1:1

molded onto the cover

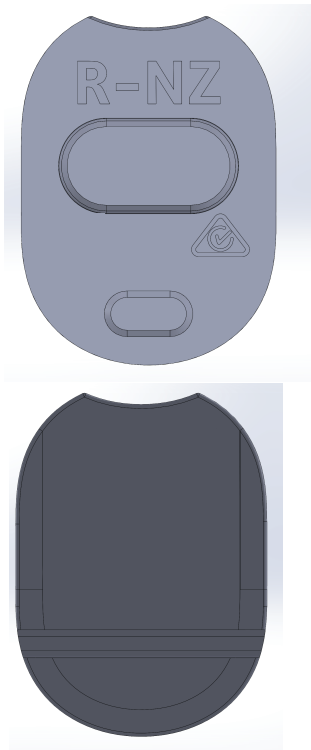

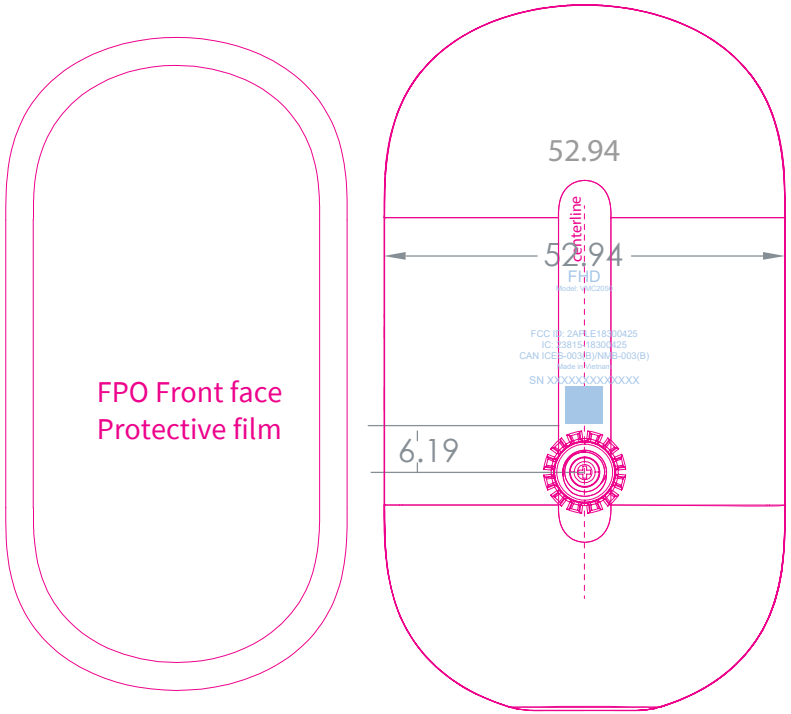

back enclosure

AUTHOR:	TITLE: SSD-50048-01 Outdoor Battery FHD		
SHEET: 1 of 1	THIS DOCUMENT AND THE DATA DISCLOSED HEREIN OR WHEREWITH IS NOT TO BE REPRODUCED, USED OR DISCLOSED IN WHOLE OR IN PART TO ANYONE WITHOUT THE PERMISSION OF ARLO, INC.	P/N:	REV: 09