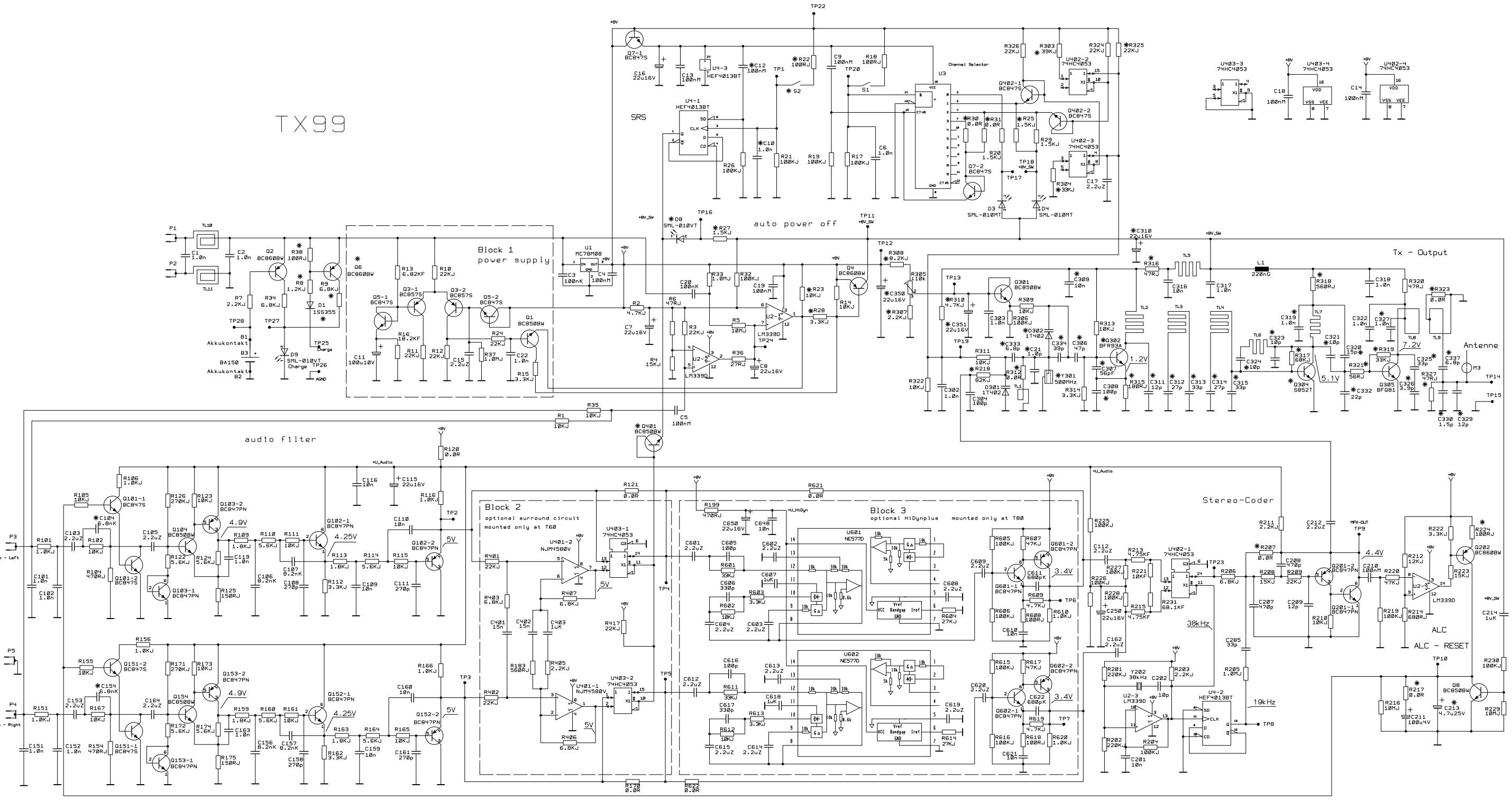

151299Pr11410

| | Variante | Type | S2 | R8 | R9 | R22 | R23 | R27 | R28 | R29 | R30 | R31 | R38 | R121 | R170 | R207 | R217 | R218 | R224 | R303 | R304 | R307 | R308 | R310 | R312 | R315 | R316 | R317 | R318 | R319 | R321 | R323 | R325 | R327 | C330 | R621 | R622 | C10 | C12 | C21 | C104 | C109 | C110 | C111 | C154 | C159 | C160 | C161 | C211 | C213 | C306 | C307 | C308 | C309 | C310 | C311 | C312 | C313 | C314 | C315 | C319 | C320 | C321 | C323 | C324 | C325 | C326 | C327 | C329 | C332 | C333 | C334 | C337 | C350 | C351 | Q6 | Q302 | Q304 | Q401 | Y301 | D1 | D8 | D302 | Block1 | Block2 | Block3 |
|---|---|---