Exhibit 5

Block Diagram
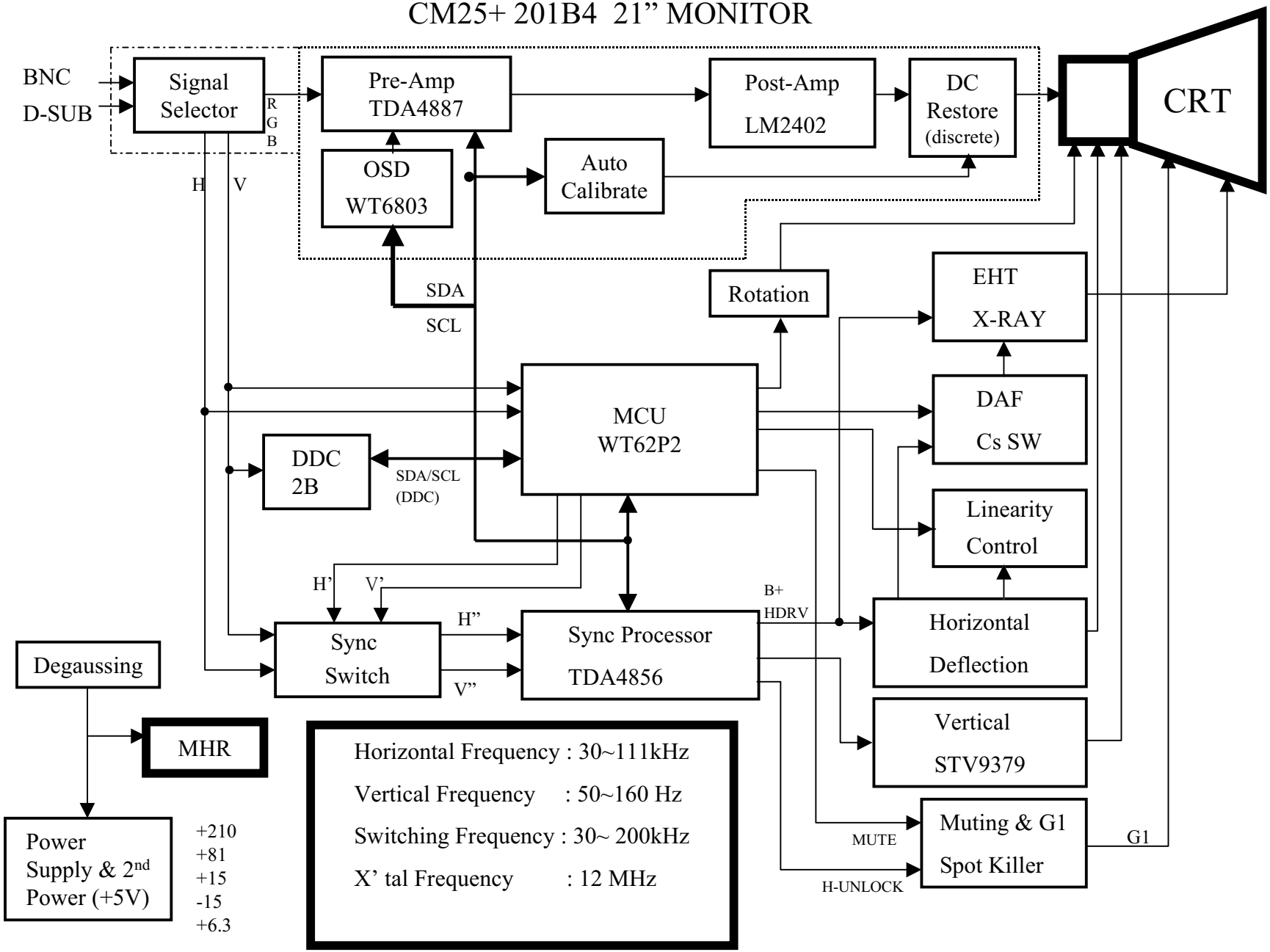
CM25+ 201B4 21" MONITOR