APPENDIX H: LTE DOWNLINK ONLY CARRIER AGGREGATION TEST REDUCTION METHODOLOGY

SAR test exclusion for LTE downlink Carrier Aggregation is determined by power measurements according to the number of component carriers (CCs) supported by the product implementation. Per April 2018 TCBC Workshop Notes, the following test reduction methodology was applied to determine the combinations required for conducted power measurements.

LTE DLCA Test Reduction Methodology:

- The supported combinations were arranged by the number of component carriers in columns.
- Any limitations on the PCC or SCC for each combination were identified alongside the combination (e.g. CA_2A-2A-4A-12A, but B12 can only be configured as a SCC).
- Power measurements were performed for "supersets" (LTE CA combinations with multiple components carriers) and any "subsets" (LTE CA combinations with fewer component carriers) that were not completely covered by the supersets.
- Only subsets that have the exact same components as a superset were excluded for measurement.
- When there were certain restrictions on component carriers that existed in the superset that were not applied for the subset, the subset configuration was additionally evaluated.
- Both inter-band and intra-band downlink carrier aggregation scenarios were considered.
- Downlink CA combinations for SISO and 4x4 Downlink MIMO operations were measured independently, per May 2017 TCBC Workshop notes.

Table H-1 – Example of Exclusion Table for SISO Configurations

Index	2CC	Supported Channel Bandwidth [MHz]		Restriction	Completely Covered by Measurement Superset
		CC1	CC2		
2CC #1	CA_2C	5, 10, 15, 20	5, 10, 15, 20		3CC #4
2CC #2	CA_2A-5A	5, 10, 15, 20	5, 10		4CC #1
2CC #3	CA_2A-12A	5, 10, 15, 20	5, 10		3CC #3
2CC #4	CA_2A-13A	5, 10, 15, 20	10		3CC #9
2CC #5	CA_2A-17A	5, 10	5, 10		No
2CC #6	CA_2A-30A	5, 10, 15, 20	5, 10		3CC #14
2CC #8	CA_2A-66A (2)	5, 10, 15, 20	5, 10, 15, 20		3CC #1
2CC #9	CA_2A-71A	5, 10, 15, 20	5, 10, 15, 20		3CC #10
2CC #10	CA_4A-4A	5, 10, 15, 20	5, 10, 15, 20		3CC #6
2CC #11	CA_4A-5A (1)	5, 10, 15, 20	5, 10		4CC #1
2CC #12	CA_4A-12A (4)	5, 10, 15, 20	5, 10		3CC #9
2CC #13	CA_4A-13A	5, 10, 15, 20	10		3CC #9
2CC #14	CA_4A-17A	5, 10	5, 10	B17 SCC Only	No
2CC #15	CA_5B	5, 10	5, 10		2CC #1
2CC #16	CA_5A-29A	5, 10	5, 10, 15, 20		No
2CC #17	CA_7C	15, 20	15, 20		No
2CC #18	CA_7A-7A (1)	5, 10, 15, 20	5, 10, 15, 20		No
2CC #19	CA_7A-12A	5, 10, 15, 20	5, 10		2CC #12
2CC #20	CA_12B	5, 10	5, 10		2CC #13
2CC #21	CA_12A-29A	5, 10	5, 10, 15, 20		No
2CC #22	CA_12A-30A	5, 10	5, 10		3CC #14
2CC #23	CA_41A-41A (1)	5, 10, 15, 20	5, 10, 15, 20		No

Index	3CC	Supported Channel Bandwidth [MHz]			Restriction	Completely Covered by Measurement Superset
		CC1	CC2	CC3		
3CC #1	CA_2A-2A-4A	5, 10, 15, 20	5, 10, 15, 20	5, 10, 15, 20		4CC #1
3CC #2	CA_2A-2A-5A	5, 10, 15, 20	5, 10, 15, 20	5, 10		No
3CC #3	CA_2A-2A-12A	5, 10, 15, 20	5, 10, 15, 20	5, 10		No
3CC #4	CA_2A-2C-13A	5, 10, 15, 20	5, 10, 15, 20	10		No
3CC #5	CA_2A-2C-17A	5, 10, 15, 20	5, 10, 15, 20	5, 10		No
3CC #6	CA_2A-2A-30A	5, 10, 15, 20	5, 10, 15, 20	5, 10		No
3CC #7	CA_2A-4A-66A	5, 10, 15, 20	5, 10, 15, 20	5, 10, 15, 20		No
3CC #8	CA_2A-4A-71A	5, 10, 15, 20	5, 10, 15, 20	5, 10, 15, 20		No
3CC #9	CA_2A-5B	5, 10, 15, 20	5, 10	5, 10		4CC #5
3CC #10	CA_2A-7A-12A	5, 10, 15, 20	5, 10, 15, 20	5, 10		No
3CC #11	CA_2A-12B	5, 10, 15, 20	5	5, 10		No
3CC #12	CA_2A-12A-30A	5, 10, 15, 20	5, 10	5, 10		No
3CC #13	CA_4A-4A-5A	5, 10, 15, 20	5, 10, 15, 20	5, 10		No
3CC #14	CA_5B-30A	5, 10	5, 10	5, 10		3CC #1
3CC #17	CA_5B-66A	5, 10	5, 10	5, 10, 15, 20		3CC #1
3CC #18	CA_5A-30A-66A	5, 10	5, 10	5, 10, 15, 20		4CC #3
3CC #19	CA_12A-66C	5, 10	5, 10, 15, 20	5, 10, 15, 20		No
3CC #20	CA_30B-66A-66A	5, 10	5, 10, 15, 20	5, 10, 15, 20		4CC #9
3CC #21	CA_41D	15, 15, 20	5, 10, 15, 20	15, 15, 20		No
3CC #22	CA_41A-41C	5, 10, 15, 20	5, 10, 15, 20	5, 10, 15, 20		No
3CC #23	CA_66D	5, 10, 15, 20	5, 10, 15, 20	5, 10, 15, 20		No
3CC #24	CA_66A-66C	5, 10, 15, 20	5, 10, 15, 20	5, 10, 15, 20		No

Index	4CC	Supported Channel Bandwidth [MHz]				Restriction	Completely Covered by Measurement Superset
		CC1	CC2	CC3	CC4		
4CC #1	CA_2A-2A-4A-5A	5, 10, 15, 20	5, 10, 15, 20	5, 10, 15, 20	5, 10		No
4CC #2	CA_2A-2A-4A-12A	5, 10, 15, 20	5, 10, 15, 20	5, 10, 15, 20	5, 10	B12 SCC Only	No
4CC #3	CA_2A-2A-5A-30A	5, 10, 15, 20	5, 10, 15, 20	5, 10	5, 10		No
4CC #4	CA_2A-2A-5A-66A	5, 10, 15, 20	5, 10, 15, 20	5, 10	5, 10, 15, 20		No
4CC #5	CA_2A-5B-30A	5, 10, 15, 20	5, 10	5, 10	5, 10		3CC #1
4CC #6	CA_2A-5B-66A	5, 10, 15, 20	5, 10	5, 10	5, 10, 15, 20		3CC #1
4CC #7	CA_5B-30A-66A	5, 10	5, 10	5, 10	5, 10		3CC #1
4CC #8	CA_5B-66A-66A	5, 10	5, 10	5, 10, 15, 20	5, 10, 15, 20		3CC #2
4CC #9	CA_5A-30A-66A-66A	5, 10	5, 10	5, 10, 15, 20	5, 10, 15, 20		No
4CC #10	CA_41C	15, 20	15, 20	15, 20	20		No

Index	5CC	Supported Channel Bandwidth [MHz]					Restriction	Completely Covered by Measurement Superset
		CC1	CC2	CC3	CC4	CC5		
5CC #1	CA_2A-5B-30A-66A	5, 10, 15, 20	5, 10	5, 10	5, 10	5, 10, 15, 20		No
5CC #2	CA_2A-5B-66A-66A	5, 10, 15, 20	5, 10	5, 10	5, 10, 15, 20	5, 10, 15, 20		No

Table H-2 – Example of Exclusion Table for 4x4 Downlink MIMO Configurations

Index	2CC	Supported Channel Bandwidth [MHz]		Restriction	Completely Covered by Measurement Superset
		CC1	CC2		
2CC #M1	CA_[2C]	5, 10, 15, 20	5, 10, 15, 20		3CC #M6
2CC #M2	CA_[2A]-2A	5, 10, 15, 20	5, 10, 15, 20		3CC #M1
2CC #M3	CA_[2A]-[2A]	5, 10, 15, 20	5, 10, 15, 20		No
2CC #M4	CA_[2A]-4A (2)	5, 10, 15, 20	5, 10, 15, 20		3CC #M1
2CC #M5	CA_[2A]-[4A] (2)	5, 10, 15, 20	5, 10, 15, 20		No
2CC #M6	CA_[2A]-5A	5, 10, 15, 20	5, 10		4CC #M3
2CC #M7	CA_[2A]-12A (1)	5, 10, 15, 20	3, 5, 10		No
2CC #M8	CA_[2A]-13A	5, 10, 15, 20	10		3CC #M4
2CC #M9	CA_[2A]-17A	5, 10	5, 10		No
2CC #M10	CA_[2A]-29A (2)	5, 10, 15, 20	5, 10	B29 SCC Only	3CC #M12
2CC #M11	CA_[2A]-30A	5, 10, 15, 20	5, 10		3CC #M5
2CC #M12	CA_[2A]-66A (2)	5, 10, 15, 20	5, 10, 15, 20		4CC #M1
2CC #M13	CA_2A-[66A] (2)	5, 10, 15, 20	5, 10, 15, 20		4CC #M2
2CC #M14	CA_[2A]-[66A] (2)	5, 10, 15, 20	5, 10, 15, 20		No
2CC #M15	CA_[2A]-71A	5, 10, 15, 20	5, 10, 15, 20		3CC #M11
2CC #M16	CA_5A-[66A]	5, 10	5, 10, 15, 20		3CC #M16
2CC #M17	CA_12A-[66A] (4)	5, 10	5, 10, 15, 20		3CC #M17
2CC #M18	CA_13A-[66A]	5, 10	5, 10, 15, 20		3CC #M19
2CC #M19	CA_30A-[66A]	5, 10	5, 10, 15, 20		3CC #M20
2CC #M20	CA_[66B]	5, 10, 15	5, 10, 15		4CC #M4
2CC #M21	CA_[66C]	5, 10, 15, 20	5, 10, 15, 20		4CC #M6
2CC #M22	CA_[66A]-66A	5, 10, 15, 20	5, 10, 15, 20		3CC #M28
2CC #M23	CA_[66A]-[66A]	5, 10, 15, 20	5, 10, 15, 20		No

Index	3CC	Supported Channel Bandwidth [MHz]			Restriction	Completely Covered by Measurement Superset
		CC1	CC2	CC3		
3CC #M1	CA_[2A]-2A-4A	5, 10, 15, 20	5, 10, 15, 20	5, 10, 15, 20		No
3CC #M2	CA_[2A]-2A-5A	5, 10, 15, 20	5, 10, 15, 20	5, 10		No
3CC #M3	CA_[2A]-2A-12A	5, 10, 15, 20	5, 10, 15, 20	5, 10		No
3CC #M4	CA_[2A]-2A-13A	5, 10, 15, 20	5, 10, 15, 20	10		No
3CC #M5	CA_[2A]-2A-30A	5, 10, 15, 20	5, 10, 15, 20	5, 10		No
3CC #M6	CA_[2C]-66A	5, 10, 15, 20	5, 10, 15, 20	5, 10, 15, 20		No
3CC #M7	CA_2C-[66A]	5, 10, 15, 20	5, 10, 15, 20	5, 10, 15, 20		No
3CC #M8	CA_[2C]-[66A]	5, 10, 15, 20	5, 10, 15, 20	5, 10, 15, 20		No
3CC #M9	CA_[2A]-2A-66A	5, 10, 15, 20	5, 10, 15, 20	5, 10, 15, 20		No
3CC #M10	CA_2A-2A-[66A]	5, 10, 15, 20	5, 10, 15, 20	5, 10, 15, 20		No
3CC #M11	CA_[2A]-2A-71A	5, 10, 15, 20	5, 10, 15, 20	5, 10, 15, 20		No
3CC #M12	CA_[2A]-4A-29A	5, 10, 15, 20	5, 10, 15, 20	5, 10	B29 SCC Only	No
3CC #M13	CA_[2A]-4A-71A	5, 10, 15, 20	5, 10, 15, 20	5, 10, 15, 20		No
3CC #M14	CA_[2A]-5B	5, 10, 15, 20	5, 10	5, 10		4CC #M1
3CC #M15	CA_[2A]-5A-66A	5, 10, 15, 20	5, 10	5, 10, 15, 20		No
3CC #M16	CA_2A-5A-[66A]	5, 10, 15, 20	5, 10	5, 10, 15, 20		No
3CC #M17	CA_2A-12A-[66A]	5, 10, 15, 20	5, 10	5, 10, 15, 20		No
3CC #M18	CA_[2A]-13A-66A	5, 10, 15, 20	5, 10	5, 10, 15, 20		No
3CC #M19	CA_2A-13A-[66A]	5, 10, 15, 20	5, 10	5, 10, 15, 20		No
3CC #M20	CA_2A-30A-[66A]	5, 10, 15, 20	5, 10	5, 10, 15, 20		No
3CC #M21	CA_[2A]-66B	5, 10, 15, 20	5, 10, 15	5, 10, 15		4CC #M3
3CC #M22	CA_2A-[66B]	5, 10, 15, 20	5, 10, 15	5, 10, 15		4CC #M4
3CC #M23	CA_[2A]-[66B]	5, 10, 15, 20	5, 10, 15	5, 10, 15		No
3CC #M24	CA_[2A]-66C	5, 10, 15, 20	5, 10, 15, 20	5, 10, 15, 20		4CC #M5
3CC #M25	CA_2A-[66C]	5, 10, 15, 20	5, 10, 15, 20	5, 10, 15, 20		4CC #M6
3CC #M26	CA_[2A]-[66C]	5, 10, 15, 20	5, 10, 15, 20	5, 10, 15, 20		No
3CC #M27	CA_[2A]-66A-66A	5, 10, 15, 20	5, 10, 15, 20	5, 10, 15, 20		No
3CC #M28	CA_2A-[66A]-66A	5, 10, 15, 20	5, 10, 15, 20	5, 10, 15, 20		No
3CC #M29	CA_[2A]-66A-71A	5, 10, 15, 20	5, 10, 15, 20	5, 10, 15, 20		No

Index	4CC	Supported Channel Bandwidth [MHz]				Restriction	Completely Covered by Measurement Superset
		CC1	CC2	CC3	CC4		
4CC #M1	CA_[2A]-5B-66A	5, 10, 15, 20	5, 10	5, 10	5, 10, 15, 20		No
4CC #M2	CA_2A-5B-[66A]	5, 10, 15, 20	5, 10	5, 10	5, 10, 15, 20		No
4CC #M3	CA_[2A]-5A-66B	5, 10, 15, 20	5, 10	5, 10, 15	5, 10, 15		No
4CC #M4	CA_2A-5A-[66B]	5, 10, 15, 20	5, 10	5, 10, 15	5, 10, 15		No
4CC #M5	CA_[2A]-5A-66C	5, 10, 15, 20	5, 10	5, 10, 15, 20	5, 10, 15, 20		No
4CC #M6	CA_2A-5A-[66C]	5, 10, 15, 20	5, 10	5, 10, 15, 20	5, 10, 15, 20		No

Note: [CC] indicates component carrier with 4x4 DL MIMO antenna configuration

H.1 LTE Downlink Only Carrier Aggregation Test Selection and Setup

SAR test exclusion for LTE downlink Carrier Aggregation is determined by power measurements according to the number component carriers (CCs) supported by the product implementation. For those configurations required by April 2018 TCBC Workshop Notes, conducted power measurements with LTE Carrier Aggregation (CA) (downlink only) active are made in accordance to KDB Publication 941225 D05Av01r02. The RRC connection is only handled by one cell, the primary component carrier (PCC) for downlink and uplink communications. After making a data connection to the PCC, the UE device adds secondary component carrier(s) (SCC) on the downlink only. All uplink communications and acknowledgements remain identical to specifications when downlink carrier aggregation is inactive on the PCC. Additional conducted output powers are measured with the downlink carrier aggregation active for the configuration with highest measured maximum conducted power with downlink carrier aggregation inactive measured among the channel bandwidth, modulation, and RB combinations in each frequency band.

This device supports LAA with downlink carrier aggregation only. It uses carrier aggregation in the downlink to combine LTE in the unlicensed spectrum (i.e. LTE Band 46) with LTE in the licensed band (served as PCC). All uplink communications and acknowledgements on the PCC remain identical to specifications when downlink carrier aggregation is inactive.

Per FCC KDB Publication 941225 D05Av01r02, no SAR measurements are required for carrier aggregation configurations when the maximum average output power with downlink only carrier aggregation active is not more than 0.25 dB higher than the average output power with downlink only carrier aggregation inactive. All bands required for SAR testing per FCC KDB procedures were considered. Based on the measured maximum powers below, no additional SAR tests were required for DLCA SAR configurations.

General PCC and SCC configuration selection procedure

- PCC uplink channel, channel bandwidth, modulation and RB configurations were selected based on section C)3)b)ii) of KDB 941225 D05 V01r02. All LTE bandwidth conducted powers needed for PCC uplink configuration selection can be found in the RF Conducted Powers Section and LTE/NR Lower Bandwidth RF Conducted Power Appendix. The downlink PCC channel was paired with the selected PCC uplink channel according to normal configurations without carrier aggregation.
- To maximize aggregated bandwidth, highest channel bandwidth available for that CA combination was selected for SCC. For inter-band CA, the SCC downlink channels were selected near the middle of their transmission bands. For contiguous intra-band CA, the downlink channel spacing between the component carriers was set to multiple of 300 kHz less than the nominal channel spacing defined in section 5.4.1A of 3GPP TS 36.521. For non-contiguous intra-band CA, the downlink channel spacing between the component carriers was set to be larger than the nominal channel spacing and provided maximum separation between the component carriers.
- All selected PCC and SCC(s) remained fully within the uplink/downlink transmission band of the respective component carrier.

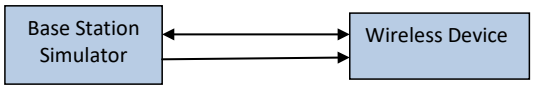

Figure H-1
DL CA Power Measurement Setup

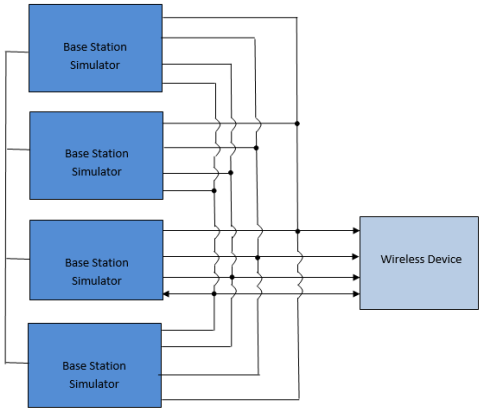

Figure H-2
DL CA with DL 4x4 MIMO Power Measurement Setup

H.2 Downlink Carrier Aggregation RF Conducted Powers

H.2.1 LTE Band 71 as PCC

Table H-3

	PCC									SCC 1				SCC 2				SCC 3				Power	
Combination	PCC Band	PCC BW [MHz]	PCC (UL) Ch.	PCC (UL) Freq. [MHz]	Mod.	PCC UL# RB	PCC UL RB Offset	PCC (DL) Channel	PCC (DL) Freq. [MHz]	SCC Band	SCC BW [MHz]	SCC (DL) Channel	SCC (DL) Freq. [MHz]	SCC Band	SCC BW [MHz]	SCC (DL) Channel	SCC (DL) Freq. [MHz]	SCC Band	SCC BW [MHz]	SCC (DL) Channel	SCC (DL) Freq. [MHz]	LTE Tx.Power with DL CA Enabled (dBm)	LTE Single Carrier Tx Power (dBm)
CA_4A-4A-71A	LTE B71	5	133297	680.5	QPSK	1	12	68761	634.5	LTE B4	20	2175	2132.5	LTE B4	10	2350	2150	-	-	-	-	24.33	24.37
CA_2A-2A-4A-71A	LTE B71	5	133297	680.5	QPSK	1	12	68761	634.5	LTE B2	20	900	1960	LTE B2	20	700	1940	LTE B4	20	2175	2132.5	24.35	24.37
CA_2A-2A-66A-71A	LTE B71	5	133297	680.5	QPSK	1	12	68761	634.5	LTE B2	20	900	1960	LTE B2	20	700	1940	LTE B66	20	66786	2145	24.34	24.37
CA_2A-66A-66A-71A	LTE B71	5	133297	680.5	QPSK	1	12	68761	634.5	LTE B2	20	900	1960	LTE B66	20	66786	2145	LTE B66	20	67236	2190	24.31	24.37
CA_2A-66C-71A	LTE B71	5	133297	680.5	QPSK	1	12	68761	634.5	LTE B2	20	900	1960	LTE B66	20	66786	2145	LTE B66	20	66984	2164.8	24.33	24.37

H.2.2 LTE Band 12 as PCC

Table H-4
Maximum Output Powers

	PCC									SCC 1				SCC 2				SCC 3				SCC 4				Power	
Combination	PCC Band	PCC BW [MHz]	PCC (UL) Ch.	PCC (UL) Freq. [MHz]	Mod.	PCC UL# RB	PCC UL RB Offset	PCC (DL) Channel	PCC (DL) Freq. [MHz]	SCC Band	SCC BW [MHz]	SCC (DL) Channel	SCC (DL) Freq. [MHz]	SCC Band	SCC BW [MHz]	SCC (DL) Channel	SCC (DL) Freq. [MHz]	SCC Band	SCC BW [MHz]	SCC (DL) Channel	SCC (DL) Freq. [MHz]	SCC Band	SCC BW [MHz]	SCC (DL) Channel	SCC (DL) Freq. [MHz]	LTE Tx.Power with DL CA Enabled (dBm)	LTE Single Carrier Tx Power (dBm)
CA_12A-66A (1)	LTE B12	10	23095	707.5	QPSK	1	0	5095	737.5	LTE B66	20	66786	2145	-	-	-	-	-	-	-	-	-	-	-	-	24.57	24.54
CA_12A-66A (2)	LTE B12	10	23095	707.5	QPSK	1	0	5095	737.5	LTE B66	20	66786	2145	-	-	-	-	-	-	-	-	-	-	-	-	24.57	24.54
CA_2A-12A (1)	LTE B12	10	23095	707.5	QPSK	1	0	5095	737.5	LTE B2	20	900	1960	-	-	-	-	-	-	-	-	-	-	-	-	24.62	24.54
CA_4A-12A (1)	LTE B12	10	23095	707.5	QPSK	1	0	5095	737.5	LTE B4	20	2175	2132.5	-	-	-	-	-	-	-	-	-	-	-	-	24.54	24.54
CA_4A-12A (2)	LTE B12	10	23095	707.5	QPSK	1	0	5095	737.5	LTE B4	20	2175	2132.5	-	-	-	-	-	-	-	-	-	-	-	-	24.54	24.54
CA_12B-66A	LTE B12	5	23155	713.5	QPSK	1	12	5155	743.5	LTE B12	10	5083	736.3	LTE B66	20	66786	2145	-	-	-	-	-	-	-	-	24.32	24.36
CA_2A-4A-12A	LTE B12	10	23095	707.5	QPSK	1	0	5095	737.5	LTE B2	20	900	1960	LTE B4	20	2175	2132.5	-	-	-	-	-	-	-	-	24.51	24.54
CA_4A-12A-30A	LTE B12	10	23095	707.5	QPSK	1	0	5095	737.5	LTE B4	20	2175	2132.5	LTE B30	10	9820	2355	-	-	-	-	-	-	-	-	24.50	24.54
CA_4A-12B	LTE B12	5	23155	713.5	QPSK	1	12	5155	743.5	LTE B12	10	5083	736.3	LTE B4	20	2175	2132.5	-	-	-	-	-	-	-	-	24.35	24.36
CA_4A-4A-12A	LTE B12	10	23095	707.5	QPSK	1	0	5095	737.5	LTE B4	20	2175	2132.5	LTE B4	10	2350	2150	-	-	-	-	-	-	-	-	24.52	24.54
CA_2A-12A-66C	LTE B12	10	23095	707.5	QPSK	1	0	5095	737.5	LTE B2	20	900	1960	LTE B66	20	66786	2145	LTE B66	20	66984	2164.8	-	-	-	-	24.46	24.54
CA_2A-12A-30A-66A-66A	LTE B12	10	23095	707.5	QPSK	1	0	5095	737.5	LTE B2	20	900	1960	LTE B30	10	9820	2355	LTE B66	20	66786	2145	LTE B66	20	67236	2190	24.51	24.54
CA_2A-2A-12A-30A-66A	LTE B12	10	23095	707.5	QPSK	1	0	5095	737.5	LTE B2	20	900	1960	LTE B2	20	700	1940	LTE B30	10	9820	2355	LTE B66	20	66786	2145	24.52	24.54
CA_2A-2A-12A-66A-66A	LTE B12	10	23095	707.5	QPSK	1	0	5095	737.5	LTE B2	20	900	1960	LTE B2	20	700	1940	LTE B66	20	66786	2145	LTE B66	20	67236	2190	24.47	24.54

H.2.3 LTE Band 13 as PCC

Table H-5
Maximum Output Powers

	PCC									SCC 1				SCC 2				SCC 3				SCC 4				SCC 5				Power	
Combination	PCC Band	PCC BW [MHz]	PCC (UL) Ch.	PCC (UL) Freq. [MHz]	Mod.	PCC UL# RB	PCC UL RB Offset	PCC (DL) Channel	PCC (DL) Freq. [MHz]	SCC Band	SCC BW [MHz]	SCC (DL) Channel	SCC (DL) Freq. [MHz]	SCC Band	SCC BW [MHz]	SCC (DL) Channel	SCC (DL) Freq. [MHz]	SCC Band	SCC BW [MHz]	SCC (DL) Channel	SCC (DL) Freq. [MHz]	SCC Band	SCC BW [MHz]	SCC (DL) Channel	SCC (DL) Freq. [MHz]	SCC Band	SCC BW [MHz]	SCC (DL) Channel	SCC (DL) Freq. [MHz]	LTE Tx.Power with DL CA Enabled (dBm)	LTE Single Carrier Tx Power (dBm)
CA_13A-46A-46A	LTE B13	5	23230	782	QPSK	1	12	5230	751	LTE B46	20	50665	5537.5	LTE B46	20	47090	5180	-	-	-	-	-	-	-	-	-	-	-	-	24.00	24.08
CA_13A-46A-46A	LTE B13	5	23230	782	QPSK	1	12	5230	751	LTE B46	20	50665	5537.5	LTE B66	20	66786	2145	-	-	-	-	-	-	-	-	-	-	-	-	24.01	24.08
CA_2A-13A-46A	LTE B13	5	23230	782	QPSK	1	12	5230	751	LTE B2	20	900	1960	LTE B46	20	50665	5537.5	-	-	-	-	-	-	-	-	-	-	-	-	24.03	24.08
CA_2A-4A-13A	LTE B13	10	23230	782	QPSK	1	0	5230	751	LTE B2	20	900	1960	LTE B4	20	2175	2132.5	-	-	-	-	-	-	-	-	-	-	-	-	24.09	24.05
CA_4A-4A-13A	LTE B13	10	23230	782	QPSK	1	0	5230	751	LTE B4	20	2175	2132.5	LTE B4	10	2350	2150	-	-	-	-	-	-	-	-	-	-	-	-	24.04	24.05
CA_13A-46C-46A	LTE B13	5	23230	782	QPSK	1	12	5230	751	LTE B46	20	50665	5537.5	LTE B46	20	50467	5517.7	LTE B66	20	66786	2145	-	-	-	-	-	-	-	-	24.01	24.08
CA_13A-48A-66B	LTE B13	5	23230	782	QPSK	1	12	5230	751	LTE B48	20	55990	3625	LTE B66	15	66786	2145	LTE B66	5	66879	2154.3	-	-	-	-	-	-	-	-	24.01	24.08
CA_13A-48A-66C	LTE B13	5	23230	782	QPSK	1	12	5230	751	LTE B48	20	55990	3625	LTE B66	20	66786	2145	LTE B66	20	66984	2164.8	-	-	-	-	-	-	-	-	24.00	24.08
CA_2A-13A-46C	LTE B13	5	23230	782	QPSK	1	12	5230	751	LTE B2	20	900	1960	LTE B46	20	50665	5537.5	LTE B46	20	50467	5517.7	-	-	-	-	-	-	-	-	24.02	24.08
CA_2A-13A-66B	LTE B13	5	23230	782	QPSK	1	12	5230	751	LTE B2	20	900	1960	LTE B66	15	66786	2145	LTE B66	5	66879	2154.3	-	-	-	-	-	-	-	-	24.03	24.08
CA_2A-13A-66C	LTE B13	5	23230	782	QPSK	1	12	5230	751	LTE B2	20	900	1960	LTE B66	20	66786	2145	LTE B66	20	66984	2164.8	-	-	-	-	-	-	-	-	24.00	24.08
CA_13A-46D-66A	LTE B13	5	23230	782	QPSK	1	12	5230	751	LTE B46	20	50665	5537.5	LTE B46	20	50467	5517.7	LTE B46	20	50863	5557.3	LTE B46	20	66786	2145	-	-	-	-	24.03	24.08
CA_13A-46E	LTE B13	5	23230	782	QPSK	1	12	5230	751	LTE B46	20	50665	5537.5	LTE B46	20	50467	5517.7	LTE B46	20	50863	5557.3	LTE B46	20	51061	5577.1	-	-	-	-	24.03	24.08
CA_13A-48A-48C-66A	LTE B13	5	23230	782	QPSK	1	12	5230	751	LTE B48	20	55990	3625	LTE B48	20	55340	3560	LTE B48	20	55538	3579.8	LTE B66	20	66786	2145	-	-	-	-	24.02	24.08
CA_13A-48A-48D	LTE B13	5	23230	782	QPSK	1	12	5230	751	LTE B48	20	55990	3625	LTE B48	20	55340	3560	LTE B48	20	55538	3579.8	LTE B48	20	55538	3579.6	-	-	-	-	24.05	24.08
CA_13A-48C-48C	LTE B13	5	23230	782	QPSK	1	12	5230	751	LTE B48	20	55990	3625	LTE B48	20	56188	3644.8	LTE B48	20	55340	3560	LTE B48	20	55538	3579.8	-	-	-	-	23.91	24.08
CA_13A-48C-66A-66A	LTE B13	5	23230	782	QPSK	1	12	5230	751	LTE B48	20	55990	3625	LTE B48	20	56188	3644.8	LTE B66	20	66786	2145	LTE B66	20	67236	2190	-	-	-	-	24.08	24.08
CA_13A-48E	LTE B13	5	23230	782	QPSK	1	12	5230	751	LTE B48	20	55990	3625	LTE B48	20	56188	3644.8	LTE B48	20	56386	3664.6	LTE B48	20	56584	3684.4	-	-	-	-	23.95	24.08
CA_2A-13A-46D	LTE B13	5	23230	782	QPSK	1	12	5230	751	LTE B2	20	900	1960	LTE B46	20	50665	5537.5	LTE B46	20	50467	5517.7	LTE B46	20	50863	5557.3	-	-	-	-	24.09	24.08
CA_2A-13A-48A-48A-66A	LTE B13	5	23230	782	QPSK	1	12	5230	751	LTE B2	20	900	1960	LTE B48	20	55990	3625	LTE B48	20	56640	3690	LTE B66	20	66786	2145	-	-	-	-	24.03	24.08
CA_2A-13A-48A-48C	LTE B13	5	23230	782	QPSK	1	12	5230	751	LTE B2	20	900	1960	LTE B48	20	55990	3625	LTE B48	20	56640	3690	LTE B48	20	56442	3670.2	-	-	-	-	23.99	24.08
CA_2A-13A-48A-66A-66A	LTE B13	5	23230	782	QPSK	1	12	5230	751	LTE B2	20	900	1960	LTE B48	20	55990	3625	LTE B66	20	66786	2145	LTE B66	20	67236	2190	-	-	-	-	24.04	24.08
CA_2A-13A-48C-66A	LTE B13	5	23230	782	QPSK	1	12	5230	751	LTE B2	20	900	1960	LTE B48	20	55990	3625	LTE B48	20	56188	3644.8	LTE B66	20	66786	2145	-	-	-	-	24.01	24.08
CA_2A-2A-13A-66A-66A	LTE B13	5	23230	782	QPSK	1	12	5230	751	LTE B2	20	900	1960	LTE B2	20	700	1940	LTE B66	20	66786	2145	LTE B66	20	67236	2190	-	-	-	-	24.01	24.08
CA_13A-48D-66A-66A	LTE B13	5	23230	782	QPSK	1	12	5230	751	LTE B48	20	55990	3625	LTE B48	20	56188	3644.8	LTE B48	20	56386	3664.6	LTE B66	20	66786	2145	LTE B66	20	67236	2190	24.07	24.08
CA_2A-13A-48D-66A	LTE B13	5	23230	782	QPSK	1	12	5230	751	LTE B2	20	900	1960	LTE B48	20	55990	3625	LTE B48	20	56188	3644.8	LTE B48	20	56386	3664.6	LTE B66	20	66786	2145	24.01	24.08

H.2.4 LTE Band 5 as PCC

Table H-6
Maximum Output Powers

	PCC									SCC 1				SCC 2				SCC 3				SCC 4				SCC 5				Power	
Combination	PCC Band	PCC BW [MHz]	PCC (UL) Ch.	PCC (UL) Freq. [MHz]	Mod.	PCC UL# RB	PCC UL RB Offset	PCC (DL) Channel	PCC (DL) Freq. [MHz]	SCC Band	SCC BW [MHz]	SCC (DL) Channel	SCC (DL) Freq. [MHz]	SCC Band	SCC BW [MHz]	SCC (DL) Channel	SCC (DL) Freq. [MHz]	SCC Band	SCC BW [MHz]	SCC (DL) Channel	SCC (DL) Freq. [MHz]	SCC Band	SCC BW [MHz]	SCC (DL) Channel	SCC (DL) Freq. [MHz]	SCC Band	SCC BW [MHz]	SCC (DL) Channel	SCC (DL) Freq. [MHz]	LTE Tx.Power with DL CA Enabled (dBm)	LTE Single Carrier Tx Power (dBm)
CA_5A-46A (1)	LTE B5	3	20525	836.5	QPSK	1	7	2525	881.5	LTE B46	20	50665	5537.5	-	-	-	-	-	-	-	-	-	-	-	-	-	-	-	-	24.07	24.14
CA_5A-5A (1)	LTE B5	3	20525	836.5	QPSK	1	7	2525	881.5	LTE B5	5	2425	871.5	-	-	-	-	-	-	-	-	-	-	-	-	-	-	-	-	24.13	24.14
CA_5B (1)	LTE B5	3	20525	836.5	QPSK	1	7	2525	881.5	LTE B5	5	2486	877.6	-	-	-	-	-	-	-	-	-	-	-	-	-	-	-	-	24.12	24.14
CA_2A-5A-46A	LTE B5	5	20625	846.5	QPSK	1	12	2625	891.5	LTE B2	20	900	1960	LTE B46	20	50665	5537.5	-	-	-	-	-	-	-	-	-	-	-	-	24.01	24.11
CA_4A-5A-30A	LTE B5	5	20625	846.5	QPSK	1	12	2625	891.5	LTE B4	20	2175	2132.5	LTE B30	10	9820	2355	-	-	-	-	-	-	-	-	-	-	-	-	24.03	24.11
CA_5A-46A-66A	LTE B5	5	20625	846.5	QPSK	1	12	2625	891.5	LTE B46	20	50665	5537.5	LTE B66	20	66786	2145	-	-	-	-	-	-	-	-	-	-	-	-	23.98	24.11
CA_5A-46C (1)	LTE B5	5	20625	846.5	QPSK	1	12	2625	891.5	LTE B46	20	50665	5537.5	LTE B46	20	50467	5517.7	-	-	-	-	-	-	-	-	-	-	-	-	23.97	24.11
CA_5B-46A	LTE B5	5	20625	846.5	QPSK	1	12	2625	891.5	LTE B5	10	2553	884.3	LTE B46	20	50665	5537.5	-	-	-	-	-	-	-	-	-	-	-	-	23.96	24.11
CA_2A-2A-4A-5A	LTE B5	5	20625	846.5	QPSK	1	12	2625	891.5	LTE B2	20	900	1960	LTE B2	20	700	1940	LTE B4	20	2175	2132.5	-	-	-	-	-	-	-	-	24.02	24.11
CA_2A-4A-4A-5A	LTE B5	5	20625	846.5	QPSK	1	12	2625	891.5	LTE B2	20	900	1960	LTE B4	20	2175	2132.5	LTE B4	10	2350	2150	-	-	-	-	-	-	-	-	24.04	24.11
CA_2A-4A-5B	LTE B5	5	20625	846.5	QPSK	1	12	2625	891.5	LTE B5	10	2553	884.3	LTE B2	20	900	1960	LTE B4	20	2175	2132.5	-	-	-	-	-	-	-	-	24.05	24.11
CA_2A-5A-46C	LTE B5	5	20625	846.5	QPSK	1	12	2625	891.5	LTE B2	20	900	1960	LTE B46	20	50665	5537.5	LTE B46	20	50467	5517.7	-	-	-	-	-	-	-	-	23.98	24.11
CA_2A-5A-48A-66A	LTE B5	5	20625	846.5	QPSK	1	12	2625	891.5	LTE B2	20	900	1960	LTE B48	20	55990	3625	LTE B66	20	66786	2145	-	-	-	-	-	-	-	-	24.02	24.11
CA_4A-4A-5B	LTE B5	5	20625	846.5	QPSK	1	12	2625	891.5	LTE B5	10	2553	884.3	LTE B4	20	2175	2132.5	LTE B4	10	2350	2150	-	-	-	-	-	-	-	-	24.03	24.11
CA_5A-46C-66A	LTE B5	5	20625	846.5	QPSK	1	12	2625	891.5	LTE B46	20	50665	5537.5	LTE B46	20	50467	5517.7	LTE B66	20	66786	2145	-	-	-	-	-	-	-	-	24.06	24.11
CA_5A-46D (1)	LTE B5	5	20625	846.5	QPSK	1	12	2625	891.5	LTE B46	20	50665	5537.5	LTE B46	20	50467	5517.7	LTE B46	20	50863	5557.3	-	-	-	-	-	-	-	-	24.03	24.11
CA_5A-5A-66A-66A	LTE B5	5	20625	846.5	QPSK	1	12	2625	891.5	LTE B5	5	2425	871.5	LTE B66	20	66786	2145	LTE B66	20	67236	2190	-	-	-	-	-	-	-	-	23.97	24.11
CA_5A-5A-66B	LTE B5	5	20625	846.5	QPSK	1	12	2625	891.5	LTE B5	5	2425	871.5	LTE B66	15	66786	2145	LTE B66	5	66879	2154.3	-	-	-	-	-	-	-	-	24.05	24.11
CA_5A-5A-66C	LTE B5	5	20625	846.5	QPSK	1	12	2625	891.5	LTE B5	5	2425	871.5	LTE B66	20	66786	2145	LTE B66	20	66984	2164.8	-	-	-	-	-	-	-	-	24.00	24.11
CA_5B-46C	LTE B5	5	20625	846.5	QPSK	1	12	2625	891.5	LTE B5	10	2553	884.3	LTE B46	20	50665	5537.5	LTE B46	20	50467	5517.7	-	-	-	-	-	-	-	-	24.01	24.11
CA_2A-2A-5A-30A-66A	LTE B5	5	20625	846.5	QPSK	1	12	2625	891.5	LTE B2	20	900	1960	LTE B2	20	700	1940	LTE B30	10	9820	2355	LTE B66	20	66786	2145	-	-	-	-	24.05	24.11
CA_2A-2A-5A-66A-66A	LTE B5	5	20625	846.5	QPSK	1	12	2625	891.5	LTE B2	20	900	1960	LTE B2	20	700	1940	LTE B66	20	66786	2145	LTE B66	20	67236	2190	-	-	-	-	24.05	24.11
CA_2A-2A-5A-66B	LTE B5	5	20625	846.5	QPSK	1	12	2625	891.5	LTE B2	20	900	1960	LTE B2	20	700	1940	LTE B66	15	66786	2145	LTE B66	5	66879	2154.3	-	-	-	-	24.06	24.11
CA_2A-2A-5A-66C	LTE B5	5	20625	846.5	QPSK	1	12	2625	891.5	LTE B2	20	900	1960	LTE B2	20	700	1940	LTE B66	20	66786	2145	LTE B66	20	66984	2164.8	-	-	-	-	24.03	24.11
CA_2A-5A-30A-66A-66A	LTE B5	5	20625	846.5	QPSK	1	12	2625	891.5	LTE B2	20	900	1960	LTE B30	10	9820	2355	LTE B66	20	66786	2145	LTE B66	20	67236	2190	-	-	-	-	24.07	24.11
CA_2A-5A-46D	LTE B5	5	20625	846.5	QPSK	1	12	2625	891.5	LTE B2	20	900	1960	LTE B46	20	50665	5537.5	LTE B46	20	50467	5517.7	LTE B46	20	50863	5557.3	-	-	-	-	24.07	24.11
CA_2A-5A-48A-66A-66A	LTE B5	5	20625	846.5	QPSK	1	12	2625	891.5	LTE B2	20	900	1960	LTE B48	20	55990	3625	LTE B66	20	66786	2145	LTE B66	20	67236	2190	-	-	-	-	23.99	24.11
CA_2A-5A-48C-66A	LTE B5	5	20625	846.5	QPSK	1	12	2625	891.5	LTE B2	20	900	1960	LTE B48	20	55990	3625	LTE B48	20	56188	3644.8	LTE B66	20	66786	2145	-	-	-	-	24.09	24.11
CA_2A-5B-30A-66A	LTE B5	5	20625	846.5	QPSK	1	12	2625	891.5	LTE B5	10	2553	884.3	LTE B2	20	900	1960	LTE B30	10	9820	2355	LTE B66	20	66786	2145	-	-	-	-	23.94	24.11
CA_2A-5B-66A-66A	LTE B5	5	20625	846.5	QPSK	1	12	2625	891.5	LTE B5	10	2553	884.3	LTE B2	20	900	1960	LTE B66	20	66786	2145	LTE B66	20	67236	2190	-	-	-	-	23.98	24.11
CA_2A-5B-66B	LTE B5	5	20625	846.5	QPSK	1	12	2625	891.5	LTE B5	10	2553	884.3	LTE B2	20	900	1960	LTE B66	15	66786	2145	LTE B66	5	66879	2154.3	-	-	-	-	24.00	24.11
CA_2A-5B-66C	LTE B5	5	20625	846.5	QPSK	1	12	2625	891.5	LTE B5	10	2553	884.3	LTE B2	20	900	1960	LTE B66	20	66786	2145	LTE B66	20	66984	2164.8	-	-	-	-	23.97	24.11
CA_5A-46D-66A	LTE B5	5	20625	846.5	QPSK	1	12	2625	891.5	LTE B46	20	50665	5537.5	LTE B46	20	50467	5517.7	LTE B46	20	50863	5557.3	LTE B66	20	66786	2145	-	-	-	-	24.04	24.11
CA_5A-46E (1)	LTE B5	5	20625	846.5	QPSK	1	12	2625	891.5	LTE B46	20	50665	5537.5	LTE B46	20	50467	5517.7	LTE B46	20	50863	5557.3	LTE B46	20	51061	5577.1	-	-	-	-	24.02	24.11
CA_5A-48C-66A-66A	LTE B5	5	20625	846.5	QPSK	1	12	2625	891.5	LTE B48	20	55990	3625	LTE B48	20	56188	3644.8	LTE B66	20	66786	2145	LTE B66	20	67236	2190	-	-	-	-	24.05	24.11
CA_5B-30A-66A-66A	LTE B5	5	20625	846.5	QPSK	1	12	2625	891.5	LTE B5	10	2553	884.3	LTE B30	10	9820	2355	LTE B66	20	66786	2145	LTE B66	20	67236	2190	-	-	-	-	23.98	24.11
CA_5B-46D	LTE B5	5	20625	846.5	QPSK	1	12	2625	891.5	LTE B5	10	2553	884.3	LTE B46	20	50665	5537.5	LTE B46	20	50467	5517.7	LTE B46	20	50863	5557.3	-	-	-	-	23.96	24.11
CA_2A-5A-48D-66A	LTE B5	5	20625	846.5	QPSK	1	12	2625	891.5	LTE B2	20	900	1960	LTE B48	20	55990	3625	LTE B48	20	56188	3644.8	LTE B48	20	56386	3664.6	LTE B66	20	66786	2145	24.07	24.11
CA_5A-48D-66A-66A	LTE B5	5	20625	846.5	QPSK	1	12	2625	891.5	LTE B48	20	55990	3625	LTE B48	20	56188	3644.8	LTE B48	20	56386	3664.6	LTE B66	20	66786	2145	LTE B66	20	67236	2190	24.02	24.11

H.2.5 LTE Band 66 as PCC

Table H-7
Maximum Output Powers

	PCC									SCC 1				SCC 2				SCC 3				SCC 4				SCC 5				Power	
Combination	PCC Band	PCC BW [MHz]	PCC (UL) Ch.	PCC (UL) Freq. [MHz]	Mod.	PCC UL# RB	PCC UL RB Offset	PCC (DL) Channel	PCC (DL) Freq. [MHz]	SCC Band	SCC BW [MHz]	SCC (DL) Channel	SCC (DL) Freq. [MHz]	SCC Band	SCC BW [MHz]	SCC (DL) Channel	SCC (DL) Freq. [MHz]	SCC Band	SCC BW [MHz]	SCC (DL) Channel	SCC (DL) Freq. [MHz]	SCC Band	SCC BW [MHz]	SCC (DL) Channel	SCC (DL) Freq. [MHz]	SCC Band	SCC BW [MHz]	SCC (DL) Channel	SCC (DL) Freq. [MHz]	LTE Tx.Power with DL CA Enabled (dBm)	LTE Single Carrier Tx Power (dBm)
CA_12A-66A (1)	LTE B66	10	132322	1745	QPSK	1	0	66786	2145	LTE B12	10	5095	737.5	-	-	-	-	-	-	-	-	-	-	-	-	-	-	-	-	24.55	24.54
CA_12A-66A (2)	LTE B66	10	132322	1745	QPSK	1	0	66786	2145	LTE B12	10	5095	737.5	-	-	-	-	-	-	-	-	-	-	-	-	-	-	-	-	24.55	24.54
CA_12B-66A	LTE B66	10	132322	1745	QPSK	1	0	66786	2145	LTE B12	5	5095	737.5	LTE B12	5	5047	732.7	-	-	-	-	-	-	-	-	-	-	-	-	24.47	24.54
CA_13A-46A-66A	LTE B66	10	132322	1745	QPSK	1	0	66786	2145	LTE B13	10	5230	751	LTE B46	20	50665	5537.5	-	-	-	-	-	-	-	-	-	-	-	-	24.51	24.54
CA_46A-48A-66A	LTE B66	10	132322	1745	QPSK	1	0	66786	2145	LTE B46	20	50665	5537.5	LTE B48	20	55990	3625	-	-	-	-	-	-	-	-	-	-	-	-	24.48	24.54
CA_46A-66A-66A	LTE B66	10	132322	1745	QPSK	1	0	66786	2145	LTE B66	20	67236	2190	LTE B46	20	50665	5537.5	-	-	-	-	-	-	-	-	-	-	-	-	24.53	24.54
CA_46A-66C	LTE B66	10	132322	1745	QPSK	1	0	66786	2145	LTE B66	20	66642	2130.6	LTE B46	20	50665	5537.5	-	-	-	-	-	-	-	-	-	-	-	-	24.50	24.54
CA_5A-46A-66A	LTE B66	10	132322	1745	QPSK	1	0	66786	2145	LTE B5	10	2525	881.5	LTE B46	20	50665	5537.5	-	-	-	-	-	-	-	-	-	-	-	-	24.52	24.54
CA_66D	LTE B66	10	132322	1745	QPSK	1	0	66786	2145	LTE B66	20	66642	2130.6	LTE B66	20	66930	2159.4	-	-	-	-	-	-	-	-	-	-	-	-	24.51	24.54
CA_13A-46C-66A	LTE B66	10	132322	1745	QPSK	1	0	66786	2145	LTE B13	10	5230	751	LTE B46	20	50665	5537.5	LTE B46	20	50467	5517.7	-	-	-	-	-	-	-	-	24.49	24.54
CA_13A-48A-66B	LTE B66	10	132322	1745	QPSK	1	0	66786	2145	LTE B66	10	66687	2135.1	LTE B13	10	5230	751	LTE B48	20	55990	3625	-	-	-	-	-	-	-	-	24.48	24.54
CA_13A-48A-66C	LTE B66	10	132322	1745	QPSK	1	0	66786	2145	LTE B66	20	66642	2130.6	LTE B13	10	5230	751	LTE B48	20	55990	3625	-	-	-	-	-	-	-	-	24.52	24.54
CA_29A-30A-66A-66A	LTE B66	10	132322	1745	QPSK	1	0	66786	2145	LTE B66	20	67236	2190	LTE B29	10	9715	722.5	LTE B30	10	9820	2355	-	-	-	-	-	-	-	-	24.53	24.54
CA_2A-12A-66C	LTE B66	10	132322	1745	QPSK	1	0	66786	2145	LTE B66	20	66642	2130.6	LTE B2	20	900	1960	LTE B12	10	5095	737.5	-	-	-	-	-	-	-	-	24.54	24.54
CA_2A-13A-66B	LTE B66	10	132322	1745	QPSK	1	0	66786	2145	LTE B66	10	66687	2135.1	LTE B2	20	900	1960	LTE B13	10	5230	751	-	-	-	-	-	-	-	-	24.56	24.54
CA_2A-13A-66C	LTE B66	10	132322	1745	QPSK	1	0	66786	2145	LTE B66	20	66642	2130.6	LTE B2	20	900	1960	LTE B13	10	5230	751	-	-	-	-	-	-	-	-	24.49	24.54
CA_2A-29A-30A-66A	LTE B66	10	132322	1745	QPSK	1	0	66786	2145	LTE B2	20	900	1960	LTE B29	10	9715	722.5	LTE B30	10	9820	2355	-	-	-	-	-	-	-	-	24.55	24.54
CA_2A-2A-66A-71A	LTE B66	10	132322	1745	QPSK	1	0	66786	2145	LTE B2	20	900	1960	LTE B2	20	700	1940	LTE B71	20	68761	634.5	-	-	-	-	-	-	-	-	24.51	24.54
CA_2A-46A-46A-66A	LTE B66	10	132322	1745	QPSK	1	0	66786	2145	LTE B2	20	900	1960	LTE B46	20	50665	5537.5	LTE B46	20	47090	5180	-	-	-	-	-	-	-	-	24.54	24.54
CA_2A-5A-48A-66A	LTE B66	10	132322	1745	QPSK	1	0	66786	2145	LTE B2	20	900	1960	LTE B5	10	2525	881.5	LTE B48	20	55990	3625	-	-	-	-	-	-	-	-	24.55	24.54
CA_2A-66A-66A-66A	LTE B66	10	132322	1745	QPSK	1	0	66786	2145	LTE B66	20	66536	2120	LTE B66	20	67236	2190	LTE B2	20	900	1960	-	-	-	-	-	-	-	-	24.52	24.54
CA_2A-66A-66A-71A	LTE B66	10	132322	1745	QPSK	1	0	66786	2145	LTE B66	20	67236	2190	LTE B2	20	900	1960	LTE B71	20	68761	634.5	-	-	-	-	-	-	-	-	24.51	24.54
CA_2A-66C-71A	LTE B66	10	132322	1745	QPSK	1	0	66786	2145	LTE B66	20	66642	2130.6	LTE B2	20	900	1960	LTE B71	20	68761	634.5	-	-	-	-	-	-	-	-	24.50	24.54
CA_2C-66A-66A	LTE B66	10	132322	1745	QPSK	1	0	66786	2145	LTE B66	20	67236	2190	LTE B2	20	900	1960	LTE B2	20	702	1940.2	-	-	-	-	-	-	-	-	24.55	24.54
CA_46A-48C-66A	LTE B66	10	132322	1745	QPSK	1	0	66786	2145	LTE B46	20	50665	5537.5	LTE B48	20	55990	3625	LTE B48	20	56188	3644.8	-	-	-	-	-	-	-	-	24.54	24.54
CA_46C-48A-66A	LTE B66	10	132322	1745	QPSK	1	0	66786	2145	LTE B46	20	50665	5537.5	LTE B46	20	50467	5517.7	LTE B48	20	55990	3625	-	-	-	-	-	-	-	-	24.53	24.54
CA_46C-66A-66A	LTE B66	10	132322	1745	QPSK	1	0	66786	2145	LTE B66	20	67236	2190	LTE B46	20	50665	5537.5	LTE B46	20	50467	5517.7	-	-	-	-	-	-	-	-	24.52	24.54
CA_48A-48A-66A-66A	LTE B66	10	132322	1745	QPSK	1	0	66786	2145	LTE B66	20	67236	2190	LTE B48	20	55990	3625	LTE B48	20	55340	3560	-	-	-	-	-	-	-	-	24.52	24.54
CA_48A-48A-66B	LTE B66	10	132322	1745	QPSK	1	0	66786	2145	LTE B66	10	66687	2135.1	LTE B48	20	55990	3625	LTE B48	20	55340	3560	-	-	-	-	-	-	-	-	24.54	24.54
CA_48A-48A-66C	LTE B66	10	132322	1745	QPSK	1	0	66786	2145	LTE B66	20	66642	2130.6	LTE B48	20	55990	3625	LTE B48	20	55340	3560	-	-	-	-	-	-	-	-	24.56	24.54
CA_5A-46C-66A	LTE B66	10	132322	1745	QPSK	1	0	66786	2145	LTE B5	10	2525	881.5	LTE B46	20	50665	5537.5	LTE B46	20	50467	5517.7	-	-	-	-	-	-	-	-	24.54	24.54
CA_5A-5A-66A-66A	LTE B66	10	132322	1745	QPSK	1	0	66786	2145	LTE B66	20	67236	2190	LTE B5	10	2525	881.5	LTE B5	5	2425	871.5	-	-	-	-	-	-	-	-	24.49	24.54
CA_5A-5A-66B	LTE B66	10	132322	1745	QPSK	1	0	66786	2145	LTE B66	10	66687	2135.1	LTE B5	10	2525	881.5	LTE B5	5	2425	871.5	-	-	-	-	-	-	-	-	24.54	24.54
CA_5A-5A-66C	LTE B66	10	132322	1745	QPSK	1	0	66786	2145	LTE B66	20	66642	2130.6	LTE B5	10	2525	881.5	LTE B5	5	2425	871.5	-	-	-	-	-	-	-	-	24.55	24.54
CA_13A-46D-66A	LTE B66	10	132322	1745	QPSK	1	0	66786	2145	LTE B13	10	5230	751	LTE B46	20	50665	5537.5	LTE B46	20	50467	5517.7	LTE B46	20	50863	5557.3	-	-	-	-	24.48	24.54
CA_13A-48A-48C-66A	LTE B66	10	132322	1745	QPSK	1	0	66786	2145	LTE B13	10	5230	751	LTE B48	20	55990	3625	LTE B48	20	55340	3560	LTE B48	20	55538	3579.8	-	-	-	-	24.52	24.54
CA_13A-48C-66A-66A	LTE B66	10	132322	1745	QPSK	1	0	66786	2145	LTE B66	20	67236	2190	LTE B13	10	5230	751	LTE B48	20	55990	3625	LTE B48	20	56188	3644.8	-	-	-	-	24.11	24.54
CA_2A-12A-30A-66A-66A	LTE B66	10	132322	1745	QPSK	1	0	66786	2145	LTE B66	20	67236	2190	LTE B2	20	900	1960	LTE B12	10	5095	737.5	LTE B30	10	9820	2355	-	-	-	-	24.56	24.54
CA_2A-13A-48A-48A-66A	LTE B66	10	132322	1745	QPSK	1	0	66786	2145	LTE B2	20	900	1960	LTE B13	10	5230	751	LTE B48	20	55990	3625	LTE B48	20	55340	3560	-	-	-	-	24.51	24.54
CA_2A-13A-48A-66A-66A	LTE B66	10	132322	1745	QPSK	1	0	66786	2145	LTE B66	20	67236	2190	LTE B2	20	900	1960	LTE B13	10	5230	751	LTE B48	20	55990	3625	-	-	-	-	24.52	24.54
CA_2A-13A-48C-66A	LTE B66	10	132322	1745	QPSK	1	0	66786	2145	LTE B2	20	900	1960	LTE B13	10	5230	751	LTE B48	20	55990	3625	LTE B48	20	56188	3644.8	-	-	-	-	24.54	24.54
CA_2A-2A-12A-30A-66A	LTE B66	10	132322	1745	QPSK	1	0	66786	2145	LTE B2	20	900	1960	LTE B2	20	700	1940	LTE B12	10	5095	737.5	LTE B30	10	9820	2355	-	-	-	-	24.49	24.54
CA_2A-2A-12A-66A-66A	LTE B66	10	132322	1745	QPSK	1	0	66786	2145	LTE B66	20	67236	2190	LTE B2	20	900	1960	LTE B2	20	700	1940	LTE B12	10	5095	737.5	-	-	-	-	24.48	24.54
CA_2A-2A-13A-66A-66A	LTE B66	10	132322	1745	QPSK	1	0	66786	2145	LTE B66	20	67236	2190	LTE B2	20	900	1960	LTE B2	20	700	1940	LTE B13	10	5230	751	-	-	-	-	24.60	24.54
CA_2A-2A-5A-30A-66A	LTE B66	10	132322	1745	QPSK	1	0	66786	2145	LTE B2	20	900	1960	LTE B2	20	700	1940	LTE B5	10	2525	881.5	LTE B30	10	9820	2355	-	-	-	-	24.59	24.54
CA_2A-2A-5A-66A-66A	LTE B66	10	132322	1745	QPSK	1	0	66786	2145	LTE B66	20	67236	2190	LTE B2	20	900	1960	LTE B2	20	700	1940	LTE B5	10	2525	881.5	-	-	-	-	24.58	24.54
CA_2A-2A-5A-66B	LTE B66	10	132322	1745	QPSK	1	0	66786	2145	LTE B66	10	66687	2135.1	LTE B2	20	900	1960	LTE B2	20	700	1940	LTE B5	10	2525	881.5	-	-	-	-	24.60	24.54
CA_2A-2A-5A-66C	LTE B66	10	132322	1745	QPSK	1	0	66786	2145	LTE B66	20	66642	2130.6	LTE B2	20	900	1960	LTE B2	20	700	1940	LTE B5	10	2525	881.5	-	-	-	-	24.60	24.54
CA_2A-46A-46C-66A	LTE B66	10	132322	1745	QPSK	1	0	66786	2145	LTE B2	20	900	1960	LTE B46	20	50665	5537.5	LTE B46	20	50467	5517.7	LTE B46	20	53540	5825	-	-	-	-	24.49	24.54
CA_2A-46D-66A	LTE B66	10	132322	1745	QPSK	1	0	66786	2145	LTE B2	20	900	1960	LTE B46	20	50665	5537.5	LTE B46	20	50467	5517.7	LTE B46	20	50863	5557.3	-	-	-	-	24.54	24.54
CA_2A-48A-48C-66A	LTE B66	10	132322	1745	QPSK	1	0	66786	2145	LTE B2	20	900	1960	LTE B48	20	55990	3625	LTE B48	20	55340	3560	LTE B48	20	55538	3579.8	-	-	-	-	24.50	24.54
CA_2A-48C-66A-66A	LTE B66	10	132322	1745	QPSK	1	0	66786	2145	LTE B66	20	67236	2190	LTE B2	20	900	1960	LTE B48	20	55990	3625	LTE B48	20	56188	3644.8	-	-	-	-	24.51	24.54
CA_2A-5A-30A-66A-66A	LTE B66	10	132322	1745	QPSK	1	0	66786	2145	LTE B66	20	67236	2190	LTE B2	20	900	1960	LTE B5	10	2525	881.5	LTE B30	10	9820	2355	-	-	-	-	24.55	24.54
CA_2A-5A-48A-66A-66A	LTE B66	10	132322	1745	QPSK	1	0	66786	2145	LTE B66	20	67236	2190	LTE B2	20	900	1960	LTE B5	10	2525	881.5	LTE B48	20	55990	3625	-	-	-	-	24.54	24.54
CA_2A-5A-48C-66A	LTE B66	10	132322	1745	QPSK	1	0	66786	2145	LTE B2	20	900	1960	LTE B5	10	2525	881.5	LTE B48	20	55990	3625	LTE B48	20	56188	3644.8	-	-	-	-	24.56	24.54
CA_2A-5B-30A-66A	LTE B66	10	132322	1745	QPSK	1	0	66786	2145	LTE B2	20	900	1960	LTE B5	10	2525	881.5	LTE B5	5	2453	874.3	LTE B30	10	9820	2355	-	-	-	-	24.54	24.54
CA_2A-5B-66A-66A	LTE B66	10	132322	1745	QPSK	1	0	66786	2145	LTE B66	20	67236	2190	LTE B2	20	900	1960	LTE B5	10	2525	881.5	LTE B5	5	2453	874.3	-	-	-	-	24.57	24.54
CA_2A-5B-66B	LTE B66	10	132322	1745	QPSK	1	0	66786	2145	LTE B66	10	66687	2135.1	LTE B2	20	900	1960	LTE B5	10	2525	881.5	LTE B5	5	2453	874.3	-	-	-	-	24.52	24.54
CA_2A-5B-66C	LTE B66	10	132322	1745	QPSK	1	0	66786	2145	LTE B66	20	66642	2130.6	LTE B2	20	900	1960	LTE B5	10	2525	881.5	LTE B5	5	2453	874.3	-	-	-	-	24.48	24.54
CA_46A-46D-66A	LTE B66	10	132322	1745	QPSK	1	0	66786	2145	LTE B46	20	50665	5537.5	LTE B46	20	53540	5825	LTE B46	20	53342	5805.2	LTE B46	20	53144	5785.4	-	-	-	-	24.53	24.54
CA_46A-48D-66A	LTE B66	10	132322	1745	QPSK	1	0	66786	2145	LTE B46	20	50665	5537.5	LTE B48	20	55990	3625	LTE B48	20	56188	3644.8	LTE B48	20	56386	3664.6	-	-	-	-	24.50	24.54
CA_46C-48C-66A	LTE B66	10	132322	1745	QPSK	1	0	66786	2145	LTE B46	20	50665	5537.5	LTE B46	20	50467	5517.7	LTE B48	20	55990	3625	LTE B48	20	56188	3644.8	-	-	-	-	24.50	24.54
CA_46D-48A-66A	LTE B66	10	132322	1745	QPSK	1	0	66786	2145	LTE B46	20	50665	5537.5	LTE B46	20	50467	5517.7	LTE B46	20	50863	5557.3	LTE B48	20	55990	3625	-	-	-	-	24.49	24.54
CA_46D-66A-66A	LTE B66	10	132322	1745	QPSK	1	0	66786	2145	LTE B66	20	67236	2190	LTE B46	20	50665	5537.5	LTE B46	20	50467	5517.7	LTE B46	20	50863	5557.3	-	-	-	-	24.54	24.54
CA_48A-48C-66B	LTE B66	10	132322	1745	QPSK	1	0	66786	2145	LTE B66	10	66687	2135.1	LTE B48	20	55990	3625	LTE B48	20	55340	3560	LTE B48	20	55538	3579.8	-	-	-	-	24.52	24.54
CA_48A-48C-66C	LTE B66	10	132322	1745	QPSK	1	0	66786	2145	LTE B66	20	66642	2130.6	LTE B48	20	55990	3625	LTE B48	20	55340	3560	LTE B48	20	55538	3579.8	-	-	-	-	24.50	24.54
CA_48A-48D-66A	LTE B66	10	132322	1745	QPSK	1	0	66786	2145	LTE B48	20	55990	3625	LTE B48	20	56640	3690	LTE B48	20	56442	3670.2	LTE B48	20	56244	3650.4	-	-	-	-	24.51	24.54
CA_48C-48C-66A	LTE B66	10	132322	1745	QPSK	1	0	66786	2145	LTE B48	20	55990	3625	LTE B48	20	56188	3644.8	LTE B48	20	55340	3560	LTE B48	20	55538	3579.8	-	-	-	-	24.54	24.54
CA_5A-46D-66A	LTE B66	10	132322	1745	QPSK	1	0	66786	2145	LTE B5	10	2525	881.5	LTE B46	20	50665	5537.5	LTE B46	20	50467	5517.7	LTE B46	20	50863	5557.3	-	-	-	-	24.50	24.54
CA_5A-48C-66A-66A	LTE B66	10	132322	1745	QPSK	1	0	66786	2145	LTE B66	20	67236	2190	LTE B5	10	2525	881.5	LTE B48	20	55990	3625	LTE B48	20	56188	3644.8	-	-	-	-	24.53	24.54
CA_5B-30A-66A-66A	LTE B66	10	132322	1745	QPSK	1	0	66786	2145	LTE B66	20	67236	2190	LTE B5	10	2525	881.5	LTE B5	5	2453	874.3	LTE B30	10	9820	2355	-	-	-	-	24.53	24.54
CA_13A-48D-66A-66A	LTE B66	10	132322	1745	QPSK	1	0	66786	2145	LTE B66	20	67236	2190	LTE B13	10	5230	751	LTE B48	20	55990	3625	LTE B48	20	56188	3644.8	LTE B48	20	56386	3664.6	24.51	24.54
CA_2A-13A-48D-66A	LTE B66	10	132322	1745	QPSK	1	0	66786	2145	LTE B2	20	900	1960	LTE B13	10	5230	751	LTE B48	20	55990	3625	LTE B48	20	56188	3644.8	LTE B48	20	56386	3664.6	24.47	24.54
CA_2A-46E-66A	LTE B66	10	132322	1745	QPSK	1	0	66786	2145	LTE B2	20	900	1960	LTE B46	20	50665	5537.5	LTE B46	20	50467	5517.7	LTE B46	20	50863	5557.3	LTE B46	20	50269	5497.9	24.52	24.54
CA_2A-48D-66A-66A	LTE B66	10	132322	1745	QPSK	1	0	66786	2145	LTE B66	20	67236	2190	LTE B2	20	900	1960	LTE B48	20	55990	3625	LTE B48	20	56188	3644.8	LTE B48	20	56386	3664.6	24.51	24.54
CA_2A-48E-66A	LTE B66	10	132322	1745	QPSK	1	0	66786	2145	LTE B2	20	900	1960	LTE B48	20	55990	3625	LTE B48	20	56188	3644.8	LTE B48	20	56386	3664.6	LTE B48	20	55792	3605.2	24.47	24.54
CA_2A-5A-48D-66A	LTE B66	10	132322	1745	QPSK	1	0	66786	2145	LTE B2	20	900	1960	LTE B5	10	2525	881.5	LTE B48	20	55990	3625	LTE B48	20	56188	3644.8	LTE B48	20	56386	3664.6	24.51	24.54
CA_5A-48D-66A-66A	LTE B66	10	132322	1745	QPSK	1	0	66786	2145	LTE B66	20	67236	2190	LTE B5	10	2525	881.5	LTE B48	20	55990	3625	LTE B48	20	56188	3644.8	LTE B48	20	56386	3664.6	24.53	24.54

H.2.6 LTE Band 30 as PCC

Table H-8
Maximum Output Powers

	PCC									SCC 1				SCC 2				SCC 3				SCC 4				Power	
Combination	PCC Band	PCC BW [MHz]	PCC (UL) Ch.	PCC (UL) Freq. [MHz]	Mod.	PCC UL# RB	PCC UL RB Offset	PCC (DL) Channel	PCC (DL) Freq. [MHz]	SCC Band	SCC BW [MHz]	SCC (DL) Channel	SCC (DL) Freq. [MHz]	SCC Band	SCC BW [MHz]	SCC (DL) Channel	SCC (DL) Freq. [MHz]	SCC Band	SCC BW [MHz]	SCC (DL) Channel	SCC (DL) Freq. [MHz]	SCC Band	SCC BW [MHz]	SCC (DL) Channel	SCC (DL) Freq. [MHz]	LTE Tx.Power with DL CA Enabled (dBm)	LTE Single Carrier Tx Power (dBm)
CA_2A-4A-30A	LTE B30	5	27710	2310	QPSK	1	12	9820	2355	LTE B2	20	900	1960	LTE B4	20	2175	2132.5	-	-	-	-	-	-	-	-	23.45	23.52
CA_4A-12A-30A	LTE B30	5	27710	2310	QPSK	1	12	9820	2355	LTE B4	20	2175	2132.5	LTE B12	10	5095	737.5	-	-	-	-	-	-	-	-	23.47	23.52
CA_4A-29A-30A	LTE B30	5	27710	2310	QPSK	1	12	9820	2355	LTE B4	20	2175	2132.5	LTE B29	10	9715	722.5	-	-	-	-	-	-	-	-	23.45	23.52
CA_4A-5A-30A	LTE B30	5	27710	2310	QPSK	1	12	9820	2355	LTE B4	20	2175	2132.5	LTE B5	10	2525	881.5	-	-	-	-	-	-	-	-	23.48	23.52
CA_29A-30A-66A-66A	LTE B30	5	27710	2310	QPSK	1	12	9820	2355	LTE B29	10	9715	722.5	LTE B66	20	66786	2145	LTE B66	20	67236	2190	-	-	-	-	23.45	23.52
CA_2A-29A-30A-66A	LTE B30	5	27710	2310	QPSK	1	12	9820	2355	LTE B2	20	900	1960	LTE B29	10	9715	722.5	LTE B66	20	66786	2145	-	-	-	-	23.43	23.52
CA_2A-2A-29A-30A	LTE B30	5	27710	2310	QPSK	1	12	9820	2355	LTE B2	20	900	1960	LTE B2	20	700	1940	LTE B29	10	9715	722.5	-	-	-	-	23.44	23.52
CA_2A-12A-30A-66A-66A	LTE B30	5	27710	2310	QPSK	1	12	9820	2355	LTE B2	20	900	1960	LTE B12	10	5095	737.5	LTE B66	20	66786	2145	LTE B66	20	67236	2190	23.51	23.52
CA_2A-2A-12A-30A-66A	LTE B30	5	27710	2310	QPSK	1	12	9820	2355	LTE B2	20	900	1960	LTE B2	20	700	1940	LTE B12	10	5095	737.5	LTE B66	20	66786	2145	23.48	23.52
CA_2A-2A-5A-30A-66A	LTE B30	5	27710	2310	QPSK	1	12	9820	2355	LTE B2	20	900	1960	LTE B2	20	700	1940	LTE B5	10	2525	881.5	LTE B66	20	66786	2145	23.46	23.52
CA_2A-5A-30A-66A-66A	LTE B30	5	27710	2310	QPSK	1	12	9820	2355	LTE B2	20	900	1960	LTE B5	10	2525	881.5	LTE B66	20	66786	2145	LTE B66	20	67236	2190	23.50	23.52
CA_2A-5B-30A-66A	LTE B30	5	27710	2310	QPSK	1	12	9820	2355	LTE B2	20	900	1960	LTE B5	10	2525	881.5	LTE B5	5	2453	874.3	LTE B66	20	66786	2145	23.47	23.52
CA_5B-30A-66A-66A	LTE B30	5	27710	2310	QPSK	1	12	9820	2355	LTE B5	10	2525	881.5	LTE B5	5	2453	874.3	LTE B66	20	66786	2145	LTE B66	20	67236	2190	23.46	23.52

H.2.7 LTE Band 41 as PCC

Table H-9
Maximum Output Powers

	PCC									SCC 1				SCC 2				SCC 3				SCC 4				Power	
Combination	PCC Band	PCC BW [MHz]	PCC (UL) Ch.	PCC (UL) Freq. [MHz]	Mod.	PCC UL# RB	PCC UL RB Offset	PCC (DL) Channel	PCC (DL) Freq. [MHz]	SCC Band	SCC BW [MHz]	SCC (DL) Channel	SCC (DL) Freq. [MHz]	SCC Band	SCC BW [MHz]	SCC (DL) Channel	SCC (DL) Freq. [MHz]	SCC Band	SCC BW [MHz]	SCC (DL) Channel	SCC (DL) Freq. [MHz]	SCC Band	SCC BW [MHz]	SCC (DL) Channel	SCC (DL) Freq. [MHz]	LTE Tx.Power with DL CA Enabled (dBm)	LTE Single Carrier Tx Power (dBm)
CA_41A-46A	LTE B41	5	41490	2680	QPSK	1	12	41490	2680	LTE B46	20	50665	5537.5	-	-	-	-	-	-	-	-	-	-	-	-	24.20	24.16
CA_41C (1)	LTE B41	5	41490	2680	QPSK	1	12	41490	2680	LTE B41	20	41373	2668.3	-	-	-	-	-	-	-	-	-	-	-	-	24.18	24.16
CA_41A-46C	LTE B41	5	41490	2680	QPSK	1	12	41490	2680	LTE B46	20	50665	5537.5	LTE B46	20	50467	5517.7	-	-	-	-	-	-	-	-	24.18	24.16
CA_41D	LTE B41	10	41490	2680	QPSK	1	25	41490	2680	LTE B41	20	41346	2665.6	LTE B41	20	41148	2645.8	-	-	-	-	-	-	-	-	24.18	24.10
CA_41A-46D	LTE B41	5	41490	2680	QPSK	1	12	41490	2680	LTE B46	20	50665	5537.5	LTE B46	20	50467	5517.7	LTE B46	20	50863	5557.3	-	-	-	-	24.18	24.16
CA_41A-46E	LTE B41	5	41490	2680	QPSK	1	12	41490	2680	LTE B46	20	50665	5537.5	LTE B46	20	50467	5517.7	LTE B46	20	50863	5557.3	LTE B48	20	51061	5577.1	24.17	24.16

H.2.8 LTE Band 48 as PCC

Table H-10
Maximum Output Powers

	PCC									SCC 1				SCC 2				SCC 3				SCC 4				Power	
Combination	PCC Band	PCC BW [MHz]	PCC (UL) Ch.	PCC (UL) Freq. [MHz]	Mod.	PCC UL# RB	PCC UL RB Offset	PCC (DL) Channel	PCC (DL) Freq. [MHz]	SCC Band	SCC BW [MHz]	SCC (DL) Channel	SCC (DL) Freq. [MHz]	SCC Band	SCC BW [MHz]	SCC (DL) Channel	SCC (DL) Freq. [MHz]	SCC Band	SCC BW [MHz]	SCC (DL) Channel	SCC (DL) Freq. [MHz]	SCC Band	SCC BW [MHz]	SCC (DL) Channel	SCC (DL) Freq. [MHz]	LTE Tx.Power with DL CA Enabled (dBm)	LTE Single Carrier Tx Power (dBm)
CA_48A-48A	LTE B48	5	56715	3697.5	QPSK	1	12	56715	3697.5	LTE B48	20	55340	3560	-	-	-	-	-	-	-	-	-	-	-	-	24.78	24.75
CA_48A-48C	LTE B48	5	56715	3697.5	QPSK	1	12	56715	3697.5	LTE B48	20	55340	3560	LTE B48	20	55538	3579.8	-	-	-	-	-	-	-	-	24.74	24.75
CA_48C-48A	LTE B48	5	56715	3697.5	QPSK	1	12	56715	3697.5	LTE B48	20	56598	3685.8	LTE B48	20	55340	3560	-	-	-	-	-	-	-	-	24.73	24.75
CA_48A-48D	LTE B48	5	56715	3697.5	QPSK	1	12	56715	3697.5	LTE B48	20	55340	3560	LTE B48	20	55538	3579.8	LTE B48	20	55736	3599.6	-	-	-	-	24.67	24.75
CA_48C-48C	LTE B48	5	56715	3697.5	QPSK	1	12	56715	3697.5	LTE B48	20	56598	3685.8	LTE B48	20	55340	3560	LTE B48	20	55538	3579.8	-	-	-	-	24.73	24.75
CA_48A-48E	LTE B48	5	56715	3697.5	QPSK	1	12	56715	3697.5	LTE B48	20	55340	3560	LTE B48	20	55538	3579.8	LTE B48	20	55736	3599.6	LTE B48	20	55934	3619.4	24.76	24.75
CA_48C-48D	LTE B48	5	56715	3697.5	QPSK	1	12	56715	3697.5	LTE B48	20	56598	3685.8	LTE B48	20	55340	3560	LTE B48	20	55538	3579.8	LTE B48	20	55736	3599.6	24.77	24.75

H.3 DL CA with DL 4x4 MIMO RF Conduction Powers

This device supports downlink 4x4 MIMO operations for some LTE bands. Uplink transmission is limited to a single output stream. When carrier aggregation was applicable, the general test selection and setup procedures described in Section H.1 were applied.

Per May 2017 TCB Workshop Notes, SAR for 4x4 DL MIMO was not needed since the maximum average output power in 4x4 DL MIMO mode was not more than 0.25 dB higher than the maximum output power with 4x4 DL MIMO inactive. Additionally, SAR for 4x4 MIMO Downlink Carrier Aggregation was not needed since the maximum average output power in 4x4 MIMO Downlink Carrier Aggregation mode was not more than 0.25 dB higher than the maximum output power with 4x4 MIMO Downlink and downlink carrier aggregation inactive.

H.3.1 LTE 4x4 MIMO DL Standalone Powers

Table H-11
Maximum Output Powers

LTE Band	Bandwidth [MHz]	Channel	Frequency [MHz]	Modulation	RB Size	RB Offset	4x4 DL MIMO Tx. Power [dBm]	Single Antenna Tx. Power [dBm]	Target Power [dBm]
5	3	20525	836.5	QPSK	1	7	24.10	24.14	24.0
66	10	132322	1745	QPSK	1	0	24.38	24.54	24.0
41	5	41490	2680	QPSK	1	12	24.13	24.16	24.0
48	5	56715	3697.5	QPSK	1	12	24.98	24.75	24.0

H.3.2 LTE Band 12 as PCC

Table H-12
Maximum Output Powers

	PCC										SCC 1					SCC 2					SCC 3					SCC 4					Power	
Combination	PCC Band	PCC BW [MHz]	PCC (UL) Ch.	PCC (UL) Freq. [MHz]	Mod.	PCC UL# RB	PCC UL RB Offset	PCC (DL) Ch.	PCC (DL) Freq. [MHz]	DL Ant. Config.	SCC Band	SCC BW [MHz]	SCC (DL) Ch.	SCC (DL) Freq. [MHz]	DL Ant. Config.	SCC Band	SCC BW [MHz]	SCC (DL) Ch.	SCC (DL) Freq. [MHz]	DL Ant. Config.	SCC Band	SCC BW [MHz]	SCC (DL) Ch.	SCC (DL) Freq. [MHz]	DL Ant. Config.	SCC Band	SCC BW [MHz]	SCC (DL) Ch.	SCC (DL) Freq. [MHz]	DL Ant. Config.	LTE Tx.Power with DL CA Enabled	LTE Single Carrier Tx Power (dBm)
CA_12A-(66A) (1)	LTE B12	10	23095	707.5	QPSK	1	0	5095	737.5	2x2	LTE B66	20	66786	2145	4x4	-	-	-	-	-	-	-	-	-	-	-	-	-	-	-	24.54	24.54
CA_12A-(66A) (2)	LTE B12	10	23095	707.5	QPSK	1	0	5095	737.5	2x2	LTE B66	20	66786	2145	4x4	-	-	-	-	-	-	-	-	-	-	-	-	-	-	-	24.54	24.54
CA_[2A]-12A (1)	LTE B12	10	23095	707.5	QPSK	1	0	5095	737.5	2x2	LTE B2	20	900	1960	4x4	-	-	-	-	-	-	-	-	-	-	-	-	-	-	-	24.51	24.54
CA_[4A]-12A (1)	LTE B12	10	23095	707.5	QPSK	1	0	5095	737.5	2x2	LTE B4	20	2175	2132.5	4x4	-	-	-	-	-	-	-	-	-	-	-	-	-	-	-	24.52	24.54
CA_[4A]-12A (2)	LTE B12	10	23095	707.5	QPSK	1	0	5095	737.5	2x2	LTE B4	20	2175	2132.5	4x4	-	-	-	-	-	-	-	-	-	-	-	-	-	-	-	24.52	24.54
CA_12B-(66A)	LTE B12	5	23155	713.5	QPSK	1	12	5155	743.5	2x2	LTE B12	10	5083	736.3	2x2	LTE B66	20	66786	2145	4x4	-	-	-	-	-	-	-	-	-	-	24.36	24.36
CA_[2A]-4A-12A	LTE B12	10	23095	707.5	QPSK	1	0	5095	737.5	2x2	LTE B2	20	900	1960	4x4	LTE B4	20	2175	2132.5	2x2	-	-	-	-	-	-	-	-	-	-	24.55	24.54
CA_2A-[4A]-12A	LTE B12	10	23095	707.5	QPSK	1	0	5095	737.5	2x2	LTE B2	20	900	1960	2x2	LTE B4	20	2175	2132.5	4x4	-	-	-	-	-	-	-	-	-	-	24.52	24.54
CA_[2A]-[4A]-12A	LTE B12	10	23095	707.5	QPSK	1	0	5095	737.5	2x2	LTE B2	20	900	1960	4x4	LTE B4	20	2175	2132.5	4x4	-	-	-	-	-	-	-	-	-	-	24.55	24.54
CA_[4A]-12A-30A	LTE B12	10	23095	707.5	QPSK	1	0	5095	737.5	2x2	LTE B4	20	2175	2132.5	4x4	LTE B30	10	9820	2355	2x2	-	-	-	-	-	-	-	-	-	-	24.54	24.54
CA_[4A]-12B	LTE B12	5	23155	713.5	QPSK	1	12	5155	743.5	2x2	LTE B12	10	5083	736.3	2x2	LTE B4	20	2175	2132.5	4x4	-	-	-	-	-	-	-	-	-	-	24.03	24.36
CA_[4A]-4A-12A	LTE B12	10	23095	707.5	QPSK	1	0	5095	737.5	2x2	LTE B4	20	2175	2132.5	4x4	LTE B4	10	2350	2150	2x2	-	-	-	-	-	-	-	-	-	-	24.52	24.54
CA_[4A]-[4A]-12A	LTE B12	10	23095	707.5	QPSK	1	0	5095	737.5	2x2	LTE B4	20	2175	2132.5	4x4	LTE B4	10	2350	2150	4x4	-	-	-	-	-	-	-	-	-	-	24.24	24.54
CA_[2A]-12A-66C	LTE B12	10	23095	707.5	QPSK	1	0	5095	737.5	2x2	LTE B2	20	900	1960	4x4	LTE B66	20	66786	2145	2x2	LTE B66	20	66984	2164.8	2x2	-	-	-	-	-	24.54	24.54
CA_2A-12A-[66C]	LTE B12	10	23095	707.5	QPSK	1	0	5095	737.5	2x2	LTE B2	20	900	1960	2x2	LTE B66	20	66786	2145	4x4	LTE B66	20	66984	2164.8	4x4	-	-	-	-	-	24.52	24.54
CA_[2A]-12A-[66C]	LTE B12	10	23095	707.5	QPSK	1	0	5095	737.5	2x2	LTE B2	20	900	1960	4x4	LTE B66	20	66786	2145	4x4	LTE B66	20	66984	2164.8	4x4	-	-	-	-	-	24.53	24.54
CA_[2A]-12A-30A-66A-66A	LTE B12	10	23095	707.5	QPSK	1	0	5095	737.5	2x2	LTE B2	20	900	1960	4x4	LTE B30	10	9820	2355	2x2	LTE B66	20	66786	2145	2x2	LTE B66	20	67236	2190	2x2	24.51	24.54
CA_2A-12A-30A-[66A]-66A	LTE B12	10	23095	707.5	QPSK	1	0	5095	737.5	2x2	LTE B2	20	900	1960	2x2	LTE B30	10	9820	2355	2x2	LTE B66	20	66786	2145	4x4	LTE B66	20	67236	2190	2x2	24.48	24.54
CA_[2A]-12A-30A-[66A]-66A	LTE B12	10	23095	707.5	QPSK	1	0	5095	737.5	2x2	LTE B2	20	900	1960	4x4	LTE B30	10	9820	2355	2x2	LTE B66	20	66786	2145	4x4	LTE B66	20	67236	2190	2x2	24.49	24.54
CA_2A-12A-30A-[66A]-[66A]	LTE B12	10	23095	707.5	QPSK	1	0	5095	737.5	2x2	LTE B2	20	900	1960	2x2	LTE B30	10	9820	2355	2x2	LTE B66	20	66786	2145	4x4	LTE B66	20	67236	2190	4x4	24.31	24.54
CA_[2A]-12A-30A-[66A]-[66A]	LTE B12	10	23095	707.5	QPSK	1	0	5095	737.5	2x2	LTE B2	20	900	1960	4x4	LTE B30	10	9820	2355	2x2	LTE B66	20	66786	2145	4x4	LTE B66	20	67236	2190	4x4	24.50	24.54
CA_[2A]-[2A]-12A-30A-66A	LTE B12	10	23095	707.5	QPSK	1	0	5095	737.5	2x2	LTE B2	20	900	1960	4x4	LTE B2	20	700	1940	2x2	LTE B30	10	9820	2355	2x2	LTE B66	20	66786	2145	2x2	24.47	24.54
CA_2A-2A-12A-30A-[66A]	LTE B12	10	23095	707.5	QPSK	1	0	5095	737.5	2x2	LTE B2	20	900	1960	2x2	LTE B2	20	700	1940	2x2	LTE B30	10	9820	2355	2x2	LTE B66	20	66786	2145	4x4	24.49	24.54
CA_[2A]-[2A]-12A-30A-66A	LTE B12	10	23095	707.5	QPSK	1	0	5095	737.5	2x2	LTE B2	20	900	1960	4x4	LTE B2	20	700	1940	4x4	LTE B30	10	9820	2355	2x2	LTE B66	20	66786	2145	2x2	24.48	24.54
CA_[2A]-2A-12A-30A-[66A]	LTE B12	10	23095	707.5	QPSK	1	0	5095	737.5	2x2	LTE B2	20	900	1960	4x4	LTE B2	20	700	1940	2x2	LTE B30	10	9820	2355	2x2	LTE B66	20	66786	2145	4x4	24.51	24.54
CA_[2A]-[2A]-12A-30A-[66A]	LTE B12	10	23095	707.5	QPSK	1	0	5095	737.5	2x2	LTE B2	20	900	1960	4x4	LTE B2	20	700	1940	4x4	LTE B30	10	9820	2355	2x2	LTE B66	20	66786	2145	4x4	24.50	24.54
CA_[2A]-2A-12A-66A-66A	LTE B12	10	23095	707.5	QPSK	1	0	5095	737.5	2x2	LTE B2	20	900	1960	4x4	LTE B2	20	700	1940	2x2	LTE B66	20	66786	2145	2x2	LTE B66	20	67236	2190	2x2	24.54	24.54
CA_2A-2A-12A-[66A]-66A	LTE B12	10	23095	707.5	QPSK	1	0	5095	737.5	2x2	LTE B2	20	900	1960	2x2	LTE B2	20	700	1940	2x2	LTE B66	20	66786	2145	4x4	LTE B66	20	67236	2190	2x2	24.54	24.54
CA_[2A]-[2A]-12A-66A-66A	LTE B12	10	23095	707.5	QPSK	1	0	5095	737.5	2x2	LTE B2	20	900	1960	4x4	LTE B2	20	700	1940	4x4	LTE B66	20	66786	2145	2x2	LTE B66	20	67236	2190	2x2	24.51	24.54
CA_[2A]-2A-12A-[66A]-66A	LTE B12	10	23095	707.5	QPSK	1	0	5095	737.5	2x2	LTE B2	20	900	1960	4x4	LTE B2	20	700	1940	2x2	LTE B66	20	66786	2145	4x4	LTE B66	20	67236	2190	2x2	24.52	24.54
CA_2A-2A-12A-[66A]-[66A]	LTE B12	10	23095	707.5	QPSK	1	0	5095	737.5	2x2	LTE B2	20	900	1960	2x2	LTE B2	20	700	1940	2x2	LTE B66	20	66786	2145	4x4	LTE B66	20	67236	2190	4x4	24.53	24.54
CA_[2A]-[2A]-12A-[66A]-66A	LTE B12	10	23095	707.5	QPSK	1	0	5095	737.5	2x2	LTE B2	20	900	1960	4x4	LTE B2	20	700	1940	4x4	LTE B66	20	66786	2145	2x2	LTE B66	20	67236	2190	2x2	24.51	24.54
CA_[2A]-2A-12A-[66A]-[66A]	LTE B12	10	23095	707.5	QPSK	1	0	5095	737.5	2x2	LTE B2	20	900	1960	4x4	LTE B2	20	700	1940	2x2	LTE B66	20	66786	2145	4x4	LTE B66	20	67236	2190	4x4	24.53	24.54
CA_[2A]-[2A]-12A-[66A]-[66A]	LTE B12	10	23095	707.5	QPSK	1	0	5095	737.5	2x2	LTE B2	20	900	1960	4x4	LTE B2	20	700	1940	4x4	LTE B66	20	66786	2145	4x4	LTE B66	20	67236	2190	4x4	24.53	24.54

H.3.3 LTE Band 13 as PCC

Table H-13
Maximum Output Powers

	PCC									SCC 1						SCC 2						SCC 3						SCC 4						SCC 5					Power	
Combination	PCC Band	PCC BW [MHz]	PCC (UL) Ch.	PCC (UL) Freq. [MHz]	Mod.	PCC UL# RB	PCC UL RB Offset	PCC (DL) Ch.	PCC (DL) Freq. [MHz]	DL Ant. Config.	SCC Band	SCC BW [MHz]	SCC (DL) Ch.	SCC (DL) Freq. [MHz]	DL Ant. Config.	SCC Band	SCC BW [MHz]	SCC (DL) Ch.	SCC (DL) Freq. [MHz]	DL Ant. Config.	SCC Band	SCC BW [MHz]	SCC (DL) Ch.	SCC (DL) Freq. [MHz]	DL Ant. Config.	SCC Band	SCC BW [MHz]	SCC (DL) Ch.	SCC (DL) Freq. [MHz]	DL Ant. Config.	SCC Band	SCC BW [MHz]	SCC (DL) Ch.	SCC (DL) Freq. [MHz]	DL Ant. Config.	LTE Tx.Power with DL CA Enabled	LTE Single Carrier Tx Power (dBm)
CA_13A-46A-[66A]	LTE B13	5	23230	782	QPSK	1	12	5230	751	2x2	LTE B46	20	50665	5537.5	2x2	LTE B66	20	66786	2145	4x4	-	-	-	-	-	-	-	-	-	-	-	-	-	-	-	-	-	23.85	24.08
CA_[2A]-13A-46A	LTE B13	5	23230	782	QPSK	1	12	5230	751	2x2	LTE B2	20	900	1960	4x4	LTE B46	20	50665	5537.5	2x2	-	-	-	-	-	-	-	-	-	-	-	-	-	-	-	-	-	23.86	24.08
CA_[2A]-4A-13A	LTE B13	10	23230	782	QPSK	1	0	5230	751	2x2	LTE B2	20	900	1960	4x4	LTE B4	20	2175	2132.5	2x2	-	-	-	-	-	-	-	-	-	-	-	-	-	-	-	-	-	24.08	24.05
CA_2A-[4A]-13A	LTE B13	10	23230	782	QPSK	1	0	5230	751	2x2	LTE B2	20	900	1960	2x2	LTE B4	20	2175	2132.5	4x4	-	-	-	-	-	-	-	-	-	-	-	-	-	-	-	-	-	24.07	24.05
CA_[2A]-[4A]-13A	LTE B13	10	23230	782	QPSK	1	0	5230	751	2x2	LTE B2	20	900	1960	4x4	LTE B4	20	2175	2132.5	4x4	-	-	-	-	-	-	-	-	-	-	-	-	-	-	-	-	-	24.04	24.05
CA_[4A]-4A-13A	LTE B13	10	23230	782	QPSK	1	0	5230	751	2x2	LTE B4	20	2175	2132.5	4x4	LTE B4	10	2350	2150	2x2	-	-	-	-	-	-	-	-	-	-	-	-	-	-	-	-	-	24.06	24.05
CA_[4A]-[4A]-13A	LTE B13	10	23230	782	QPSK	1	0	5230	751	2x2	LTE B4	20	2175	2132.5	4x4	LTE B4	10	2350	2150	4x4	-	-	-	-	-	-	-	-	-	-	-	-	-	-	-	-	-	24.05	24.05
CA_13A-46C-[66A]	LTE B13	5	23230	782	QPSK	1	12	5230	751	2x2	LTE B46	20	50665	5537.5	2x2	LTE B46	20	50467	5517.7	2x2	LTE B66	20	66786	2145	4x4	-	-	-	-	-	-	-	-	-	-	-	-	24.01	24.08
CA_13A-[46A]-66B	LTE B13	5	23230	782	QPSK	1	12	5230	751	2x2	LTE B46	20	55990	3625	4x4	LTE B66	15	66786	2145	2x2	LTE B66	5	66879	2154.3	2x2	-	-	-	-	-	-	-	-	-	-	-	-	23.83	24.08
CA_13A-46A-[66B]	LTE B13	5	23230	782	QPSK	1	12	5230	751	2x2	LTE B46	20	55990	3625	2x2	LTE B66	15	66786	2145	4x4	LTE B66	5	66879	2154.3	4x4	-	-	-	-	-	-	-	-	-	-	-	-	23.85	24.08
CA_13A-[46A]-[66B]	LTE B13	5	23230	782	QPSK	1	12	5230	751	2x2	LTE B46	20	55990	3625	4x4	LTE B66	15	66786	2145	4x4	LTE B66	5	66879	2154.3	4x4	-	-	-	-	-	-	-	-	-	-	-	-	23.84	24.08
CA_13A-46A-66C	LTE B13	5	23230	782	QPSK	1	12	5230	751	2x2	LTE B46	20	55990	3625	4x4	LTE B66	20	66786	2145	4x4	LTE B66	20	66984	2164.8	2x2	-	-	-	-	-	-	-	-	-	-	-	-	23.87	24.08
CA_13A-46A-[66C]	LTE B13	5	23230	782	QPSK	1	12	5230	751	2x2	LTE B46	20	55990	3625	4x4	LTE B66	20	66786	2145	4x4	LTE B66	20	66984	2164.8	4x4	-	-	-	-	-	-	-	-	-	-	-	-	23.86	24.08
CA_13A-[46A]-66C	LTE B13	5	23230	782	QPSK	1	12	5230	751	2x2	LTE B46	20	55990	3625	4x4	LTE B66	20	66786	2145	4x4	LTE B66	20	66984	2164.8	4x4	-	-	-	-	-	-	-	-	-	-	-	-	23.84	24.08
CA_13A-46B-[66A]	LTE B13	5	23230	782	QPSK	1	12	5230	751	2x2	LTE B46	20	50665	5537.5	2x2	LTE B46	20	50467	5517.7	2x2	LTE B66	20	66786	2145	4x4	-	-	-	-	-	-	-	-	-	-	-	-	23.87	24.08
CA_13A-[46A]-46C-66A	LTE B13	5	23230	782	QPSK	1	12	5230	751	2x2	LTE B46	20	55990	3625	4x4	LTE B46	20	55340	3560	2x2	LTE B46	20	55538	3579.8	2x2	LTE B66	20	66786	2145	2x2	-	-	-	-	-	-	-	23.83	24.08
CA_13A-46A-46C-66A	LTE B13	5	23230	782	QPSK	1	12	5230	751	2x2	LTE B46	20	55990	3625	2x2	LTE B46	20	55340	3560	4x4	LTE B46	20	55538	3579.8	4x4	LTE B66	20	66786	2145	2x2	-	-	-	-	-	-	-	23.84	24.08
CA_13A-46A-[46C]-66A	LTE B13	5	23230	782	QPSK	1	12	5230	751	2x2	LTE B46	20	55990	3625	4x4	LTE B46	20	55340	3560	2x2	LTE B46	20	55538	3579.8	2x2	LTE B66	20	66786	2145	4x4	-	-	-	-	-	-	-	23.85	24.08
CA_13A-[46A]-46C-66A	LTE B13	5	23230	782	QPSK	1	12	5230	751	2x2	LTE B46	20	55990	3625	4x4	LTE B46	20	55340	3560	4x4	LTE B46	20	55538	3579.8	4x4	LTE B66	20	66786	2145	4x4	-	-	-	-	-	-	-	23.84	24.08
CA_13A-46B-66A	LTE B13	5	23230	782	QPSK	1	12	5230	751	2x2	LTE B46	20	50665	5537.5	2x2	LTE B46	20	50467	5517.7	2x2	LTE B46	20	50863	5557.3	2x2	LTE B66	20	66786	2145	4x4	-	-	-	-	-	-	-	23.87	24.08
CA_13A-[46A]-46B-66A	LTE B13	5	23230	782	QPSK	1	12	5230	751	2x2	LTE B46	20	55990	3625	4x4	LTE B46	20	55340	3560	2x2	LTE B46	20	55538	3579.8	2x2	LTE B66	20	66786	2145	2x2	-	-	-	-	-	-	-	23.83	24.08
CA_13A-46A-46B-66A	LTE B13	5	23230	782	QPSK	1	12	5230	751	2x2	LTE B46	20	55990	3625	2x2	LTE B46	20	55340	3560	4x4	LTE B46	20	55538	3579.8	4x4	LTE B66	20	66786	2145	2x2	-	-	-	-	-	-	-	23.84	24.08
CA_13A-46A-[46B]-66A	LTE B13	5	23230	782	QPSK	1	12	5230	751	2x2	LTE B46	20	55990	3625	2x2	LTE B46	20	55340	3560	4x4	LTE B46	20	55538	3579.8	4x4	LTE B66	20	66786	2145	2x2	-	-	-	-	-	-	-	23.85	24.08
CA_13A-46A-[46B]-66A	LTE B13	5	23230	782	QPSK	1	12	5230	751	2x2	LTE B46	20	55990	3625	4x4	LTE B46	20	55340	3560	2x2	LTE B46	20	55538	3579.8	2x2	LTE B66	20	66786	2145	4x4	-	-	-	-	-	-	-	23.84	24.08
CA_13A-46A-[46B]-66A	LTE B13	5	23230	782	QPSK	1	12	5230	751	2x2	LTE B46	20	55990	3625	4x4	LTE B46	20	55340	3560	4x4	LTE B46	20	55538	3579.8	4x4	LTE B66	20	66786	2145	4x4	-	-	-	-	-	-	-	23.83	24.08
CA_13A-46B-66B	LTE B13	5	23230	782	QPSK	1	12	5230	751	2x2	LTE B46	20	50665	5537.5	2x2	LTE B46	20	50467	5517.7	2x2	LTE B46	20	50863	5557.3	2x2	LTE B66	20	66786	2145	4x4	-	-	-	-	-	-	-	23.87	24.08
CA_13A-[46B]-46C-66A	LTE B13	5	23230	782	QPSK	1	12	5230	751	2x2	LTE B46	20	55990	3625	4x4	LTE B46	20	55340	3560	2x2	LTE B46	20	55538	3579.8	2x2	LTE B66	20	66786	2145	2x2	-	-	-	-	-	-	-	23.83	24.08
CA_13A-46B-[46C]-66A	LTE B13	5	23230	782	QPSK	1	12	5230	751	2x2	LTE B46	20	55990	3625	2x2	LTE B46	20	55340	3560	4x4	LTE B46	20	55538	3579.8	4x4	LTE B66	20	66786	2145	4x4	-	-	-	-	-	-	-	23.85	24.08
CA_13A-46B-[46C]-66A	LTE B13	5	23230	782	QPSK	1	12	5230	751	2x2	LTE B46	20	55990	3625	2x2	LTE B46	20	55340	3560	2x2	LTE B46	20	55538	3579.8	2x2	LTE B66	20	66786	2145	4x4	-	-	-	-	-	-	-	23.84	24.08
CA_13A-46B-[46C]-66A	LTE B13	5	23230	782	QPSK	1	12	5230	751	2x2	LTE B46	20	55990	3625	2x2	LTE B46	20	55340	3560	4x4	LTE B46	20	55538	3579.8	4x4	LTE B66	20	66786	2145	4x4	-	-	-	-	-	-	-	23.83	24.08
CA_13A-[46B]-46C-66A	LTE B13	5	23230	782	QPSK	1	12	5230	751	2x2	LTE B46	20	55990	3625	4x4	LTE B46	20	55340	3560	2x2	LTE B46	20	55538	3579.8	2x2	LTE B66	20	66786	2145	4x4	-	-	-	-	-	-	-	23.85	24.08
CA_13A-[46B]-[46C]-66A	LTE B13	5	23230	782	QPSK	1	12	5230	751	2x2	LTE B46	20	55990	3625	4x4	LTE B46	20	55340	3560	4x4	LTE B46	20	55538	3579.8	4x4	LTE B66	20	66786	2145	4x4	-	-	-	-	-	-	-	23.84	24.08
CA_13A-46C-[66A]-66A	LTE B13	5	23230	782	QPSK	1	12	5230	751	2x2	LTE B46	20	55990	3625	2x2	LTE B46	20	55340	3560	2x2	LTE B46	20	55538	3579.8	2x2	LTE B66	20	66786	2145	4x4	-	-	-	-	-	-	-	23.83	24.08
CA_13A-46C-[66A]-[66A]	LTE B13	5	23230	782	QPSK	1	12	5230	751	2x2	LTE B46	20	55990	3625	2x2	LTE B46	20	55340	3560	4x4	LTE B46	20	55538	3579.8	4x4	LTE B66	20	66786	2145	4x4	-	-	-	-	-	-	-	23.85	24.08
CA_13A-46C-[66A]-66A	LTE B13	5	23230	782	QPSK	1	12	5230	751	2x2	LTE B46	20	55990	3625	4x4	LTE B46	20	55340	3560	2x2	LTE B46	20	55538	3579.8	2x2	LTE B66	20	66786	2145	4x4	-	-	-	-	-	-	-	23.84	24.08
CA_13A-46C-[66A]-[66A]	LTE B13	5	23230	782	QPSK	1	12	5230	751	2x2	LTE B46	20	55990	3625	4x4	LTE B46	20	55340	3560	4x4	LTE B46	20	55538	3579.8	4x4	LTE B66	20	66786	2145	4x4	-	-	-	-	-	-	-	23.83	24.08
CA_13A-46C-[66A]-66B	LTE B13	5	23230	782	QPSK	1	12	5230	751	2x2	LTE B46	20	50665	5537.5	2x2	LTE B46	20	50467	5517.7	2x2	LTE B46	20	50863	5557.3	2x2	LTE B66	20	66786	2145	4x4	-	-	-	-	-	-	-	23.85	24.08
CA_13A-46C-[66A]-[66B]	LTE B13	5	23230	782	QPSK	1	12	5230	751	2x2	LTE B46	20	55990	3625	4x4	LTE B46	20	55340	3560	2x2	LTE B46	20	55538	3579.8	2x2	LTE B66	20	66786	2145	4x4	-	-	-	-	-	-	-	23.84	24.08
CA_13A-46C-[66A]-66B	LTE B13	5	23230	782	QPSK	1	12	5230	751	2x2	LTE B46	20	55990	3625	4x4	LTE B46	20	55340	3560	4x4	LTE B46	20	55538	3579.8	4x4	LTE B66	20	66786	2145	4x4	-	-	-	-	-	-	-	23.83	24.08
CA_13A-46C-[66A]-[66B]	LTE B13	5	23230	782	QPSK	1	12	5230	751	2x2	LTE B46	20	55990	3625	2x2	LTE B46	20	55340	3560	2x2	LTE B46	20	55538	3579.8	2x2	LTE B66	20	66786	2145	4x4	-	-	-	-	-	-	-	23.85	24.08
CA_13A-46C-[66A]-[66B]	LTE B13	5	23230	782	QPSK	1	12	5230	751	2x2	LTE B46	20	55990	3625	2x2	LTE B46	20	55340	3560	4x4	LTE B46	20	55538	3579.8	4x4	LTE B66	20	66786	2145	4x4	-	-	-	-	-	-	-	23.84	24.08
CA_13A-46C-[66A]-66C	LTE B13	5	23230	782	QPSK	1	12	5230	751	2x2	LTE B46	20	55990	3625	4x4	LTE B46	20	55340	3560	2x2	LTE B46	20	55538	3579.8	2x2	LTE B66	20	66786	2145	4x4	-	-	-	-	-	-	-	23.83	24.08
CA_13A-46C-[66A]-[66C]	LTE B13	5	23230	782	QPSK	1	12	5230	751	2x2	LTE B46	20	55990	3625	4x4	LTE B46	20	55340	3560	4x4	LTE B46	20	55538	3579.8	4x4	LTE B66	20	66786	2145	4x4	-	-	-	-	-	-	-	23.85	24.08
CA_13A-46C-[66A]-66D	LTE B13	5	23230	782	QPSK	1	12	5230	751	2x2	LTE B46	20	55990	3625	2x2	LTE B46	20	55340	3560	2x2	LTE B46	20	55538	3579.8	2x2	LTE B66	20	66786	2145	4x4	-	-	-	-	-	-	-	23.84	24.08
CA_13A-46C-[66A]-[66D]	LTE B13	5	23230	782	QPSK	1	12	5230	751	2x2	LTE B46	20	55990	3625	2x2	LTE B46	20	55340	3560	4x4	LTE B46	20	55538	3579.8	4x4	LTE B66	20	66786	2145	4x4	-	-	-	-	-	-	-	23.83	24.08

H.3.4 LTE Band 71 as PCC

Table H-14
Maximum Output Powers

	PCC									SCC 1						SCC 2						SCC 3					Power	
Combination	PCC Band	PCC BW [MHz]	PCC (UL) Ch.	PCC (UL) Freq. [MHz]	Mod.	PCC UL# RB	PCC UL RB Offset	PCC (DL) Ch.	PCC (DL) Freq. [MHz]	DL Ant. Config.	SCC Band	SCC BW [MHz]	SCC (DL) Ch.	SCC (DL) Freq. [MHz]	DL Ant. Config.	SCC Band	SCC BW [MHz]	SCC (DL) Ch.	SCC (DL) Freq. [MHz]	DL Ant. Config.	SCC Band	SCC BW [MHz]	SCC (DL) Ch.	SCC (DL) Freq. [MHz]	DL Ant. Config.	LTE Tx.Power with DL CA Enabled	LTE Single Carrier Tx Power (dBm)
CA_[4A]-4A-71A	LTE B71	5	133297	680.5	QPSK	1	12	68761	634.5	2x2	LTE B4	20	2175	2132.5	4x4	LTE B4	10	2350	2150	2x2	-	-	-	-	-	24.33	24.37
CA_[4A]-[4A]-71A	LTE B71	5	133297	680.5	QPSK	1	12	68761	634.5	2x2	LTE B4	20	2175	2132.5	4x4	LTE B4	10	2350	2150	4x4	-	-	-	-	-	24.37	24.37
CA_[2A]-2A-4A-71A	LTE B71	5	133297	680.5	QPSK	1	12	68761	634.5	2x2	LTE B2	20	900	1960	4x4	LTE B2	20	700	1940	2x2	LTE B4	20	2175	2132.5	2x2	24.29	24.37
CA_2A-2A-[4A]-71A	LTE B71	5	133297	680.5	QPSK	1	12	68761	634.5	2x2	LTE B2	20	900	1960	2x2	LTE B2	20	700	1940	2x2	LTE B4	20	2175	2132.5	4x4	24.31	24.37
CA_[2A]-[2A]-4A-71A	LTE B71	5	133297	680.5	QPSK	1	12	68761	634.5	2x2	LTE B2	20	900	1960	4x4	LTE B2	20	700	1940	4x4	LTE B4	20	2175	2132.5	2x2	24.30	24.37
CA_[2A]-2A-[4A]-71A	LTE B71	5	133297	680.5	QPSK	1	12	68761	634.5	2x2	LTE B2	20	900	1960	4x4	LTE B2	20	700	1940	2x2	LTE B4	20	2175	2132.5	4x4	24.33	24.37
CA_[2A]-[2A]-[4A]-71A	LTE B71	5	133297	680.5	QPSK	1	12	68761	634.5	2x2	LTE B2	20	900	1960	4x4	LTE B2	20	700	1940	4x4	LTE B4	20	2175	2132.5	4x4	24.35	24.37
CA_[2A]-2A-66A-71A	LTE B71	5	133297	680.5	QPSK	1	12	68761	634.5	2x2	LTE B2	20	900	1960	4x4	LTE B2	20	700	1940	2x2	LTE B66	20	66786	2145	2x2	24.36	24.37
CA_2A-2A-[66A]-71A	LTE B71	5	133297	680.5	QPSK	1	12	68761	634.5	2x2	LTE B2	20	900	1960	2x2	LTE B2	20	700	1940	4x4	LTE B66	20	66786	2145	4x4	24.34	24.37
CA_[2A]-[2A]-[66A]-71A	LTE B71	5	133297	680.5	QPSK	1	12	68761	634.5	2x2	LTE B2	20	900	1960	4x4	LTE B2	20	700	1940	4x4	LTE B66	20	66786	2145	2x2	24.37	24.37
CA_[2A]-2A-[66A]-71A	LTE B71	5	133297	680.5	QPSK	1	12	68761	634.5	2x2	LTE B2	20	900	1960	4x4	LTE B2	20	700	1940	2x2	LTE B66	20	66786	2145	4x4	24.35	24.37
CA_[2A]-[2A]-[66A]-71A	LTE B71	5	133297	680.5	QPSK	1	12	68761	634.5	2x2	LTE B2	20	900	1960	4x4	LTE B2	20	700	1940	4x4	LTE B66	20	66786	2145	4x4	24.34	24.37
CA_[2A]-66A-66A-71A	LTE B71	5	133297	680.5	QPSK	1	12	68761	634.5	2x2	LTE B2	20	900	1960	4x4	LTE B66	20	66786	2145	2x2	LTE B66	20	67236	2190	2x2	24.33	24.37
CA_2A-[66A]-66A-71A	LTE B71	5	133297	680.5	QPSK	1	12	68761	634.5	2x2	LTE B2	20	900	1960	2x2	LTE B66	20	66786	2145	4x4	LTE B66	20	67236	2190	2x2	24.34	24.37
CA_[2A]-[66A]-66A-71A	LTE B71	5	133297	680.5	QPSK	1	12	68761	634.5	2x2	LTE B2	20	900	1960	4x4	LTE B66	20	66786	2145	4x4	LTE B66	20	67236	2190	2x2	24.32	24.37
CA_2A-[66A]-[66A]-71A	LTE B71	5	133297	680.5	QPSK	1	12	68761	634.5	2x2	LTE B2	20	900	1960	2x2	LTE B66	20	66786	2145	4x4	LTE B66	20	67236	2190	4x4	24.36	24.37
CA_[2A]-[66A]-[66A]-71A	LTE B71	5	133297	680.5	QPSK	1	12	68761	634.5	2x2	LTE B2	20	900	1960	4x4	LTE B66	20	66786	2145	4x4	LTE B66	20	67236	2190	4x4	24.38	24.37
CA_[2A]-66C-71A	LTE B71	5	133297	680.5	QPSK	1	12	68761	634.5	2x2	LTE B2	20	900	1960	4x4	LTE B66	20	66786	2145	2x2	LTE B66	20	66984	2164.8	2x2	24.35	24.37
CA_2A-[66C]-71A	LTE B71	5	133297	680.5	QPSK	1	12	68761	634.5	2x2	LTE B2	20	900	1960	2x2	LTE B66	20	66786	2145	4x4	LTE B66	20	66984	2164.8	4x4	24.36	24.37
CA_[2A]-[66C]-71A	LTE B71	5	133297	680.5	QPSK	1	12	68761	634.5	2x2	LTE B2	20	900	1960	4x4	LTE B66	20	66786	2145	4x4	LTE B66	20	66984	2164.8	4x4	24.37	24.37

H.3.5 LTE Band 5 as PCC

Table H-15
Maximum Output Powers

Combination	PCC Band	PCC BW (MHz)	PCC RB Offset	PCC DL Freq. (MHz)	Mod	PCC UL RB	PCC UL RB Offset	PCC UL Freq. (MHz)	PCC DL Freq. (MHz)	DL Ant. Config	SCC Band	SCC BW (MHz)	SCC RB Offset	SCC DL Freq. (MHz)	DL Ant. Config	SCC Band	SCC BW (MHz)	SCC RB Offset	SCC DL Freq. (MHz)	DL Ant. Config	SCC Band	SCC BW (MHz)	SCC RB Offset	SCC DL Freq. (MHz)	DL Ant. Config	SCC Band	SCC BW (MHz)	SCC DL Freq. (MHz)	DL Ant. Config	Power CD Tx Power with Backoff (dBm)	CD Single Carrier Tx Power (dBm)
CA_5(0) ABF-41	LTE 5A	5	20525	844.5	QPSK	1	0	20525	844.5	4x4	LTE 41A	20	39650	2593.5	4x4															24.5	24.5
CA_5(0) ACC-11	LTE 5A	5	20525	844.5	QPSK	1	0	20525	844.5	4x4																				24.5	24.5
CA_5(0)-66(0)-1	LTE 5A	5	20525	844.5	QPSK	1	0	20525	844.5	4x4																				24.5	24.5
CA_5(0)-66(0)-11	LTE 5A	5	20525	844.5	QPSK	1	0	20525	844.5	4x4																				24.5	24.5
CA_5(0)-71(0)-41	LTE 5A	5	20525	844.5	QPSK	1	0	20525	844.5	4x4	LTE 41A	20	40661	2683.5	4x4															24.5	24.5
CA_5(0)-71(0)-66(0)	LTE 5A	5	20525	844.5	QPSK	1	0	20525	844.5	4x4	LTE 66A	20	66661	2113.5	4x4															24.5	24.5
CA_5(0)-71(0)-66(0)-1	LTE 5A	5	20525	844.5	QPSK	1	0	20525	844.5	4x4	LTE 66A	20	66661	2113.5	4x4															24.5	24.5
CA_5(0)-71(0)-66(0)-11	LTE 5A	5	20525	844.5	QPSK	1	0	20525	844.5	4x4	LTE 66A	20	66661	2113.5	4x4															24.5	24.5
CA_5(0)-71(0)-41(0)	LTE 5A	5	20525	844.5	QPSK	1	0	20525	844.5	4x4	LTE 41A	20	40661	2683.5	4x4															24.5	24.5
CA_5(0)-71(0)-41(0)-1	LTE 5A	5	20525	844.5	QPSK	1	0	20525	844.5	4x4	LTE 41A	20	40661	2683.5	4x4															24.5	24.5
CA_5(0)-71(0)-41(0)-11	LTE 5A	5	20525	844.5	QPSK	1	0	20525	844.5	4x4	LTE 41A	20	40661	2683.5	4x4															24.5	24.5
CA_5(0)-66(0)-41	LTE 5A	5	20525	844.5	QPSK	1	0	20525	844.5	4x4	LTE 41A	20	39650	2593.5	4x4															24.5	24.5
CA_5(0)-66(0)-41(0)	LTE 5A	5	20525	844.5	QPSK	1	0	20525	844.5	4x4	LTE 41A	20	39650	2593.5	4x4															24.5	24.5
CA_5(0)-66(0)-41(0)-1	LTE 5A	5	20525	844.5	QPSK	1	0	20525	844.5	4x4	LTE 41A	20	39650	2593.5	4x4															24.5	24.5
CA_5(0)-66(0)-41(0)-11	LTE 5A	5	20525	844.5	QPSK	1	0	20525	844.5	4x4	LTE 41A	20	39650	2593.5	4x4															24.5	24.5
CA_5(0)-2(0)-41	LTE 5A	5	20525	844.5	QPSK	1	0	20525	844.5	4x4	LTE 41A	20	39750	2506	4x4	LTE 2A	20	1025	1932.5	4x4										24.5	24.5
CA_5(0)-2(0)-41(0)	LTE 5A	5	20525	844.5	QPSK	1	0	20525	844.5	4x4	LTE 41A	20	39750	2506	4x4	LTE 2A	20	1025	1932.5	4x4										24.5	24.5
CA_5(0)-2(0)-41(0)-1	LTE 5A	5	20525	844.5	QPSK	1	0	20525	844.5	4x4	LTE 41A	20	39750	2506	4x4	LTE 2A	20	1025	1932.5	4x4										24.5	24.5
CA_5(0)-2(0)-41(0)-11	LTE 5A	5	20525	844.5	QPSK	1	0	20525	844.5	4x4	LTE 41A	20	39750	2506	4x4	LTE 2A	20	1025	1932.5	4x4										24.5	24.5
CA_5(0)-2(0)-66(0)	LTE 5A	5	20525	844.5	QPSK	1	0	20525	844.5	4x4	LTE 66A	20	66750	2000	4x4	LTE 2A	20	1025	1932.5	4x4										24.5	24.5
CA_5(0)-2(0)-66(0)-1	LTE 5A	5	20525	844.5	QPSK	1	0	20525	844.5	4x4	LTE 66A	20	66750	2000	4x4	LTE 2A	20	1025	1932.5	4x4										24.5	24.5
CA_5(0)-2(0)-66(0)-11	LTE 5A	5	20525	844.5	QPSK	1	0	20525	844.5	4x4	LTE 66A	20	66750	2000	4x4	LTE 2A	20	1025	1932.5	4x4										24.5	24.5
CA_5(0)-2(0)-66(0)-41	LTE 5A	5	20525	844.5	QPSK	1	0	20525	844.5	4x4	LTE 66A	20	66750	2000	4x4	LTE 2A	20	1025	1932.5	4x4										24.5	24.5
CA_5(0)-2(0)-66(0)-41(0)	LTE 5A	5	20525	844.5	QPSK	1	0	20525	844.5	4x4	LTE 66A	20	66750	2000	4x4	LTE 2A	20	1025	1932.5	4x4										24.5	24.5
CA_5(0)-2(0)-66(0)-41(0)-1	LTE 5A	5	20525	844.5	QPSK	1	0	20525	844.5	4x4	LTE 66A	20	66750	2000	4x4	LTE 2A	20	1025	1932.5	4x4										24.5	24.5
CA_5(0)-2(0)-66(0)-41(0)-11	LTE 5A	5	20525	844.5	QPSK	1	0	20525	844.5	4x4	LTE 66A	20	66750	2000	4x4	LTE 2A	20	1025	1932.5	4x4										24.5	24.5
CA_5(0)-2(0)-71(0)	LTE 5A	5	20525	844.5	QPSK	1	0	20525	844.5	4x4	LTE 71A	20	68750	2506	4x4	LTE 2A	20	1025	1932.5	4x4										24.5	24.5
CA_5(0)-2(0)-71(0)-1	LTE 5A	5	20525	844.5	QPSK	1	0	20525	844.5	4x4	LTE 71A	20	68750	2506	4x4	LTE 2A	20	1025	1932.5	4x4										24.5	24.5
CA_5(0)-2(0)-71(0)-11	LTE 5A	5	20525	844.5	QPSK	1	0	20525	844.5	4x4	LTE 71A	20	68750	2506	4x4	LTE 2A	20	1025	1932.5	4x4										24.5	24.5
CA_5(0)-2(0)-71(0)-41	LTE 5A	5	20525	844.5	QPSK	1	0	20525	844.5	4x4	LTE 71A	20	68750	2506	4x4	LTE 2A	20	1025	1932.5	4x4										24.5	24.5
CA_5(0)-2(0)-71(0)-41(0)	LTE 5A	5	20525	844.5	QPSK	1	0	20525	844.5	4x4	LTE 71A	20	68750	2506	4x4	LTE 2A	20	1025	1932.5	4x4										24.5	24.5
CA_5(0)-2(0)-71(0)-41(0)-1	LTE 5A	5	20525	844.5	QPSK	1	0	20525	844.5	4x4	LTE 71A	20	68750	2506	4x4	LTE 2A	20	1025	1932.5	4x4										24.5	24.5
CA_5(0)-2(0)-71(0)-41(0)-11	LTE 5A	5	20525	844.5	QPSK	1	0	20525	844.5	4x4	LTE 71A	20	68750	2506	4x4	LTE 2A	20	1025	1932.5	4x4										24.5	24.5
CA_5(0)-4(0)-66(0)	LTE 5A	5	20525	844.5	QPSK	1	0	20525	844.5	4x4	LTE 66A	20	66750	2000	4x4	LTE 4A	20	1000	2000	4x4										24.5	24.5
CA_5(0)-4(0)-66(0)-1	LTE 5A	5	20525	844.5	QPSK	1	0	20525	844.5	4x4	LTE 66A	20	66750	2000	4x4	LTE 4A	20	1000	2000	4x4										24.5	24.5
CA_5(0)-4(0)-66(0)-11	LTE 5A	5	20525	844.5	QPSK	1	0	20525	844.5	4x4	LTE 66A	20	66750	2000	4x4	LTE 4A	20	1000	2000	4x4										24.5	24.5
CA_5(0)-4(0)-66(0)-41	LTE 5A	5	20525	844.5	QPSK	1	0	20525	844.5	4x4	LTE 66A	20	66750	2000	4x4	LTE 4A	20	1000	2000	4x4										24.5	24.5
CA_5(0)-4(0)-66(0)-41(0)	LTE 5A	5	20525	844.5	QPSK	1	0	20525	844.5	4x4	LTE 66A	20	66750	2000	4x4	LTE 4A	20	1000	2000	4x4										24.5	24.5
CA_5(0)-4(0)-66(0)-41(0)-1	LTE 5A	5	20525	844.5	QPSK	1	0	20525	844.5	4x4	LTE 66A	20	66750	2000	4x4	LTE 4A	20	1000	2000	4x4										24.5	24.5
CA_5(0)-4(0)-66(0)-41(0)-11	LTE 5A	5	20525	844.5	QPSK	1	0	20525	844.5	4x4	LTE 66A	20	66750	2000	4x4	LTE 4A	20	1000	2000	4x4										24.5	24.5
CA_5(0)-4(0)-71(0)	LTE 5A	5	20525	844.5	QPSK	1	0	20525	844.5	4x4	LTE 71A	20	68750	2506	4x4	LTE 4A	20	1000	2000	4x4										24.5	24.5
CA_5(0)-4(0)-71(0)-1	LTE 5A	5	20525	844.5	QPSK	1	0	20525	844.5	4x4	LTE 71A	20	68750	2506	4x4	LTE 4A	20	1000	2000	4x4										24.5	24.5
CA_5(0)-4(0)-71(0)-11	LTE 5A	5	20525	844.5	QPSK	1	0	20525	844.5	4x4	LTE 71A	20	68750	2506	4x4	LTE 4A	20	1000	2000	4x4										24.5	24.5
CA_5(0)-4(0)-71(0)-41	LTE 5A	5	20525	844.5	QPSK	1	0	20525	844.5	4x4	LTE 71A	20	68750	2506	4x4	LTE 4A	20	1000	2000	4x4										24.5	24.5
CA_5(0)-4(0)-71(0)-41(0)	LTE 5A	5	20525	844.5	QPSK	1	0	20525	844.5	4x4	LTE 71A	20	68750	2506	4x4	LTE 4A	20	1000	2000	4x4										24.5	24.5
CA_5(0)-4(0)-71(0)-41(0)-1	LTE 5A	5	20525	844.5	QPSK	1	0	20525	844.5	4x4	LTE 71A	20	68750	2506	4x4	LTE 4A	20	1000	2000	4x4										24.5	24.5
CA_5(0)-4(0)-71(0)-41(0)-11	LTE 5A	5	20525	844.5	QPSK	1	0	20525	844.5	4x4	LTE 71A	20	68750	2506	4x4	LTE 4A	20	1000	2000	4x4										24.5	24.5
CA_5(0)-5(0)-66(0)	LTE 5A	5	20525	844.5	QPSK	1	0	20525	844.5	4x4	LTE 66A	20	66750	2000	4x4	LTE 5A	10	20450	882.5	4x4										24.5	24.5
CA_5(0)-5(0)-66(0)-1	LTE 5A	5	20525	844.5	QPSK	1	0	20525	844.5	4x4	LTE 66A	20	66750	2000	4x4	LTE 5A	10	20450	882.5	4x4										24.5	24.5
CA_5(0)-5(0)-66(0)-11	LTE 5A	5	20525	844.5	QPSK	1	0	20525	844.5	4x4	LTE 66A	20	66750	2000	4x4	LTE 5A	10	20450	882.5	4x4										24.5	24.5
CA_5(0)-5(0)-66(0)-41	LTE 5A	5	20525	844.5	QPSK	1	0	20525	844.5	4x4	LTE 66A	20	66750	2000	4x4	LTE 5A	10	20450	882.5	4x4										24.5	24.5
CA_5(0)-5(0)-66(0)-41(0)	LTE 5A	5	20525	844.5	QPSK	1	0	20525	844.5	4x4	LTE 66A	20	66750	2000	4x4	LTE 5A	10	20450	882.5	4x4										24.5	24.5
CA_5(0)-5(0)-66(0)-41(0)-1	LTE 5A	5	20525	844.5	QPSK	1	0	20525	844.5	4x4	LTE 66A	20	66750	2000	4x4	LTE 5A	10	20450	882.5	4x4										24.5	24.5
CA_5(0)-5(0)-66(0)-41(0)-11	LTE 5A	5	20525	844.5	QPSK	1	0	20525	844.5	4x4	LTE 66A	20	66750	2000	4x4	LTE 5A	10	20450	882.5	4x4										24.5	24.5
CA_5(0)-5(0)-71(0)	LTE 5A	5	20525	844.5	QPSK	1	0	20525	844.5	4x4	LTE 71A	20	68750	2506	4x4	LTE 5A	10	20450	882.5	4x4										24.5	24.5
CA_5(0)-5(0)-71(0)-1	LTE 5A	5	20525	844.5	QPSK	1	0	20525	844.5	4x4	LTE 71A	20	68750	2506	4x4	LTE 5A	10	20450	882.5	4x4										24.5	24.5
CA_5(0)-5(0)-71(0)-11	LTE 5A	5	20525	844.5	QPSK	1	0	20525	844.5	4x4	LTE 71A	20	68750	2506	4x4	LTE 5A	10	20450	882.5	4x4										24.5	24.5
CA_5(0)-5(0)-71(0)-41	LTE 5A	5	20525	844.5	QPSK	1	0	20525	844.5	4x4	LTE 71A	20	68750	2506	4x4	LTE 5A	10	20450	882.5	4x4										24.5	24.5
CA_5(0)-5(0)-71(0)-41(0)	LTE 5A	5	20525	844.5	QPSK	1	0	20525	844.5	4x4	LTE 71A	20	68750	2506	4x4	LTE 5A	10	20450	882.5	4x4										24.5	24.5
CA_5(0)-5(0)-71(0)-41(0)-1	LTE 5A	5	20525	844.5	QPSK	1	0	20525	844.5	4x4	LTE 71A	20	68750	2506	4x4	LTE 5A	10	20450	882.5	4x4										24.5	24.5
CA_5(0)-5(0)-71(0)-41(0)-11	LTE 5A	5	20525	844.5	QPSK	1	0	20525	844.5	4x4	LTE 71A	20	68750	2506	4x4	LTE 5A	10	20450	882.5	4x4										24.5	24.5
CA_5(0)-12(0)-66(0)	LTE 5A	5	20525	844.5	QPSK	1	0	20525	844.5	4x4	LTE 66A	20	66750	2000	4x4	LTE 12A	10	23060	737.5	4x4										24.5	24.5
CA_5(0)-12(0)-66(0)-1	LTE 5A	5	20525	844.5	QPSK	1	0	20525	844.5	4x4	LTE 66A	20	66750	2000	4x4	LTE 12A	10	23060	737.5	4x4										24.5	24.5
CA_5(0)-12(0)-66(0)-11	LTE 5A	5	20525	844.5	QPSK	1	0	20525	844.5	4x4	LTE 66A	20	66750	2000	4x4	LTE 12A	10	23060	737.5	4x4										24.5	24.5
CA_5(0)-12(0)-66(0)-41	LTE 5A	5	20525	844.5	QPSK	1	0	20525	844.5	4x4	LTE 66A	20	66750	2000	4x4	LTE 12A	10	23060	737.5	4x4										24.5	24.5
CA_5(0)-12(0)-66(0)-41(0)	LTE 5A	5	20525	844.5	QPSK	1	0	20525	844.5	4x4	LTE 66A	20	66750	2000	4x4	LTE 12A	10	23060	737.5	4x4										24.5	24.5
CA_5(0)-12(0)-66(0)-41(0)-1	LTE 5A	5	20525	844.5	QPSK	1	0	20525	844.5	4x4	LTE 66A	20	66750	2000	4x4	LTE 12A	10	23060	737.5	4x4										24.5	24.5
CA_5(0)-12(0)-66(0)-41(0)-11	LTE 5A	5	20525	844.5	QPSK	1	0	20525	844.5	4x4	LTE 66A	20	66750	2000	4x4	LTE 12A	10	23060	737.5	4x4										24.5	24.5
CA_5(0)-12(0)-71(0)	LTE 5A	5	20525	844.5	QPSK	1	0	20525	844.5	4x4	LTE 71A	20	68750	2506	4x4	LTE 12A	10	23060	737.5	4x4										24.5	24.5
CA_5(0)-12(0)-71(0)-1	LTE 5A	5	20525	844.5	QPSK	1	0	20525	844.5	4x4	LTE 71A	20	68750	2506	4x4	LTE 12A	10	23060	737.5	4x4										24.5	24.5
CA_5(0)-12(0)-71(0)-11	LTE 5A	5	20525	844.5	QPSK	1	0	20525	844.5	4x4	LTE 71A	20	68750	2506	4x4	LTE 12A	10	23060	737.5	4x4										24.5	24.5
CA_5(0)-12(0)-71(0)-41	LTE 5A	5	20525	844.5	QPSK	1	0	20525	844.5	4x4	LTE 71A	20	68750	2506	4x4	LTE 12A	10	23060	737.5	4x4										24.5	24.5
CA_5(0)-12(0)-71(0)-41(0)	LTE 5A	5	20525	844.5	QPSK	1	0	20525	844.5	4x4	LTE 71A	20	68750	2506	4x4	LTE 12A	10	23060	737.5	4x4										24.5	24.5
CA_5(0)-12(0)-71(0)-41(0)-1	LTE 5A	5	20525	844.5	QPSK	1	0	20525	844.5	4x4	LTE 71A	20	68750	2506	4x4	LTE 12A	10	23060	737.5	4x4										24.5	24.5
CA_5(0)-12(0)-71(0)-41(0)-11	LTE 5A	5	20525	844.5	QPSK	1	0	20525	844.5	4x4	LTE 71A	20	68750	2506	4x4	LTE 12A	10	23060	737.5	4x4										24.5	24.5
CA_5(0)-13(0)-66(0)	LTE 5A	5	20525	844.5	QPSK	1	0	20525	844.5	4x4	LTE 66A	20	66750	2000	4x4	LTE 13A	10	23230	781.5	4x4										24.5	24.5
CA_5(0)-13(0)-66(0)-1	LTE 5A	5	20525	844.5	QPSK	1	0	20525	844.5	4x4	LTE 66A	20	66750	2000	4x4	LTE 13A	10	23230	781.5	4x4										24.5	24.5
CA_5(0)-13(0)-66(0)-11	LTE 5A	5	20525	844.5	QPSK	1	0	20525	844.5	4x4	LTE 66A	20	66750	2000	4x4	LTE 13A	10	23230	781.5	4x4										24.5	24.5
CA_5(0)-13(0)-66(0)-41	LTE 5A	5	20525	844.5	QPSK	1	0	20525	844.5	4x4	LTE 66A	20	66750	2000	4x4	LTE 13A	10	23230	781.5	4x4										24.5	24.5
CA_5(0)-13(0)-66(0)-41(0)	LTE 5A	5	20525	844.5	QPSK	1	0	20525	844.5	4x4	LTE 66A	20	66750	2000	4x4	LTE 13A	10	23230	781.5	4x4										24.5	24.5
CA_5(0)-13(0)-66(0)-41(0)-1	LTE 5A	5	20525	844.5	QPSK	1	0	20525	844.5	4x4	LTE 66A	20	66750	2000	4x4	LTE 13A	10	23230	781.5	4x4										24.5	24.5
CA_5(0)-13(0)-66(0)-41(0)-11	LTE 5A	5	20525	844.5	QPSK	1	0	20525	844.5	4x4	LTE 66A	20	66750	2000	4x4	LTE 13A	10	23230	781.5	4x4										24.5	24.5
CA_5(0)-13(0)-71(0)	LTE 5A	5	20525	844.5	QPSK	1	0	20525	844.5	4x4	LTE 71A	20	68750	2506	4x4	LTE 13A	10	23230	781.5	4x4										24.5	24.5
CA_5(0)-13(0)-71(0)-1	LTE 5A	5	20525	844.5	QPSK	1	0	20525	844.5	4x4	LTE 71A	20	68750	2506	4x4	LTE 13A	10	23230	781.5	4x4										24.5	24.5
CA_5(0)-13(0)-71(0)-11	LTE 5A	5	20525	844.5	QPSK	1	0	20525	844.5	4x4	LTE 71A	20	68750	2506	4x4	LTE 13A	10	23230	781.5	4x4										24.5	24.5
CA_5(0)-13(0)-71(0)-41	LTE 5A	5	20525	844.5	QPSK	1	0	20525	844.5	4x4	LTE 71A	20	68750	2506	4x4	LTE 13A	10	23230	781.5	4x4										24.5	24.5
CA_5(0)-13(0)-71(0)-41(0)	LTE 5A	5	20525	844.5	QPSK	1	0	20525	844.5	4x4	LTE 71A	20	68750	2506	4x4	LTE 13A	10	23230	781.5	4x4										24.5	24.5
CA_5(0)-13(0)-71(0)-41(0)-1	LTE 5A	5	20525	844.5	QPSK	1	0	20525	844.5	4x4	LTE 71A	20	68750	2506	4x4	LTE 13A	10	23230	781.5	4x4										24.5	24.5
CA_5(0)-13(0)-71(0)-41(0)-11	LTE 5A	5	20525	844.5	QPSK	1	0	20525	844.5	4x4	LTE 71A	20	68750	2506	4x4	LTE 13A	10	23230	781.5	4x4										24.5	24.5
CA_5(0)-14(0)-66(0)	LTE 5A	5	20525	844.5	QPSK	1	0	20525	844.5	4x4	LTE 66A	20	66750	2000	4x4	LTE 14A	10	23330	793.5	4x4										24.5	24.5
CA_5(0)-14(0)-66(0)-1	LTE 5A	5	20525	844.5	QPSK	1	0	20525	844.5	4x4	LTE 66A	20	66750	2000	4x4	LTE 14A	10	23330	793.5	4x4										24.5	24.5
CA_5(0)-14(0)-66(0)-11	LTE 5A	5	20525	844.5	QPSK	1	0	20525	844.5	4x4	LTE 66A	20	66750	2000	4x4	LTE 14A	10	23330	793.5	4x4										24.5	24.5
CA_5(0)-14(0)-66(0)-41	LTE 5A	5	20525	844.5	QPSK	1	0	20525	844.5	4x4	LTE 66A	20	66750	2000	4x4	LTE 14A	10	23330	793.5	4x4										24.5	24.5
CA_5(0)-14(0)-66(0)-41(0)	LTE 5A	5	20525	844.5	QPSK	1	0	20525	844.5	4x4	LTE 66A	20	66750	2000	4x4	LTE 14A	10	23330	793.5	4x4										24.5	24.5
CA_5(0)-14(0)-66(0)-41(0)-1	LTE 5A	5	20525	844.5	QPSK	1	0	20525	844.5	4x4	LTE 66A	20	66750	2000	4x4	LTE 14A	10	23330	793.5	4x4										24.5	24.5
CA_5(0)-14(0)-66(0)-41(0)-11	LTE 5A	5	20525	844.5	QPSK	1	0	20525	844.5	4x4	LTE 66A	20	66750	2000	4x4	LTE 14A	10	23330	793.5	4x4										24.5	24.5
CA_5(0)-14(0)-71(0)	LTE 5A	5	20525	844.5	QPSK	1	0	20525	844.5	4x4	LTE 71A	20	68750	2506	4x4	LTE 14A	10	23330	793.5	4x4										24.5	24.5
CA_5(0)-14(0)-71(0)-1	LTE 5A	5	20525	844.5	QPSK	1	0	20525	844.5	4x4	LTE 71A	20	68750	2506	4x4	LTE 14A	10	23330	793.5	4x4										24.5	24.5
CA_5(0)-14(0)-71(0)-11	LTE 5A	5	20525	844.5	QPSK	1	0	20525	844.5	4x4	LTE 71A	20	68750	2506	4x4	LTE 14A	10	23330	793.5	4x4										24.5	24.5
CA_5(0)-14(0)-71(0)-41	LTE 5A	5	20525	844.5	QPSK	1	0	20525	844.5	4x4	LTE 71A	20	68750	2506	4x4	LTE 14A	10	23330	793.5	4x4										24.5	24.5
CA_5(0)-14(0)-71(0)-41(0)	LTE 5A	5	20525	844.5	QPSK	1	0	20525	844.5	4x4	LTE 71A	20	68750	2506	4x4	LTE 14A	10	23330	793.5	4x4										24.5	24.5
CA_5(0)-14(0)-71(0)-41(0)-1	LTE 5A	5	20525	844.5	QPSK	1	0	20525	844.5	4x4	LTE 71A	20	68750	2506	4x4	LTE 14A	10	23330	793.5	4x4										24.5	24.5
CA_5(0)-14(0)-71(0)-41(0)-11	LTE 5A	5	20525	844.5	QPSK	1	0	20525	844.5	4x4	LTE 71A	20	68750	2506	4x4	LTE 14A	10	23330	793.5	4x4										24.5	24.5
CA_5(0)-30(0)-66(0)	LTE 5A	5	20525	844.5	QPSK	1	0	20525	844.5	4x4	LTE 66A	20	66750	2000	4x4	LTE 30A	10	23790	2352.5	4x4	LTE 66A	20	66750	2000	4x4					24.5	24.5
CA_5(0)-30(0)-66(0)-1	LTE 5A	5	20525	844.5	QPSK	1	0	20525	844.5	4x4	LTE 66A	20	66750	2000	4x4	LTE 30A	10	23790	2352.5	4x4	LTE 66A	20	66750

H.3.6 LTE Band 66 as PCC

Table H-16
Maximum Output Powers

	PCC										SCC 1					SCC 2					SCC 3					Power	
Combination	PCC Band	PCC BW [MHz]	PCC (UL) Ch.	PCC (UL) Freq. [MHz]	Mod.	PCC UL# RB	PCC UL RB Offset	PCC (DL) Ch.	PCC (DL) Freq. [MHz]	DL Ant. Config.	SCC Band	SCC BW [MHz]	SCC (DL) Ch.	SCC (DL) Freq. [MHz]	DL Ant. Config.	SCC Band	SCC BW [MHz]	SCC (DL) Ch.	SCC (DL) Freq. [MHz]	DL Ant. Config.	SCC Band	SCC BW [MHz]	SCC (DL) Ch.	SCC (DL) Freq. [MHz]	DL Ant. Config.	LTE Tx.Power with DL CA Enabled (dBm)	LTE Single Carrier Tx Power (dBm)
CA_12A-[66A] (1)	LTE B66	10	132322	1745	QPSK	1	0	66786	2145	4x4	LTE B12	10	5095	737.5	2x2	-	-	-	-	-	-	-	-	-	-	24.43	24.54
CA_12A-[66A] (2)	LTE B66	10	132322	1745	QPSK	1	0	66786	2145	4x4	LTE B12	10	5095	737.5	2x2	-	-	-	-	-	-	-	-	-	-	24.43	24.54
CA_12B-[66A]	LTE B66	10	132322	1745	QPSK	1	0	66786	2145	4x4	LTE B12	5	5095	737.5	2x2	LTE B12	5	5047	732.7	2x2	-	-	-	-	-	24.44	24.54
CA_13A-46A-[66A]	LTE B66	10	132322	1745	QPSK	1	0	66786	2145	4x4	LTE B13	10	5230	751	2x2	LTE B46	20	50665	5537.5	2x2	-	-	-	-	-	24.39	24.54
CA_46A-[48A]-66A	LTE B66	10	132322	1745	QPSK	1	0	66786	2145	2x2	LTE B46	20	50665	5537.5	2x2	LTE B48	20	55990	3625	4x4	-	-	-	-	-	24.43	24.54
CA_46A-48A-[66A]	LTE B66	10	132322	1745	QPSK	1	0	66786	2145	4x4	LTE B46	20	50665	5537.5	2x2	LTE B48	20	55990	3625	2x2	-	-	-	-	-	24.43	24.54
CA_46A-[48A]-[66A]	LTE B66	10	132322	1745	QPSK	1	0	66786	2145	4x4	LTE B46	20	50665	5537.5	2x2	LTE B48	20	55990	3625	4x4	-	-	-	-	-	24.45	24.54
CA_46A-[66A]-66A	LTE B66	10	132322	1745	QPSK	1	0	66786	2145	4x4	LTE B66	20	67236	2190	2x2	LTE B46	20	50665	5537.5	2x2	-	-	-	-	-	24.40	24.54
CA_46A-66A-[66A]	LTE B66	10	132322	1745	QPSK	1	0	66786	2145	2x2	LTE B66	20	67236	2190	4x4	LTE B46	20	50665	5537.5	2x2	-	-	-	-	-	24.45	24.54
CA_46A-[66A]-[66A]	LTE B66	10	132322	1745	QPSK	1	0	66786	2145	4x4	LTE B66	20	67236	2190	4x4	LTE B46	20	50665	5537.5	2x2	-	-	-	-	-	24.43	24.54
CA_46A-[66C]	LTE B66	10	132322	1745	QPSK	1	0	66786	2145	4x4	LTE B66	20	66642	2130.6	4x4	LTE B46	20	50665	5537.5	2x2	-	-	-	-	-	24.41	24.54
CA_[5A]-46A-66A	LTE B66	10	132322	1745	QPSK	1	0	66786	2145	2x2	LTE B5	10	2525	881.5	4x4	LTE B46	20	50665	5537.5	2x2	-	-	-	-	-	24.42	24.54
CA_5A-46A-[66A]	LTE B66	10	132322	1745	QPSK	1	0	66786	2145	4x4	LTE B5	10	2525	881.5	2x2	LTE B46	20	50665	5537.5	2x2	-	-	-	-	-	24.47	24.54
CA_[5A]-46A-[66A]	LTE B66	10	132322	1745	QPSK	1	0	66786	2145	4x4	LTE B5	10	2525	881.5	4x4	LTE B46	20	50665	5537.5	2x2	-	-	-	-	-	24.48	24.54
CA_[66D]	LTE B66	10	132322	1745	QPSK	1	0	66786	2145	4x4	LTE B66	20	66642	2130.6	4x4	LTE B66	20	66498	2116.2	4x4	-	-	-	-	-	24.43	24.54
CA_13A-46C-[66A]	LTE B66	10	132322	1745	QPSK	1	0	66786	2145	4x4	LTE B13	10	5230	751	2x2	LTE B46	20	50665	5537.5	2x2	LTE B46	20	50467	5517.7	2x2	24.47	24.54
CA_13A-[48A]-66B	LTE B66	10	132322	1745	QPSK	1	0	66786	2145	2x2	LTE B66	10	66687	2135.1	2x2	LTE B13	10	5230	751	2x2	LTE B48	20	55990	3625	4x4	24.45	24.54
CA_13A-48A-[66B]	LTE B66	10	132322	1745	QPSK	1	0	66786	2145	4x4	LTE B66	10	66687	2135.1	4x4	LTE B13	10	5230	751	2x2	LTE B48	20	55990	3625	2x2	24.43	24.54
CA_13A-[48A]-[66B]	LTE B66	10	132322	1745	QPSK	1	0	66786	2145	4x4	LTE B66	10	66687	2135.1	4x4	LTE B13	10	5230	751	2x2	LTE B48	20	55990	3625	4x4	24.41	24.54
CA_13A-[48A]-66C	LTE B66	10	132322	1745	QPSK	1	0	66786	2145	2x2	LTE B66	20	66642	2130.6	2x2	LTE B13	10	5230	751	2x2	LTE B48	20	55990	3625	4x4	24.41	24.54
CA_13A-48A-[66C]	LTE B66	10	132322	1745	QPSK	1	0	66786	2145	4x4	LTE B66	20	66642	2130.6	4x4	LTE B13	10	5230	751	2x2	LTE B48	20	55990	3625	2x2	24.40	24.54
CA_13A-[48A]-[66C]	LTE B66	10	132322	1745	QPSK	1	0	66786	2145	4x4	LTE B66	20	66642	2130.6	4x4	LTE B13	10	5230	751	2x2	LTE B48	20	55990	3625	4x4	24.39	24.54
CA_29A-30A-[66A]-66A	LTE B66	10	132322	1745	QPSK	1	0	66786	2145	4x4	LTE B66	20	67236	2190	2x2	LTE B29	10	9715	722.5	2x2	LTE B30	10	9820	2355	2x2	24.45	24.54
CA_29A-30A-66A-[66A]	LTE B66	10	132322	1745	QPSK	1	0	66786	2145	2x2	LTE B66	20	67236	2190	4x4	LTE B29	10	9715	722.5	2x2	LTE B30	10	9820	2355	2x2	24.42	24.54
CA_29A-30A-[66A]-[66A]	LTE B66	10	132322	1745	QPSK	1	0	66786	2145	4x4	LTE B66	20	67236	2190	4x4	LTE B29	10	9715	722.5	2x2	LTE B30	10	9820	2355	2x2	24.46	24.54
CA_[2A]-12A-66C	LTE B66	10	132322	1745	QPSK	1	0	66786	2145	2x2	LTE B66	20	66642	2130.6	2x2	LTE B2	20	900	1960	4x4	LTE B12	10	5095	737.5	2x2	24.46	24.54
CA_2A-12A-[66C]	LTE B66	10	132322	1745	QPSK	1	0	66786	2145	4x4	LTE B66	20	66642	2130.6	4x4	LTE B2	20	900	1960	2x2	LTE B12	10	5095	737.5	2x2	24.43	24.54
CA_[2A]-12A-[66C]	LTE B66	10	132322	1745	QPSK	1	0	66786	2145	4x4	LTE B66	20	66642	2130.6	4x4	LTE B2	20	900	1960	4x4	LTE B12	10	5095	737.5	2x2	24.44	24.54
CA_[2A]-13A-66B	LTE B66	10	132322	1745	QPSK	1	0	66786	2145	2x2	LTE B66	10	66687	2135.1	2x2	LTE B2	20	900	1960	4x4	LTE B13	10	5230	751	2x2	24.44	24.54
CA_2A-13A-[66B]	LTE B66	10	132322	1745	QPSK	1	0	66786	2145	4x4	LTE B66	10	66687	2135.1	4x4	LTE B2	20	900	1960	2x2	LTE B13	10	5230	751	2x2	24.42	24.54
CA_[2A]-13A-[66B]	LTE B66	10	132322	1745	QPSK	1	0	66786	2145	4x4	LTE B66	10	66687	2135.1	4x4	LTE B2	20	900	1960	4x4	LTE B13	10	5230	751	2x2	24.45	24.54
CA_[2A]-13A-66C	LTE B66	10	132322	1745	QPSK	1	0	66786	2145	2x2	LTE B66	20	66642	2130.6	2x2	LTE B2	20	900	1960	4x4	LTE B13	10	5230	751	2x2	24.48	24.54
CA_2A-13A-[66C]	LTE B66	10	132322	1745	QPSK	1	0	66786	2145	4x4	LTE B66	20	66642	2130.6	4x4	LTE B2	20	900	1960	2x2	LTE B13	10	5230	751	2x2	24.42	24.54
CA_[2A]-13A-[66C]	LTE B66	10	132322	1745	QPSK	1	0	66786	2145	4x4	LTE B66	20	66642	2130.6	4x4	LTE B2	20	900	1960	4x4	LTE B13	10	5230	751	2x2	24.43	24.54
CA_[2A]-29A-30A-66A	LTE B66	10	132322	1745	QPSK	1	0	66786	2145	2x2	LTE B2	20	900	1960	4x4	LTE B29	10	9715	722.5	2x2	LTE B30	10	9820	2355	2x2	24.43	24.54
CA_2A-29A-30A-[66A]	LTE B66	10	132322	1745	QPSK	1	0	66786	2145	4x4	LTE B2	20	900	1960	2x2	LTE B29	10	9715	722.5	2x2	LTE B30	10	9820	2355	2x2	24.42	24.54
CA_[2A]-29A-30A-[66A]	LTE B66	10	132322	1745	QPSK	1	0	66786	2145	4x4	LTE B2	20	900	1960	4x4	LTE B29	10	9715	722.5	2x2	LTE B30	10	9820	2355	2x2	24.41	24.54
CA_[2A]-2A-66A-71A	LTE B66	10	132322	1745	QPSK	1	0	66786	2145	2x2	LTE B2	20	900	1960	4x4	LTE B2	20	700	1940	2x2	LTE B71	20	68761	634.5	2x2	24.47	24.54
CA_2A-2A-[66A]-71A	LTE B66	10	132322	1745	QPSK	1	0	66786	2145	4x4	LTE B2	20	900	1960	2x2	LTE B2	20	700	1940	2x2	LTE B71	20	68761	634.5	2x2	24.42	24.54
CA_[2A]-[2A]-66A-71A	LTE B66	10	132322	1745	QPSK	1	0	66786	2145	2x2	LTE B2	20	900	1960	4x4	LTE B2	20	700	1940	4x4	LTE B71	20	68761	634.5	2x2	24.44	24.54
CA_[2A]-2A-[66A]-71A	LTE B66	10	132322	1745	QPSK	1	0	66786	2145	4x4	LTE B2	20	900	1960	4x4	LTE B2	20	700	1940	2x2	LTE B71	20	68761	634.5	2x2	24.40	24.54
CA_[2A]-[2A]-[66A]-71A	LTE B66	10	132322	1745	QPSK	1	0	66786	2145	4x4	LTE B2	20	900	1960	4x4	LTE B2	20	700	1940	4x4	LTE B71	20	68761	634.5	2x2	24.43	24.54
CA_[2A]-46A-46A-66A	LTE B66	10	132322	1745	QPSK	1	0	66786	2145	2x2	LTE B2	20	900	1960	4x4	LTE B46	20	50665	5537.5	2x2	LTE B46	20	47090	5180	2x2	24.47	24.54
CA_2A-46A-46A-[66A]	LTE B66	10	132322	1745	QPSK	1	0	66786	2145	4x4	LTE B2	20	900	1960	2x2	LTE B46	20	50665	5537.5	2x2	LTE B46	20	47090	5180	2x2	24.41	24.54
CA_[2A]-46A-46A-[66A]	LTE B66	10	132322	1745	QPSK	1	0	66786	2145	4x4	LTE B2	20	900	1960	4x4	LTE B46	20	50665	5537.5	2x2	LTE B46	20	47090	5180	2x2	24.42	24.54
CA_[2A]-5A-48A-66A	LTE B66	10	132322	1745	QPSK	1	0	66786	2145	2x2	LTE B2	20	900	1960	4x4	LTE B5	10	2525	881.5	2x2	LTE B48	20	55990	3625	2x2	24.46	24.54
CA_2A-[5A]-48A-66A	LTE B66	10	132322	1745	QPSK	1	0	66786	2145	2x2	LTE B2	20	900	1960	2x2	LTE B5	10	2525	881.5	4x4	LTE B48	20	55990	3625	2x2	24.45	24.54
CA_2A-5A-[48A]-66A	LTE B66	10	132322	1745	QPSK	1	0	66786	2145	2x2	LTE B2	20	900	1960	2x2	LTE B5	10	2525	881.5	2x2	LTE B48	20	55990	3625	4x4	24.48	24.54
CA_2A-5A-48A-[66A]	LTE B66	10	132322	1745	QPSK	1	0	66786	2145	4x4	LTE B2	20	900	1960	2x2	LTE B5	10	2525	881.5	2x2	LTE B48	20	55990	3625	2x2	24.40	24.54
CA_[2A]-[5A]-48A-66A	LTE B66	10	132322	1745	QPSK	1	0	66786	2145	2x2	LTE B2	20	900	1960	4x4	LTE B5	10	2525	881.5	4x4	LTE B48	20	55990	3625	2x2	24.46	24.54
CA_[2A]-5A-[48A]-66A	LTE B66	10	132322	1745	QPSK	1	0	66786	2145	2x2	LTE B2	20	900	1960	4x4	LTE B5	10	2525	881.5	2x2	LTE B48	20	55990	3625	4x4	24.47	24.54
CA_[2A]-5A-48A-[66A]	LTE B66	10	132322	1745	QPSK	1	0	66786	2145	4x4	LTE B2	20	900	1960	4x4	LTE B5	10	2525	881.5	2x2	LTE B48	20	55990	3625	2x2	24.43	24.54
CA_2A-[5A]-[48A]-66A	LTE B66	10	132322	1745	QPSK	1	0	66786	2145	2x2	LTE B2	20	900	1960	2x2	LTE B5	10	2525	881.5	4x4	LTE B48	20	55990	3625	4x4	24.45	24.54
CA_2A-[5A]-48A-[66A]	LTE B66	10	132322	1745	QPSK	1	0	66786	2145	4x4	LTE B2	20	900	1960	2x2	LTE B5	10	2525	881.5	4x4	LTE B48	20	55990	3625	2x2	24.44	24.54
CA_2A-5A-[48A]-[66A]	LTE B66	10	132322	1745	QPSK	1	0	66786	2145	4x4	LTE B2	20	900	1960	2x2	LTE B5	10	2525	881.5	2x2	LTE B48	20	55990	3625	4x4	24.42	24.54
CA_[2A]-[5A]-[48A]-66A	LTE B66	10	132322	1745	QPSK	1	0	66786	2145	2x2	LTE B2	20	900	1960	4x4	LTE B5	10	2525	881.5	4x4	LTE B48	20	55990	3625	4x4	24.45	24.54
CA_[2A]-[5A]-48A-[66A]	LTE B66	10	132322	1745	QPSK	1	0	66786	2145	4x4	LTE B2	20	900	1960	4x4	LTE B5	10	2525	881.5	4x4	LTE B48	20	55990	3625	2x2	24.41	24.54
CA_[2A]-5A-[48A]-[66A]	LTE B66	10	132322	1745	QPSK	1	0	66786	2145	4x4	LTE B2	20	900	1960	4x4	LTE B5	10	2525	881.5	2x2	LTE B48	20	55990	3625	4x4	24.43	24.54
CA_2A-[5A]-[48A]-[66A]	LTE B66	10	132322	1745	QPSK	1	0	66786	2145	4x4	LTE B2	20	900	1960	2x2	LTE B5	10	2525	881.5	4x4	LTE B48	20	55990	3625	4x4	24.41	24.54
CA_[2A]-[5A]-[48A]-[66A]	LTE B66	10	132322	1745	QPSK	1	0	66786	2145	4x4	LTE B2	20	900	1960	4x4	LTE B5	10	2525	881.5	4x4	LTE B48	20	55990	3625	4x4	24.45	24.54
CA_[2A]-66A-66A-66A	LTE B66	10	132322	1745	QPSK	1	0	66786	2145	2x2	LTE B66	20	66536	2120	2x2	LTE B66	20	67236	2190	2x2	LTE B2	20	900	1960	4x4	24.49	24.54
CA_2A-[66A]-66A-66A	LTE B66	10	132322	1745	QPSK	1	0	66786	2145	4x4	LTE B66	20	66536	2120	2x2	LTE B66	20	67236	2190	2x2	LTE B2	20	900	1960	2x2	24.43	24.54
CA_2A-66A-[66A]-66A	LTE B66	10	132322	1745	QPSK	1	0	66786	2145	2x2	LTE B66	20	66536	2120	4x4	LTE B66	20	67236	2190	2x2	LTE B2	20	900	1960	2x2	24.50	24.54
CA_[2A]-[66A]-66A-66A	LTE B66	10	132322	1745	QPSK	1	0	66786	2145	4x4	LTE B66	20	66536	2120	2x2	LTE B66	20	67236	2190	2x2	LTE B2	20	900	1960	4x4	24.42	24.54
CA_[2A]-66A-[66A]-66A	LTE B66	10	132322	1745	QPSK	1	0	66786	2145	2x2	LTE B66	20	66536	2120	4x4	LTE B66	20	67236	2190	2x2	LTE B2	20	900	1960	4x4	24.44	24.54
CA_2A-[66A]-[66A]-66A	LTE B66	10	132322	1745	QPSK	1	0	66786	2145	4x4	LTE B66	20	66536	2120	2x2	LTE B66	20	67236	2190	4x4	LTE B2	20	900	1960	2x2	24.44	24.54
CA_2A-66A-[66A]-[66A]	LTE B66	10	132322	1745	QPSK	1	0	66786	2145	2x2	LTE B66	20	66536	2120	4x4	LTE B66	20	67236	2190	4x4	LTE B2	20	900	1960	2x2	24.45	24.54
CA_[2A]-[66A]-[66A]-66A	LTE B66	10	132322	1745	QPSK	1	0	66786	2145	4x4	LTE B66	20	66536	2120	2x2	LTE B66	20	67236	2190	4x4	LTE B2	20	900	1960	4x4	24.40	24.54
CA_[2A]-66A-[66A]-[66A]	LTE B66	10	132322	1745	QPSK	1	0	66786	2145	2x2	LTE B66	20	66536	2120	4x4	LTE B66	20	67236	2190	4x4	LTE B2	20	900	1960	4x4	24.44	24.54
CA_2A-[66A]-[66A]-[66A]	LTE B66	10	132322	1745	QPSK	1	0	66786	2145	4x4	LTE B66	20	66536	2120	4x4	LTE B66	20	67236	2190	4x4	LTE B2	20	900	1960	2x2	24.43	24.54
CA_[2A]-[66A]-[66A]-[66A]	LTE B66	10	132322	1745	QPSK	1	0	66786	2145	4x4	LTE B66	20	66536	2120	4x4	LTE B66	20	67236	2190	4x4	LTE B2	20	900	1960	4x4	24.45	24.54
CA_[2A]-66A-66A-71A	LTE B66	10	132322	1745	QPSK	1	0	66786	2145	2x2	LTE B66	20	67236	2190	2x2	LTE B2	20	900	1960	4x4	LTE B71	20	68761	634.5	2x2	24.43	24.54
CA_2A-66A-[66A]-71A	LTE B66	10	132322	1745	QPSK	1	0	66786	2145	2x2	LTE B66	20	67236	2190	4x4	LTE B2	20	900	1960	2x2	LTE B71	20	68761	634.5	2x2	24.45	24.54
CA_2A-[66A]-66A-71A	LTE B66	10	132322	1745	QPSK	1	0	66786	2145	4x4	LTE B66	20	67236	2190	2x2	LTE B2	20	900	1960	2x2	LTE B71	20	68761	634.5	2x2	24.45	24.54
CA_[2A]-66A-[66A]-71A	LTE B66	10	132322	1745	QPSK	1	0	66786	2145	2x2	LTE B66	20	67236	2190	4x4	LTE B2	20	900	1960	4x4	LTE B71	20	68761	634.5	2x2	24.44	24.54
CA_[2A]-[66A]-66A-71A	LTE B66	10	132322	1745	QPSK	1	0	66786	2145	4x4	LTE B66	20	67236	2190	2x2	LTE B2	20	900	1960	4x4	LTE B71	20	68761	634.5	2x2	24.43	24.54
CA_2A-[66A]-[66A]-71A	LTE B66	10	132322	1745	QPSK	1	0	66786	2145	4x4	LTE B66	20	67236	2190	4x4	LTE B2	20	900	1960	2x2	LTE B71	20	68761	634.5	2x2	24.44	24.54
CA_[2A]-[66A]-[66A]-71A	LTE B66	10	132322	1745	QPSK	1	0	66786	2145	4x4	LTE B66	20	67236	2190	4x4	LTE B2	20	900	1960	4x4	LTE B71	20	68761	634.5	2x2	24.47	24.54
CA_[2A]-66C-71A	LTE B66	10	132322	1745	QPSK	1	0	66786	2145	2x2	LTE B66	20	66642	2130.6	2x2	LTE B2	20	900	1960	4x4	LTE B71	20	68761	634.5	2x2	24.43	24.54
CA_2A-[66C]-71A	LTE B66	10	132322	1745	QPSK	1	0	66786	2145	4x4	LTE B66	20	66642	2130.6	4x4	LTE B2	20	900	1960	2x2	LTE B71	20	68761	634.5	2x2	24.43	24.54
CA_[2A]-[66C]-71A	LTE B66	10	132322	1745	QPSK	1	0	66786	2145	4x4	LTE B66	20	66642	2130.6	4x4	LTE B2	20	900	1960	4x4	LTE B71	20	68761	634.5	2x2	24.46	24.54
CA_[2C]-66A-66A	LTE B66	10	132322	1745	QPSK	1	0	66786	2145	2x2	LTE B66	20	67236	2190	2x2	LTE B2	20	900	1960	4x4	LTE B2	20	702	1940.2	4x4	24.46	24.54
CA_2C-66A-[66A]	LTE B66	10	132322	1745	QPSK	1	0	66786	2145	2x2	LTE B66	20	67236	2190	4x4	LTE B2	20	900	1960	2x2	LTE B2	20	702	1940.2	2x2	24.46	24.54
CA_2C-[66A]-66A	LTE B66	10	132322	1745	QPSK	1	0	66786	2145	4x4	LTE B66	20	67236	2190	2x2	LTE B2	20	900	1960	2x2	LTE B2	20	702	1940.2	2x2	24.43	24.54
CA_[2C]-66A-[66A]	LTE B66	10	132322	1745	QPSK	1	0	66786	2145	2x2	LTE B66	20	67236	2190	4x4	LTE B2	20	900	1960	4x4	LTE B2	20	702	1940.2	4x4	24.46	24.54
CA_[2C]-[66A]-66A	LTE B66	10	132322	1745	QPSK	1	0	66786	2145	4x4	LTE B66	20	67236	2190	2x2	LTE B2	20	900	1960	4x4	LTE B2	20	702	1940.2	4x4	24.42	24.54
CA_2C-[66A]-[66A]	LTE B66	10	132322	1745	QPSK	1	0	66786	2145	4x4	LTE B66	20	67236	2190	4x4	LTE B2	20	900	1960	2x2	LTE B2	20	702	1940.2	2x2	24.45	24.54
CA_[2C]-[66A]-[66A]	LTE B66	10	132322	1745	QPSK	1	0	66786	2145	4x4	LTE B66	20	67236	2190	4x4	LTE B2	20	900	1960	4x4	LTE B2	20	702	1940.2	4x4	24.44	24.54
CA_46A-[48C]-66A	LTE B66	10	132322	1745	QPSK	1	0	66786	2145	2x2	LTE B46	20	50665	5537.5	2x2	LTE B48	20	55990	3625	4x4	LTE B48	20	56188	3644.8	4x4	24.41	24.54
CA_46A-48C-[66A]	LTE B66	10	132322	1745	QPSK	1	0	66786	2145	4x4	LTE B46	20	50665	5537.5	2x2	LTE B48	20	55990	3625	2x2	LTE B48	20	56188	3644.8	2x2	24.44	24.54
CA_46A-[48C]-[66A]	LTE B66	10	132322	1745	QPSK	1	0	66786	2145	4x4	LTE B46	20	50665	5537.5	2x2	LTE B48	20	55990	3625	4x4	LTE B48	20	56188	3644.8	4x4	24.43	24.54
CA_46C-[48A]-66A	LTE B66	10	132322	1745	QPSK	1	0	66786	2145	2x2	LTE B46	20	50665	5537.5	2x2	LTE B46	20	50467	5517.7	2x2	LTE B48	20	55990	3625	4x4	24.43	24.54
CA_46C-48A-[66A]	LTE B66	10	132322	1745	QPSK	1	0	66786	2145	4x4	LTE B46	20	50665	5537.5	2x2	LTE B46	20	50467	5517.7	2x2	LTE B48	20	55990	3625	2x2	24.46	24.54
CA_46C-[48A]-[66A]	LTE B66	10	132322	1745	QPSK	1	0	66786	2145	4x4	LTE B46	20	50665	5537.5	2x2	LTE B46	20	50467	5517.7	2x2	LTE B48	20	55990	3625	4x4	24.40	24.54
CA_46C-66A-[66A]	LTE B66	10	132322	1745	QPSK	1	0	66786	2145	2x2	LTE B66	20	67236	2190	4x4	LTE B46	20	50665	5537.5	2x2	LTE B46	20	50467	5517.7	2x2	24.45	24.54
CA_46C-[66A]-66A	LTE B66	10	132322	1745	QPSK	1	0	66786	2145	4x4	LTE B66	20	67236	2190	2x2	LTE B46	20	50665	5537.5	2x2	LTE B46	20	50467	5517.7	2x2	24.45	24.54
CA_46C-[66A]-[66A]	LTE B66	10	132322	1745	QPSK	1	0	66786	2145	4x4	LTE B66	20	67236	2190	4x4	LTE B46	20	50665	5537.5	2x2	LTE B46	20	50467	5517.7	2x2	24.47	24.54
CA_[48A]-48A-66A-66A	LTE B66	10	132322	1745	QPSK	1	0	66786	2145	2x2	LTE B66	20	67236	2190	2x2	LTE B48	20	55990	3625	4x4	LTE B48	20	55340	3560	2x2	24.42	24.54
CA_48A-48A-66A-[66A]	LTE B66	10	132322	1745	QPSK	1	0	66786	2145	2x2	LTE B66	20	67236	2190	4x4	LTE B48	20	55990	3625	2x2	LTE B48	20	55340	3560	2x2	24.43	24.54
CA_48A-48A-[66A]-66A	LTE B66	10	132322	1745	QPSK	1	0	66786	2145	4x4	LTE B66	20	67236	2190	2x2	LTE B48	20	55990	3625	2x2	LTE B48	20	55340	3560	2x2	24.45	24.54
CA_[48A]-[48A]-66A-66A	LTE B66	10	132322	1745	QPSK	1	0	66786	2145	2x2	LTE B66	20	67236	2190	2x2	LTE B48	20	55990	3625	4x4	LTE B48	20	55340	3560	4x4	24.45	24.54
CA_[48A]-48A-66A-[66A]	LTE B66	10	132322	1745	QPSK	1	0	66786	2145	2x2	LTE B66	20	67236	2190	4x4	LTE B48	20	55990	3625	4x4	LTE B48	20	55340	3560	2x2	24.43	24.54
CA_[48A]-48A-[66A]-66A	LTE B66	10	132322	1745	QPSK	1	0	66786	2145	4x4	LTE B66	20	67236	2190	2x2	LTE B48	20	55990	3625	4x4	LTE B48	20	55340	3560	2x2	24.43	24.54
CA_48A-48A-[66A]-[66A]	LTE B66	10	132322	1745	QPSK	1	0	66786	2145	4x4	LTE B66	20	67236	2190	4x4	LTE B48	20	55990	3625	2x2	LTE B48	20	55340	3560	2x2	24.43	24.54
CA_[48A]-[48A]-66A-[66A]	LTE B66	10	132322	1745	QPSK	1	0	66786	2145	2x2	LTE B66	20	67236	2190	4x4	LTE B48	20	55990	3625	4x4	LTE B48	20	55340	3560	4x4	24.42	24.54
CA_[48A]-[48A]-[66A]-66A	LTE B66	10	132322	1745	QPSK	1	0	66786	2145	4x4	LTE B66	20	67236	2190	2x2	LTE B48	20	55990	3625	4x4	LTE B48	20	55340	3560	4x4	24.42	24.54
CA_[48A]-48A-[66A]-[66A]	LTE B66	10	132322	1745	QPSK	1	0	66786	2145	4x4	LTE B66	20	67236	2190	4x4	LTE B48	20	55990	3625	4x4	LTE B48	20	55340	3560	2x2	24.45	24.54
CA_[48A]-[48A]-[66A]-[66A]	LTE B66	10	132322	1745	QPSK	1	0	66786	2145	4x4	LTE B66	20	67236	2190	4x4	LTE B48	20	55990	3625	4x4	LTE B48	20	55340	3560	4x4	24.42	24.54
CA_[48A]-48A-66B	LTE B66	10	132322	1745	QPSK	1	0	66786	2145	2x2	LTE B66	10	66687	2135.1	2x2	LTE B48	20	55990	3625	4x4	LTE B48	20	55340	3560	2x2	24.43	24.54
CA_48A-48A-[66B]	LTE B66	10	132322	1745	QPSK	1	0	66786	2145	4x4	LTE B66	10	66687	2135.1	4x4	LTE B48	20	55990	3625	2x2	LTE B48	20	55340	3560	2x2	24.40	24.54
CA_[48A]-[48A]-66B	LTE B66	10	132322	1745	QPSK	1	0	66786	2145	2x2	LTE B66	10	66687	2135.1	2x2	LTE B48	20	55990	3625	4x4	LTE B48	20	55340	3560	4x4	24.45	24.54
CA_[48A]-48A-[66B]	LTE B66	10	132322	1745	QPSK	1	0	66786	2145	4x4	LTE B66	10	66687	2135.1	4x4	LTE B48	20	55990	3625	4x4	LTE B48	20	55340	3560	2x2	24.42	24.54
CA_[48A]-[48A]-[66B]	LTE B66	10	132322	1745	QPSK	1	0	66786	2145	4x4	LTE B66	10	66687	2135.1	4x4	LTE B48	20	55990	3625	4x4	LTE B48	20	55340	3560	4x4	24.43	24.54
CA_[48A]-48A-66C	LTE B66	10	132322	1745	QPSK	1	0	66786	2145	2x2	LTE B66	20	66642	2130.6	2x2	LTE B48	20	55990	3625	4x4	LTE B48	20	55340	3560	2x2	24.43	24.54
CA_48A-48A-[66C]	LTE B66	10	132322	1745	QPSK	1	0	66786	2145	4x4	LTE B66	20	66642	2130.6	4x4	LTE B48	20	55990	3625	2x2	LTE B48	20	55340	3560	2x2	24.46	24.54
CA_[48A]-[48A]-66C	LTE B66	10	132322	1745	QPSK	1	0	66786	2145	2x2	LTE B66	20	66642	2130.6	2x2	LTE B48	20	55990	3625	4x4	LTE B48	20	55340	3560	4x4	24.42	24.54
CA_[48A]-48A-[66C]	LTE B66	10	132322	1745	QPSK	1	0	66786	2145	4x4	LTE B66	20	66642	2130.6	4x4	LTE B48	20	55990	3625	4x4	LTE B48	20	55340	3560	2x2	24.45	24.54
CA_[48A]-[48A]-[66C]	LTE B66	10	132322	1745	QPSK	1	0	66786	2145	4x4	LTE B66	20	66642	2130.6	4x4	LTE B48	20	55990	3625	4x4	LTE B48	20	55340	3560	4x4	24.41	24.54
CA_[48C]-[66A]-[66A]	LTE B66	10	132322	1745	QPSK	1	0	66786	2145	4x4	LTE B66	20	67236	2190	4x4	LTE B48	20	55990	3625	4x4	LTE B48	20	56188	3644.8	4x4	24.42	24.54
CA_[5A]-46C-66A	LTE B66	10	132322	1745	QPSK	1	0	66786	2145	2x2	LTE B5	10	2525	881.5	4x4	LTE B46	20	50665	5537.5	2x2	LTE B46	20	50467	5517.7	2x2	24.45	24.54
CA_5A-46C-[66A]	LTE B66	10	132322	1745	QPSK	1	0	66786	2145	4x4	LTE B5	10	2525	881.5	2x2	LTE B46	20	50665	5537.5	2x2	LTE B46	20	50467	5517.7	2x2	24.42	24.54
CA_[5A]-46C-[66A]	LTE B66	10	132322	1745	QPSK	1	0	66786	2145	4x4	LTE B5	10	2525	881.5	4x4	LTE B46	20	50665	5537.5	2x2	LTE B46	20	50467	5517.7	2x2	24.45	24.54
CA_[5A]-5A-66A-66A	LTE B66	10	132322	1745	QPSK	1	0	66786	2145	2x2	LTE B66	20	67236	2190	2x2	LTE B5	10	2525	881.5	4x4	LTE B5	5	2425	871.5	2x2	24.46	24.54
CA_5A-5A-[66A]-66A	LTE B66	10	132322	1745	QPSK	1	0	66786	2145	4x4	LTE B66	20	67236	2190	2x2	LTE B5	10	2525	881.5	2x2	LTE B5	5	2425	871.5	2x2	24.45	24.54
CA_5A-5A-66A-[66A]	LTE B66	10	132322	1745	QPSK	1	0	66786	2145	2x2	LTE B66	20	67236	2190	4x4	LTE B5	10	2525	881.5	2x2	LTE B5	5	2425	871.5	2x2	24.44	24.54
CA_[5A]-[5A]-66A-66A	LTE B66	10	132322	1745	QPSK	1	0	66786	2145	2x2	LTE B66	20	67236	2190	2x2	LTE B5	10	2525	881.5	4x4	LTE B5	5	2425	871.5	4x4	24.45	24.54
CA_[5A]-5A-[66A]-66A	LTE B66	10	132322	1745	QPSK	1	0	66786	2145	4x4	LTE B66	20	67236	2190	2x2	LTE B5	10	2525	881.5	4x4	LTE B5	5	2425	871.5	2x2	24.46	24.54
CA_[5A]-5A-66A-[66A]	LTE B66	10	132322	1745	QPSK	1	0	66786	2145	2x2	LTE B66	20	67236	2190	4x4	LTE B5	10	2525	881.5	4x4	LTE B5	5	2425	871.5	2x2	24.47	24.54
CA_5A-5A-[66A]-[66A]	LTE B66	10	132322	1745	QPSK	1	0	66786	2145	4x4	LTE B66	20	67236	2190	4x4	LTE B5	10	2525	881.5	2x2	LTE B5	5	2425	871.5	2x2	24.40	24.54
CA_[5A]-[5A]-[66A]-66A	LTE B66	10	132322	1745	QPSK	1	0	66786	2145	4x4	LTE B66	20	67236	2190	2x2	LTE B5	10	2525	881.5	4x4	LTE B5	5	2425	871.5	4x4	24.44	24.54
CA_[5A]-[5A]-66A-[66A]	LTE B66	10	132322	1745	QPSK	1	0	66786	2145	2x2	LTE B66	20	67236	2190	4x4	LTE B5	10	2525	881.5	4x4	LTE B5	5	2425	871.5	4x4	24.48	24.54
CA_[5A]-5A-[66A]-[66A]	LTE B66	10	132322	1745	QPSK	1	0	66786	2145	4x4	LTE B66	20	67236	2190	4x4	LTE B5	10	2525	881.5	4x4	LTE B5	5	2425	871.5	2x2	24.41	24.54
CA_[5A]-[5A]-[66A]-[66A]	LTE B66	10	132322	1745	QPSK	1	0	66786	2145	4x4	LTE B66	20	67236	2190	4x4	LTE B5	10	2525	881.5	4x4	LTE B5	5	2425	871.5	4x4	24.44	24.54
CA_[5A]-5A-66B	LTE B66	10	132322	1745	QPSK	1	0	66786	2145	2x2	LTE B66	10	66687	2135.1	2x2	LTE B5	10	2525	881.5	4x4	LTE B5	5	2425	871.5	2x2	24.44	24.54
CA_5A-5A-[66B]	LTE B66	10	132322	1745	QPSK	1	0	66786	2145	4x4	LTE B66	10	66687	2135.1	4x4	LTE B5	10	2525	881.5	2x2	LTE B5	5	2425	871.5	2x2	24.43	24.54
CA_[5A]-[5A]-66B	LTE B66	10	132322	1745	QPSK	1	0	66786	2145	2x2	LTE B66	10	66687	2135.1	2x2	LTE B5	10	2525	881.5	4x4	LTE B5	5	2425	871.5	4x4	24.45	24.54
CA_[5A]-5A-[66B]	LTE B66	10	132322	1745	QPSK	1	0	66786	2145	4x4	LTE B66	10	66687	2135.1	4x4	LTE B5	10	2525	881.5	4x4	LTE B5	5	2425	871.5	2x2	24.47	24.54
CA_[5A]-[5A]-[66B]	LTE B66	10	132322	1745	QPSK	1	0	66786	2145	4x4	LTE B66	10	66687	2135.1	4x4	LTE B5	10	2525	881.5	4x4	LTE B5	5	2425	871.5	4x4	24.42	24.54
CA_[5A]-5A-66C	LTE B66	10	132322	1745	QPSK	1	0	66786	2145	2x2	LTE B66	20	66642	2130.6	2x2	LTE B5	10	2525	881.5	4x4	LTE B5	5	2425	871.5	2x2	24.44	24.54
CA_5A-5A-[66C]	LTE B66	10	132322	1745	QPSK	1	0	66786	2145	4x4	LTE B66	20	66642	2130.6	4x4	LTE B5	10	2525	881.5	2x2	LTE B5	5	2425	871.5	2x2	24.48	24.54
CA_[5A]-[5A]-66C	LTE B66	10	132322	1745	QPSK	1	0	66786	2145	2x2	LTE B66	20	66642	2130.6	2x2	LTE B5	10	2525	881.5	4x4	LTE B5	5	2425	871.5	4x4	24.45	24.54
CA_[5A]-5A-[66C]	LTE B66	10	132322	1745	QPSK	1	0	66786	2145	4x4	LTE B66	20	66642	2130.6	4x4	LTE B5	10	2525	881.5	4x4	LTE B5	5	2425	871.5	2x2	24.43	24.54
CA_[5A]-[5A]-[66C]	LTE B66	10	132322	1745	QPSK	1	0	66786	2145	4x4	LTE B66	20	66642	2130.6	4x4	LTE B5	10	2525	881.5	4x4	LTE B5	5	2425	871.5	4x4	24.47	24.54

	PCC										SCC 1					SCC 2					SCC 3					SCC 4					Power	
Combination	PCC Band	PCC BW [MHz]	PCC (UL) Ch.	PCC (UL) Freq. [MHz]	Mod.	PCC UL# RB	PCC UL RB Offset	PCC (DL) Ch.	PCC (DL) Freq. [MHz]	DL Ant. Config.	SCC Band	SCC BW [MHz]	SCC (DL) Ch.	SCC (DL) Freq. [MHz]	DL Ant. Config.	SCC Band	SCC BW [MHz]	SCC (DL) Ch.	SCC (DL) Freq. [MHz]	DL Ant. Config.	SCC Band	SCC BW [MHz]	SCC (DL) Ch.	SCC (DL) Freq. [MHz]	DL Ant. Config.	SCC Band	SCC BW [MHz]	SCC (DL) Ch.	SCC (DL) Freq. [MHz]	DL Ant. Config.	LTE Tx.Power with DL CA Enabled (dBm)	LTE Single Carrier Tx Power (dBm)
CA_13A-46D-[66A]	LTE B66	10	132322	1745	QPSK	1	0	66786	2145	4x4	LTE B13	10	5230	751	2x2	LTE B46	20	50665	5537.5	2x2	LTE B46	20	50467	5517.7	2x2	LTE B46	20	50863	5557.3	2x2	24.41	24.54
CA_13A-[48A]-48C-66A	LTE B66	10	132322	1745	QPSK	1	0	66786	2145	2x2	LTE B13	10	5230	751	2x2	LTE B48	20	55990	3625	4x4	LTE B48	20	55340	3560	2x2	LTE B48	20	55538	3579.8	2x2	24.46	24.54
CA_13A-48A-[48C]-66A	LTE B66	10	132322	1745	QPSK	1	0	66786	2145	2x2	LTE B13	10	5230	751	2x2	LTE B48	20	55990	3625	2x2	LTE B48	20	55340	3560	4x4	LTE B48	20	55538	3579.8	4x4	24.44	24.54
CA_13A-48A-48C-[66A]	LTE B66	10	132322	1745	QPSK	1	0	66786	2145	4x4	LTE B13	10	5230	751	2x2	LTE B48	20	55990	3625	2x2	LTE B48	20	55340	3560	2x2	LTE B48	20	55538	3579.8	2x2	24.43	24.54
CA_13A-[48A]-[48C]-66A	LTE B66	10	132322	1745	QPSK	1	0	66786	2145	2x2	LTE B13	10	5230	751	2x2	LTE B48	20	55990	3625	4x4	LTE B48	20	55340	3560	4x4	LTE B48	20	55538	3579.8	4x4	24.47	24.54
CA_13A-[48A]-48C-[66A]	LTE B66	10	132322	1745	QPSK	1	0	66786	2145	4x4	LTE B13	10	5230	751	2x2	LTE B48	20	55990	3625	4x4	LTE B48	20	55340	3560	2x2	LTE B48	20	55538	3579.8	2x2	24.45	24.54
CA_13A-48A-[48C]-[66A]	LTE B66	10	132322	1745	QPSK	1	0	66786	2145	4x4	LTE B13	10	5230	751	2x2	LTE B48	20	55990	3625	2x2	LTE B48	20	55340	3560	4x4	LTE B48	20	55538	3579.8	4x4	24.40	24.54
CA_13A-[48A]-[48C]-[66A]	LTE B66	10	132322	1745	QPSK	1	0	66786	2145	4x4	LTE B13	10	5230	751	2x2	LTE B48	20	55990	3625	4x4	LTE B48	20	55340	3560	4x4	LTE B48	20	55538	3579.8	4x4	24.41	24.54
CA_13A-48C-[66A]-66A	LTE B66	10	132322	1745	QPSK	1	0	66786	2145	4x4	LTE B66	20	67236	2190	2x2	LTE B13	10	5230	751	2x2	LTE B48	20	55990	3625	2x2	LTE B48	20	56188	3644.8	2x2	24.44	24.54
CA_13A-48C-66A-[66A]	LTE B66	10	132322	1745	QPSK	1	0	66786	2145	2x2	LTE B66	20	67236	2190	4x4	LTE B13	10	5230	751	2x2	LTE B48	20	55990	3625	2x2	LTE B48	20	56188	3644.8	2x2	24.52	24.54
CA_13A-48C-[66A]-[66A]	LTE B66	10	132322	1745	QPSK	1	0	66786	2145	4x4	LTE B66	20	67236	2190	4x4	LTE B13	10	5230	751	2x2	LTE B48	20	55990	3625	2x2	LTE B48	20	56188	3644.8	2x2	24.45	24.54
CA_13A-[48C]-66A-66A	LTE B66	10	132322	1745	QPSK	1	0	66786	2145	4x4	LTE B66	20	67236	2190	2x2	LTE B13	10	5230	751	2x2	LTE B48	20	55990	3625	4x4	LTE B48	20	56188	3644.8	4x4	24.40	24.54
CA_13A-[48C]-[66A]-66A	LTE B66	10	132322	1745	QPSK	1	0	66786	2145	2x2	LTE B66	20	67236	2190	2x2	LTE B13	10	5230	751	2x2	LTE B48	20	55990	3625	4x4	LTE B48	20	56188	3644.8	4x4	24.46	24.54
CA_13A-[48C]-66A-[66A]	LTE B66	10	132322	1745	QPSK	1	0	66786	2145	2x2	LTE B66	20	67236	2190	4x4	LTE B13	10	5230	751	2x2	LTE B48	20	55990	3625	4x4	LTE B48	20	56188	3644.8	4x4	24.44	24.54
CA_[2A]-12A-30A-66A-66A	LTE B66	10	132322	1745	QPSK	1	0	66786	2145	2x2	LTE B66	20	67236	2190	2x2	LTE B2	20	900	1960	4x4	LTE B12	10	5095	737.5	2x2	LTE B30	10	9820	2355	2x2	24.45	24.54
CA_2A-12A-30A-66A-[66A]	LTE B66	10	132322	1745	QPSK	1	0	66786	2145	2x2	LTE B66	20	67236	2190	4x4	LTE B2	20	900	1960	2x2	LTE B12	10	5095	737.5	2x2	LTE B30	10	9820	2355	2x2	24.48	24.54
CA_2A-12A-30A-[66A]-66A	LTE B66	10	132322	1745	QPSK	1	0	66786	2145	4x4	LTE B66	20	67236	2190	2x2	LTE B2	20	900	1960	2x2	LTE B12	10	5095	737.5	2x2	LTE B30	10	9820	2355	2x2	24.39	24.54
CA_[2A]-12A-30A-66A-[66A]	LTE B66	10	132322	1745	QPSK	1	0	66786	2145	2x2	LTE B66	20	67236	2190	4x4	LTE B2	20	900	1960	4x4	LTE B12	10	5095	737.5	2x2	LTE B30	10	9820	2355	2x2	24.47	24.54
CA_[2A]-12A-30A-[66A]-66A	LTE B66	10	132322	1745	QPSK	1	0	66786	2145	4x4	LTE B66	20	67236	2190	2x2	LTE B2	20	900	1960	4x4	LTE B12	10	5095	737.5	2x2	LTE B30	10	9820	2355	2x2	24.40	24.54
CA_2A-12A-30A-[66A]-[66A]	LTE B66	10	132322	1745	QPSK	1	0	66786	2145	4x4	LTE B66	20	67236	2190	4x4	LTE B2	20	900	1960	2x2	LTE B12	10	5095	737.5	2x2	LTE B30	10	9820	2355	2x2	24.42	24.54
CA_[2A]-12A-30A-[66A]-[66A]	LTE B66	10	132322	1745	QPSK	1	0	66786	2145	4x4	LTE B66	20	67236	2190	4x4	LTE B2	20	900	1960	4x4	LTE B12	10	5095	737.5	2x2	LTE B30	10	9820	2355	2x2	24.41	24.54
CA_[2A]-13A-48A-48A-66A	LTE B66	10	132322	1745	QPSK	1	0	66786	2145	2x2	LTE B2	20	900	1960	4x4	LTE B13	10	5230	751	2x2	LTE B48	20	55990	3625	2x2	LTE B48	20	55340	3560	2x2	24.49	24.54
CA_2A-13A-[48A]-48A-66A	LTE B66	10	132322	1745	QPSK	1	0	66786	2145	2x2	LTE B2	20	900	1960	2x2	LTE B13	10	5230	751	2x2	LTE B48	20	55990	3625	4x4	LTE B48	20	55340	3560	2x2	24.46	24.54
CA_2A-13A-48A-48A-[66A]	LTE B66	10	132322	1745	QPSK	1	0	66786	2145	4x4	LTE B2	20	900	1960	2x2	LTE B13	10	5230	751	2x2	LTE B48	20	55990	3625	2x2	LTE B48	20	55340	3560	2x2	24.39	24.54
CA_[2A]-13A-[48A]-48A-66A	LTE B66	10	132322	1745	QPSK	1	0	66786	2145	2x2	LTE B2	20	900	1960	4x4	LTE B13	10	5230	751	2x2	LTE B48	20	55990	3625	4x4	LTE B48	20	55340	3560	2x2	24.45	24.54
CA_[2A]-13A-48A-48A-[66A]	LTE B66	10	132322	1745	QPSK	1	0	66786	2145	4x4	LTE B2	20	900	1960	4x4	LTE B13	10	5230	751	2x2	LTE B48	20	55990	3625	2x2	LTE B48	20	55340	3560	2x2	24.40	24.54
CA_2A-13A-[48A]-[48A]-66A	LTE B66	10	132322	1745	QPSK	1	0	66786	2145	2x2	LTE B2	20	900	1960	2x2	LTE B13	10	5230	751	2x2	LTE B48	20	55990	3625	4x4	LTE B48	20	55340	3560	4x4	24.50	24.54
CA_2A-13A-[48A]-48A-[66A]	LTE B66	10	132322	1745	QPSK	1	0	66786	2145	4x4	LTE B2	20	900	1960	2x2	LTE B13	10	5230	751	2x2	LTE B48	20	55990	3625	4x4	LTE B48	20	55340	3560	2x2	24.41	24.54
CA_[2A]-13A-[48A]-[48A]-66A	LTE B66	10	132322	1745	QPSK	1	0	66786	2145	2x2	LTE B2	20	900	1960	4x4	LTE B13	10	5230	751	2x2	LTE B48	20	55990	3625	4x4	LTE B48	20	55340	3560	4x4	24.47	24.54
CA_[2A]-13A-[48A]-48A-[66A]	LTE B66	10	132322	1745	QPSK	1	0	66786	2145	4x4	LTE B2	20	900	1960	4x4	LTE B13	10	5230	751	2x2	LTE B48	20	55990	3625	4x4	LTE B48	20	55340	3560	2x2	24.39	24.54
CA_2A-13A-[48A]-[48A]-[66A]	LTE B66	10	132322	1745	QPSK	1	0	66786	2145	4x4	LTE B2	20	900	1960	2x2	LTE B13	10	5230	751	2x2	LTE B48	20	55990	3625	4x4	LTE B48	20	55340	3560	4x4	24.40	24.54
CA_[2A]-13A-[48A]-[48A]-[66A]	LTE B66	10	132322	1745	QPSK	1	0	66786	2145	4x4	LTE B2	20	900	1960	4x4	LTE B13	10	5230	751	2x2	LTE B48	20	55990	3625	4x4	LTE B48	20	55340	3560	4x4	24.41	24.54
CA_[2A]-13A-48A-66A-66A	LTE B66	10	132322	1745	QPSK	1	0	66786	2145	2x2	LTE B66	20	67236	2190	2x2	LTE B2	20	900	1960	4x4	LTE B13	10	5230	751	2x2	LTE B48	20	55990	3625	2x2	24.46	24.54
CA_2A-13A-[48A]-66A-66A	LTE B66	10	132322	1745	QPSK	1	0	66786	2145	2x2	LTE B66	20	67236	2190	2x2	LTE B2	20	900	1960	2x2	LTE B13	10	5230	751	2x2	LTE B48	20	55990	3625	4x4	24.48	24.54
CA_2A-13A-48A-[66A]-66A	LTE B66	10	132322	1745	QPSK	1	0	66786	2145	4x4	LTE B66	20	67236	2190	2x2	LTE B2	20	900	1960	2x2	LTE B13	10	5230	751	2x2	LTE B48	20	55990	3625	2x2	24.45	24.54
CA_2A-13A-48A-66A-[66A]	LTE B66	10	132322	1745	QPSK	1	0	66786	2145	2x2	LTE B66	20	67236	2190	4x4	LTE B2	20	900	1960	2x2	LTE B13	10	5230	751	2x2	LTE B48	20	55990	3625	2x2	24.51	24.54
CA_[2A]-13A-[48A]-66A-66A	LTE B66	10	132322	1745	QPSK	1	0	66786	2145	2x2	LTE B66	20	67236	2190	2x2	LTE B2	20	900	1960	4x4	LTE B13	10	5230	751	2x2	LTE B48	20	55990	3625	4x4	24.50	24.54
CA_[2A]-13A-48A-[66A]-66A	LTE B66	10	132322	1745	QPSK	1	0	66786	2145	4x4	LTE B66	20	67236	2190	2x2	LTE B2	20	900	1960	4x4	LTE B13	10	5230	751	2x2	LTE B48	20	55990	3625	2x2	24.43	24.54
CA_[2A]-13A-48A-66A-[66A]	LTE B66	10	132322	1745	QPSK	1	0	66786	2145	2x2	LTE B66	20	67236	2190	4x4	LTE B2	20	900	1960	4x4	LTE B13	10	5230	751	2x2	LTE B48	20	55990	3625	2x2	24.52	24.54
CA_2A-13A-[48A]-[66A]-66A	LTE B66	10	132322	1745	QPSK	1	0	66786	2145	4x4	LTE B66	20	67236	2190	2x2	LTE B2	20	900	1960	2x2	LTE B13	10	5230	751	2x2	LTE B48	20	55990	3625	4x4	24.44	24.54
CA_2A-13A-[48A]-66A-[66A]	LTE B66	10	132322	1745	QPSK	1	0	66786	2145	2x2	LTE B66	20	67236	2190	4x4	LTE B2	20	900	1960	2x2	LTE B13	10	5230	751	2x2	LTE B48	20	55990	3625	4x4	24.46	24.54
CA_2A-13A-48A-[66A]-[66A]	LTE B66	10	132322	1745	QPSK	1	0	66786	2145	4x4	LTE B66	20	67236	2190	4x4	LTE B2	20	900	1960	2x2	LTE B13	10	5230	751	2x2	LTE B48	20	55990	3625	2x2	24.42	24.54
CA_[2A]-13A-[48A]-[66A]-66A	LTE B66	10	132322	1745	QPSK	1	0	66786	2145	4x4	LTE B66	20	67236	2190	2x2	LTE B2	20	900	1960	4x4	LTE B13	10	5230	751	2x2	LTE B48	20	55990	3625	4x4	24.41	24.54
CA_[2A]-13A-[48A]-66A-[66A]	LTE B66	10	132322	1745	QPSK	1	0	66786	2145	2x2	LTE B66	20	67236	2190	4x4	LTE B2	20	900	1960	4x4	LTE B13	10	5230	751	2x2	LTE B48	20	55990	3625	4x4	24.45	24.54
CA_[2A]-13A-48A-[66A]-[66A]	LTE B66	10	132322	1745	QPSK	1	0	66786	2145	4x4	LTE B66	20	67236	2190	4x4	LTE B2	20	900	1960	4x4	LTE B13	10	5230	751	2x2	LTE B48	20	55990	3625	2x2	24.43	24.54
CA_2A-13A-[48A]-[66A]-[66A]	LTE B66	10	132322	1745	QPSK	1	0	66786	2145	4x4	LTE B66	20	67236	2190	4x4	LTE B2	20	900	1960	2x2	LTE B13	10	5230	751	2x2	LTE B48	20	55990	3625	4x4	24.41	24.54
CA_[2A]-13A-[48A]-[66A]-[66A]	LTE B66	10	132322	1745	QPSK	1	0	66786	2145	4x4	LTE B66	20	67236	2190	4x4	LTE B2	20	900	1960	4x4	LTE B13	10	5230	751	2x2	LTE B48	20	55990	3625	4x4	24.40	24.54
CA_[2A]-13A-48C-66A	LTE B66	10	132322	1745	QPSK	1	0	66786	2145	2x2	LTE B2	20	900	1960	4x4	LTE B13	10	5230	751	2x2	LTE B48	20	55990	3625	2x2	LTE B48	20	56188	3644.8	2x2	24.49	24.54
CA_2A-13A-[48C]-66A	LTE B66	10	132322	1745	QPSK	1	0	66786	2145	2x2	LTE B2	20	900	1960	2x2	LTE B13	10	5230	751	2x2	LTE B48	20	55990	3625	4x4	LTE B48	20	56188	3644.8	4x4	24.50	24.54
CA_2A-13A-48C-[66A]	LTE B66	10	132322	1745	QPSK	1	0	66786	2145	4x4	LTE B2	20	900	1960	2x2	LTE B13	10	5230	751	2x2	LTE B48	20	55990	3625	2x2	LTE B48	20	56188	3644.8	2x2	24.43	24.54
CA_[2A]-13A-[48C]-66A	LTE B66	10	132322	1745	QPSK	1	0	66786	2145	2x2	LTE B2	20	900	1960	4x4	LTE B13	10	5230	751	2x2	LTE B48	20	55990	3625	4x4	LTE B48	20	56188	3644.8	4x4	24.47	24.54
CA_[2A]-13A-48C-[66A]	LTE B66	10	132322	1745	QPSK	1	0	66786	2145	4x4	LTE B2	20	900	1960	4x4	LTE B13	10	5230	751	2x2	LTE B48	20	55990	3625	2x2	LTE B48	20	56188	3644.8	2x2	24.40	24.54
CA_2A-13A-[48C]-[66A]	LTE B66	10	132322	1745	QPSK	1	0	66786	2145	4x4	LTE B2	20	900	1960	2x2	LTE B13	10	5230	751	2x2	LTE B48	20	55990	3625	4x4	LTE B48	20	56188	3644.8	4x4	24.41	24.54
CA_[2A]-13A-[48C]-[66A]	LTE B66	10	132322	1745	QPSK	1	0	66786	2145	4x4	LTE B2	20	900	1960	4x4	LTE B13	10	5230	751	2x2	LTE B48	20	55990	3625	4x4	LTE B48	20	56188	3644.8	4x4	24.42	24.54
CA_[2A]-2A-12A-30A-66A	LTE B66	10	132322	1745	QPSK	1	0	66786	2145	2x2	LTE B2	20	900	1960	4x4	LTE B2	20	700	1940	2x2	LTE B12	10	5095	737.5	2x2	LTE B30	10	9820	2355	2x2	24.49	24.54
CA_2A-2A-12A-30A-[66A]	LTE B66	10	132322	1745	QPSK	1	0	66786	2145	4x4	LTE B2	20	900	1960	2x2	LTE B2	20	700	1940	2x2	LTE B12	10	5095	737.5	2x2	LTE B30	10	9820	2355	2x2	24.40	24.54
CA_[2A]-[2A]-12A-30A-66A	LTE B66	10	132322	1745	QPSK	1	0	66786	2145	2x2	LTE B2	20	900	1960	4x4	LTE B2	20	700	1940	4x4	LTE B12	10	5095	737.5	2x2	LTE B30	10	9820	2355	2x2	24.45	24.54
CA_[2A]-2A-12A-30A-[66A]	LTE B66	10	132322	1745	QPSK	1	0	66786	2145	4x4	LTE B2	20	900	1960	4x4	LTE B2	20	700	1940	2x2	LTE B12	10	5095	737.5	2x2	LTE B30	10	9820	2355	2x2	24.43	24.54
CA_[2A]-[2A]-12A-30A-[66A]	LTE B66	10	132322	1745	QPSK	1	0	66786	2145	4x4	LTE B2	20	900	1960	4x4	LTE B2	20	700	1940	4x4	LTE B12	10	5095	737.5	2x2	LTE B30	10	9820	2355	2x2	24.41	24.54
CA_[2A]-2A-12A-66A-66A	LTE B66	10	132322	1745	QPSK	1	0	66786	2145	2x2	LTE B66	20	67236	2190	2x2	LTE B2	20	900	1960	4x4	LTE B2	20	700	1940	2x2	LTE B12	10	5095	737.5	2x2	24.44	24.54
CA_2A-2A-12A-66A-[66A]	LTE B66	10	132322	1745	QPSK	1	0	66786	2145	2x2	LTE B66	20	67236	2190	4x4	LTE B2	20	900	1960	2x2	LTE B2	20	700	1940	2x2	LTE B12	10	5095	737.5	2x2	24.43	24.54
CA_2A-2A-12A-[66A]-66A	LTE B66	10	132322	1745	QPSK	1	0	66786	2145	4x4	LTE B66	20	67236	2190	2x2	LTE B2	20	900	1960	2x2	LTE B2	20	700	1940	2x2	LTE B12	10	5095	737.5	2x2	24.42	24.54
CA_[2A]-[2A]-12A-66A-66A	LTE B66	10	132322	1745	QPSK	1	0	66786	2145	2x2	LTE B66	20	67236	2190	2x2	LTE B2	20	900	1960	4x4	LTE B2	20	700	1940	4x4	LTE B12	10	5095	737.5	2x2	24.45	24.54
CA_[2A]-2A-12A-66A-[66A]	LTE B66	10	132322	1745	QPSK	1	0	66786	2145	2x2	LTE B66	20	67236	2190	4x4	LTE B2	20	900	1960	4x4	LTE B2	20	700	1940	2x2	LTE B12	10	5095	737.5	2x2	24.46	24.54
CA_[2A]-2A-12A-[66A]-66A	LTE B66	10	132322	1745	QPSK	1	0	66786	2145	4x4	LTE B66	20	67236	2190	2x2	LTE B2	20	900	1960	4x4	LTE B2	20	700	1940	2x2	LTE B12	10	5095	737.5	2x2	24.40	24.54
CA_2A-2A-12A-[66A]-[66A]	LTE B66	10	132322	1745	QPSK	1	0	66786	2145	4x4	LTE B66	20	67236	2190	4x4	LTE B2	20	900	1960	2x2	LTE B2	20	700	1940	2x2	LTE B12	10	5095	737.5	2x2	24.39	24.54
CA_[2A]-[2A]-12A-[66A]-66A	LTE B66	10	132322	1745	QPSK	1	0	66786	2145	4x4	LTE B66	20	67236	2190	2x2	LTE B2	20	900	1960	4x4	LTE B2	20	700	1940	4x4	LTE B12	10	5095	737.5	2x2	24.41	24.54
CA_[2A]-[2A]-12A-66A-[66A]	LTE B66	10	132322	1745	QPSK	1	0	66786	2145	2x2	LTE B66	20	67236	2190	4x4	LTE B2	20	900	1960	4x4	LTE B2	20	700	1940	4x4	LTE B12	10	5095	737.5	2x2	24.45	24.54
CA_[2A]-2A-12A-[66A]-[66A]	LTE B66	10	132322	1745	QPSK	1	0	66786	2145	4x4	LTE B66	20	67236	2190	4x4	LTE B2	20	900	1960	4x4	LTE B2	20	700	1940	2x2	LTE B12	10	5095	737.5	2x2	24.43	24.54
CA_[2A]-[2A]-12A-[66A]-[66A]	LTE B66	10	132322	1745	QPSK	1	0	66786	2145	4x4	LTE B66	20	67236	2190	4x4	LTE B2	20	900	1960	4x4	LTE B2	20	700	1940	4x4	LTE B12	10	5095	737.5	2x2	24.40	24.54
CA_[2A]-2A-13A-66A-66A	LTE B66	10	132322	1745	QPSK	1	0	66786	2145	2x2	LTE B66	20	67236	2190	2x2	LTE B2	20	900	1960	4x4	LTE B2	20	700	1940	2x2	LTE B13	10	5230	751	2x2	24.51	24.54
CA_2A-2A-13A-66A-[66A]	LTE B66	10	132322	1745	QPSK	1	0	66786	2145	2x2	LTE B66	20	67236	2190	4x4	LTE B2	20	900	1960	2x2	LTE B2	20	700	1940	2x2	LTE B13	10	5230	751	2x2	24.45	24.54
CA_2A-2A-13A-[66A]-66A	LTE B66	10	132322	1745	QPSK	1	0	66786	2145	4x4	LTE B66	20	67236	2190	2x2	LTE B2	20	900	1960	2x2	LTE B2	20	700	1940	2x2	LTE B13	10	5230	751	2x2	24.42	24.54
CA_[2A]-[2A]-13A-66A-66A	LTE B66	10	132322	1745	QPSK	1	0	66786	2145	2x2	LTE B66	20	67236	2190	2x2	LTE B2	20	900	1960	4x4	LTE B2	20	700	1940	4x4	LTE B13	10	5230	751	2x2	24.43	24.54
CA_[2A]-2A-13A-66A-[66A]	LTE B66	10	132322	1745	QPSK	1	0	66786	2145	2x2	LTE B66	20	67236	2190	4x4	LTE B2	20	900	1960	4x4	LTE B2	20	700	1940	2x2	LTE B13	10	5230	751	2x2	24.46	24.54
CA_[2A]-2A-13A-[66A]-66A	LTE B66	10	132322	1745	QPSK	1	0	66786	2145	4x4	LTE B66	20	67236	2190	2x2	LTE B2	20	900	1960	4x4	LTE B2	20	700	1940	2x2	LTE B13	10	5230	751	2x2	24.39	24.54
CA_2A-2A-13A-[66A]-[66A]	LTE B66	10	132322	1745	QPSK	1	0	66786	2145	4x4	LTE B66	20	67236	2190	4x4	LTE B2	20	900	1960	2x2	LTE B2	20	700	1940	2x2	LTE B13	10	5230	751	2x2	24.40	24.54
CA_[2A]-[2A]-13A-[66A]-66A	LTE B66	10	132322	1745	QPSK	1	0	66786	2145	4x4	LTE B66	20	67236	2190	2x2	LTE B2	20	900	1960	4x4	LTE B2	20	700	1940	4x4	LTE B13	10	5230	751	2x2	24.42	24.54
CA_[2A]-[2A]-13A-66A-[66A]	LTE B66	10	132322	1745	QPSK	1	0	66786	2145	2x2	LTE B66	20	67236	2190	4x4	LTE B2	20	900	1960	4x4	LTE B2	20	700	1940	4x4	LTE B13	10	5230	751	2x2	24.47	24.54
CA_[2A]-2A-13A-[66A]-[66A]	LTE B66	10	132322	1745	QPSK	1	0	66786	2145	4x4	LTE B66	20	67236	2190	4x4	LTE B2	20	900	1960	4x4	LTE B2	20	700	1940	2x2	LTE B13	10	5230	751	2x2	24.41	24.54
CA_[2A]-[2A]-13A-[66A]-[66A]	LTE B66	10	132322	1745	QPSK	1	0	66786	2145	4x4	LTE B66	20	67236	2190	4x4	LTE B2	20	900	1960	4x4	LTE B2	20	700	1940	4x4	LTE B13	10	5230	751	2x2	24.40	24.54
CA_[2A]-2A-5A-30A-66A	LTE B66	10	132322	1745	QPSK	1	0	66786	2145	2x2	LTE B2	20	900	1960	4x4	LTE B2	20	700	1940	2x2	LTE B5	10	2525	881.5	2x2	LTE B30	10	9820	2355	2x2	24.50	24.54
CA_2A-2A-[5A]-30A-66A	LTE B66	10	132322	1745	QPSK	1	0	66786	2145	2x2	LTE B2	20	900	1960	2x2	LTE B2	20	700	1940	2x2	LTE B5	10	2525	881.5	4x4	LTE B30	10	9820	2355	2x2	24.53	24.54
CA_2A-2A-5A-30A-[66A]	LTE B66	10	132322	1745	QPSK	1	0	66786	2145	4x4	LTE B2	20	900	1960	2x2	LTE B2	20	700	1940	2x2	LTE B5	10	2525	881.5	2x2	LTE B30	10	9820	2355	2x2	24.45	24.54
CA_[2A]-[2A]-5A-30A-66A	LTE B66	10	132322	1745	QPSK	1	0	66786	2145	2x2	LTE B2	20	900	1960	4x4	LTE B2	20	700	1940	4x4	LTE B5	10	2525	881.5	2x2	LTE B30	10	9820	2355	2x2	24.49	24.54
CA_[2A]-2A-[5A]-30A-66A	LTE B66	10	132322	1745	QPSK	1	0	66786	2145	2x2	LTE B2	20	900	1960	4x4	LTE B2	20	700	1940	2x2	LTE B5	10	2525	881.5	4x4	LTE B30	10	9820	2355	2x2	24.47	24.54
CA_[2A]-2A-5A-30A-[66A]	LTE B66	10	132322	1745	QPSK	1	0	66786	2145	4x4	LTE B2	20	900	1960	4x4	LTE B2	20	700	1940	2x2	LTE B5	10	2525	881.5	2x2	LTE B30	10	9820	2355	2x2	24.44	24.54
CA_2A-2A-[5A]-30A-[66A]	LTE B66	10	132322	1745	QPSK	1	0	66786	2145	4x4	LTE B2	20	900	1960	2x2	LTE B2	20	700	1940	2x2	LTE B5	10	2525	881.5	4x4	LTE B30	10	9820	2355	2x2	24.46	24.54
CA_[2A]-[2A]-[5A]-30A-66A	LTE B66	10	132322	1745	QPSK	1	0	66786	2145	2x2	LTE B2	20	900	1960	4x4	LTE B2	20	700	1940	4x4	LTE B5	10	2525	881.5	4x4	LTE B30	10	9820	2355	2x2	24.50	24.54
CA_[2A]-[2A]-5A-30A-[66A]	LTE B66	10	132322	1745	QPSK	1	0	66786	2145	4x4	LTE B2	20	900	1960	4x4	LTE B2	20	700	1940	2x2	LTE B5	10	2525	881.5	2x2	LTE B30	10	9820	2355	4x4	24.43	24.54
CA_[2A]-2A-[5A]-30A-[66A]	LTE B66	10	132322	1745	QPSK	1	0	66786	2145	4x4	LTE B2	20	900	1960	4x4	LTE B2	20	700	1940	2x2	LTE B5	10	2525	881.5	4x4	LTE B30	10	9820	2355	2x2	24.45	24.54
CA_[2A]-[2A]-[5A]-30A-[66A]	LTE B66	10	132322	1745	QPSK	1	0	66786	2145	4x4	LTE B2	20	900	1960	4x4	LTE B2	20	700	1940	4x4	LTE B5	10	2525	881.5	4x4	LTE B30	10	9820	2355	2x2	24.48	24.54
CA_[2A]-2A-5A-66A-66A	LTE B66	10	132322	1745	QPSK	1	0	66786	2145	2x2	LTE B66	20	67236	2190	2x2	LTE B2	20	900	1960	4x4	LTE B2	20	700	1940	2x2	LTE B5	10	2525	881.5	2x2	24.50	24.54
CA_2A-2A-[5A]-66A-66A	LTE B66	10	132322	1745	QPSK	1	0	66786	2145	2x2	LTE B66	20	67236	2190	2x2	LTE B2	20	900	1960	2x2	LTE B2	20	700	1940	2x2	LTE B5	10	2525	881.5	4x4	24.49	24.54
CA_2A-2A-5A-66A-[66A]	LTE B66	10	132322	1745	QPSK	1	0	66786	2145	2x2	LTE B66	20	67236	2190	4x4	LTE B2	20	900	1960	2x2	LTE B2	20	700	1940	2x2	LTE B5	10	2525	881.5	2x2	24.47	24.54
CA_2A-2A-5A-[66A]-66A	LTE B66	10	132322	1745	QPSK	1	0	66786	2145	4x4	LTE B66	20	67236	2190	2x2	LTE B2	20	900	1960	2x2	LTE B2	20	700	1940	2x2	LTE B5	10	2525	881.5	2x2	24.45	24.54
CA_[2A]-[2A]-5A-66A-66A	LTE B66	10	132322	1745	QPSK	1	0	66786	2145	2x2	LTE B66	20	67236	2190	2x2	LTE B2	20	900	1960	4x4	LTE B2	20	700	1940	4x4	LTE B5	10	2525	881.5	2x2	24.44	24.54
CA_[2A]-2A-[5A]-66A-66A	LTE B66	10	132322	1745	QPSK	1	0	66786	2145	2x2	LTE B66	20	67236	2190	2x2	LTE B2	20	900	1960	4x4	LTE B2	20	700	1940	2x2	LTE B5	10	2525	881.5	4x4	24.43	24.54
CA_[2A]-2A-5A-66A-[66A]	LTE B66	10	132322	1745	QPSK	1	0	66786	2145	2x2	LTE B66	20	67236	2190	4x4	LTE B2	20	900	1960	4x4	LTE B2	20	700	1940	2x2	LTE B5	10	2525	881.5	2x2	24.48	24.54
CA_[2A]-2A-5A-[66A]-66A	LTE B66	10	132322	1745	QPSK	1	0	66786	2145	4x4	LTE B66	20	67236	2190	2x2	LTE B2	20	900	1960	4x4	LTE B2	20	700	1940	2x2	LTE B5	10	2525	881.5	2x2	24.42	24.54
CA_2A-2A-[5A]-[66A]-66A	LTE B66	10	132322	1745	QPSK	1	0	66786	2145	4x4	LTE B66	20	67236	2190	2x2	LTE B2	20	900	1960	2x2	LTE B2	20	700	1940	2x2	LTE B5	10	2525	881.5	4x4	24.43	24.54
CA_2A-2A-[5A]-66A-[66A]	LTE B66	10	132322	1745	QPSK	1	0	66786	2145	2x2	LTE B66	20	67236	2190	4x4	LTE B2	20	900	1960	2x2	LTE B2	20	700	1940	2x2	LTE B5	10	2525	881.5	4x4	24.49	24.54
CA_2A-2A-5A-[66A]-[66A]	LTE B66	10	132322	1745	QPSK	1	0	66786	2145	4x4	LTE B66	20	67236	2190	4x4	LTE B2	20	900	1960	2x2	LTE B2	20	700	1940	2x2	LTE B5	10	2525	881.5	2x2	24.41	24.54
CA_[2A]-[2A]-[5A]-66A-66A	LTE B66	10	132322	1745	QPSK	1	0	66786	2145	2x2	LTE B66	20	67236	2190	2x2	LTE B2	20	900	1960	4x4	LTE B2	20	700	1940	4x4	LTE B5	10	2525	881.5	4x4	24.50	24.54
CA_[2A]-[2A]-5A-[66A]-66A	LTE B66	10	132322	1745	QPSK	1	0	66786	2145	4x4	LTE B66	20	67236	2190	2x2	LTE B2	20	900	1960	4x4	LTE B2	20	700	1940	4x4	LTE B5	10	2525	881.5	2x2	24.43	24.54
CA_[2A]-[2A]-5A-66A-[66A]	LTE B66	10	132322	1745	QPSK	1	0	66786	2145	2x2	LTE B66	20	67236	2190	4x4	LTE B2	20	900	1960	4x4	LTE B2	20	700	1940	4x4	LTE B5	10	2525	881.5	2x2	24.44	24.54
CA_[2A]-2A-[5A]-[66A]-66A	LTE B66	10	132322	1745	QPSK	1	0	66786	2145	4x4	LTE B66	20	67236	2190	2x2	LTE B2	20	900	1960	4x4	LTE B2	20	700	1940	2x2	LTE B5	10	2525	881.5	4x4	24.42	24.54
CA_[2A]-2A-[5A]-66A-[66A]	LTE B66	10	132322	1745	QPSK	1	0	66786	2145	2x2	LTE B66	20	67236	2190	4x4	LTE B2	20	900	1960	4x4	LTE B2	20	700	1940	2x2	LTE B5	10	2525	881.5	4x4	24.45	24.54
CA_[2A]-2A-5A-[66A]-[66A]	LTE B66	10	132322	1745	QPSK	1	0	66786	2145	4x4	LTE B66	20	67236	2190	4x4	LTE B2	20	900	1960	4x4	LTE B2	20	700	1940	2x2	LTE B5	10	2525	881.5	2x2	24.44	24.54
CA_2A-2A-[5A]-[66A]-[66A]	LTE B66	10	132322	1745	QPSK	1	0	66786	2145	4x4	LTE B66	20	67236	2190	4x4	LTE B2	20	900	1960	2x2	LTE B2	20	700	1940	2x2	LTE B5	10	2525	881.5	4x4	24.45	24.54
CA_[2A]-[2A]-[5A]-[66A]-66A	LTE B66	10	132322	1745	QPSK	1	0	66786	2145	4x4	LTE B66	20	67236	2190	2x2	LTE B2	20	900	1960	4x4	LTE B2	20	700	1940	4x4	LTE B5	10	2525	881.5	4x4	24.42	24.54
CA_[2A]-[2A]-[5A]-66A-[66A]	LTE B66	10	132322	1745	QPSK	1	0	66786	2145	2x2	LTE B66	20	67236	2190	4x4	LTE B2	20	900	1960	4x4	LTE B2	20	700	1940	4x4	LTE B5	10	2525	881.5	4x4	24.47	24.54
CA_[2A]-[2A]-5A-[66A]-[66A]	LTE B66	10	132322	1745	QPSK	1	0	66786	2145	4x4	LTE B66	20	67236	2190	4x4	LTE B2	20	900	1960	4x4	LTE B2	20	700	1940	4x4	LTE B5	10	2525	881.5	2x2	24.43	24.54
CA_[2A]-2A-[5A]-[66A]-[66A]	LTE B66	10	132322	1745	QPSK	1	0	66786	2145	4x4	LTE B66	20	67236	2190	4x4	LTE B2	20	900	1960	4x4	LTE B2	20	700	1940	2x2	LTE B5	10	2525	881.5	4x4	24.45	24.54
CA_[2A]-[2A]-[5A]-[66A]-[66A]	LTE B66	10	132322	1745	QPSK	1	0	66786	2145	4x4	LTE B66	20	67236	2190	4x4	LTE B2	20	900	1960	4x4	LTE B2	20	700	1940	4x4	LTE B5	10	2525	881.5	4x4	24.43	24.54
CA_[2A]-2A-5A-66B	LTE B66	10	132322	1745	QPSK	1	0	66786	2145	2x2	LTE B66	10	66687	2135.1	2x2	LTE B2	20	900	1960	4x4	LTE B2	20	700	1940	2x2	LTE B5	10	2525	881.5	2x2	24.49	24.54
CA_2A-2A-[5A]-66B	LTE B66	10	132322	1745	QPSK	1	0	66786	2145	2x2	LTE B66	10	66687	2135.1	2x2	LTE B2	20	900	1960	2x2	LTE B2	20	700	1940	2x2	LTE B5	10	2525	881.5	4x4	24.51	24.54
CA_2A-2A-5A-[66B]	LTE B66	10	132322	1745	QPSK	1	0	66786	2145	4x4	LTE B66	10	66687	2135.1	4x4	LTE B2	20	900	1960	2x2	LTE B2	20	700	1940	2x2	LTE B5	10	2525	881.5	2x2	24.40	24.54
CA_[2A]-[2A]-5A-66B	LTE B66	10	132322	1745	QPSK	1	0	66786	2145	2x2	LTE B66	10	66687	2135.1	2x2	LTE B2	20	900	1960	4x4	LTE B2	20	700	1940	4x4	LTE B5	10	2525	881.5	2x2	24.48	24.54
CA_[2A]-2A-[5A]-66B	LTE B66	10	132322	1745	QPSK	1	0	66786	2145	2x2	LTE B66	10	66687	2135.1	2x2	LTE B2	20	900	1960	4x4	LTE B2	20	700	1940	2x2	LTE B5	10	2525	881.5	4x4	24.47	24.54
CA_[2A]-2A-5A-[66B]	LTE B66	10	132322	1745	QPSK	1	0	66786	2145	4x4	LTE B66	10	66687	2135.1	4x4	LTE B2	20	900	1960	4x4	LTE B2	20	700	1940	2x2	LTE B5	10	2525	881.5	2x2	24.36	24.54
CA_2A-2A-[5A]-[66B]	LTE B66	10	132322	1745	QPSK	1	0	66786	2145	4x4	LTE B66	10	66687	2135.1	4x4	LTE B2	20	900	1960	2x2	LTE B2	20	700	1940	2x2	LTE B5	10	2525	881.5	4x4	24.44	24.54
CA_[2A]-[2A]-[5A]-66B	LTE B66	10	132322	1745	QPSK	1	0	66786	2145	2x2	LTE B66	10	66687	2135.1	2x2	LTE B2	20	900	1960	4x4	LTE B2	20	700	1940	4x4	LTE B5	10	2525	881.5	4x4	24.45	24.54
CA_[2A]-[2A]-5A-[66B]	LTE B66	10	132322	1745	QPSK	1	0	66786	2145	4x4	LTE B66	10	66687	2135.1	4x4	LTE B2	20	900	1960	4x4	LTE B2	20	700	1940	4x4	LTE B5	10	2525	881.5	2x2	24.40	24.54
CA_[2A]-2A-[5A]-[66B]	LTE B66	10	132322	1745	QPSK	1	0	66786	2145	4x4	LTE B66	10	66687	2135.1	4x4	LTE B2	20	900	1960	4x4	LTE B2	20	700	1940	2x2	LTE B5	10	2525	881.5	4x4	24.41	24.54
CA_[2A]-[2A]-[5A]-[66B]	LTE B66	10	132322	1745	QPSK	1	0	66786	2145	4x4	LTE B66	10	66687	2135.1	4x4	LTE B2	20	900	1960	4x4	LTE B2	20	700	1940	2x2	LTE B5	10	2525	881.5	4x4	24.43	24.54

Combination	PCC										SCC 1					SCC 2					SCC 3					SCC 4					SCC 5					Power	
Combination	PCC Band	PCC BW [MHz]	PCC (UL) Ch.	PCC (UL) Freq. [MHz]	Mod.	PCC UL# RB	PCC UL RB Offset	PCC (DL) Ch.	PCC (DL) Freq. [MHz]	DL Ant. Config.	SCC Band	SCC BW [MHz]	SCC (DL) Ch.	SCC (DL) Freq. [MHz]	DL Ant. Config.	SCC Band	SCC BW [MHz]	SCC (DL) Ch.	SCC (DL) Freq. [MHz]	DL Ant. Config.	SCC Band	SCC BW [MHz]	SCC (DL) Ch.	SCC (DL) Freq. [MHz]	DL Ant. Config.	SCC Band	SCC BW [MHz]	SCC (DL) Ch.	SCC (DL) Freq. [MHz]	DL Ant. Config.	SCC Band	SCC BW [MHz]	SCC (DL) Ch.	SCC (DL) Freq. [MHz]	DL Ant. Config.	LTE Tx.Power with DL CA Enabled (dBm)	LTE Single Carrier Tx Power (dBm)
CA_[2A]-2A-5A-66C	LTE B66	10	132322	1745	QPSK	1	0	66786	2145	2x2	LTE B66	20	66642	2130.6	2x2	LTE B2	20	900	1960	4x4	LTE B2	20	700	1940	2x2	LTE B5	10	2525	881.5	2x2	-	-	-	-	-	24.48	24.54
CA_2A-2A-[5A]-66C	LTE B66	10	132322	1745	QPSK	1	0	66786	2145	2x2	LTE B66	20	66642	2130.6	2x2	LTE B2	20	900	1960	2x2	LTE B2	20	700	1940	2x2	LTE B5	10	2525	881.5	4x4	-	-	-	-	-	24.50	24.54
CA_2A-2A-5A-[66C]	LTE B66	10	132322	1745	QPSK	1	0	66786	2145	4x4	LTE B66	20	66642	2130.6	4x4	LTE B2	20	900	1960	2x2	LTE B2	20	700	1940	2x2	LTE B5	10	2525	881.5	2x2	-	-	-	-	-	24.41	24.54
CA_[2A]-[2A]-5A-66C	LTE B66	10	132322	1745	QPSK	1	0	66786	2145	2x2	LTE B66	20	66642	2130.6	2x2	LTE B2	20	900	1960	4x4	LTE B2	20	700	1940	4x4	LTE B5	10	2525	881.5	2x2	-	-	-	-	-	24.49	24.54
CA_[2A]-2A-[5A]-66C	LTE B66	10	132322	1745	QPSK	1	0	66786	2145	2x2	LTE B66	20	66642	2130.6	2x2	LTE B2	20	900	1960	4x4	LTE B2	20	700	1940	2x2	LTE B5	10	2525	881.5	4x4	-	-	-	-	-	24.51	24.54
CA_[2A]-2A-5A-[66C]	LTE B66	10	132322	1745	QPSK	1	0	66786	2145	4x4	LTE B66	20	66642	2130.6	4x4	LTE B2	20	900	1960	4x4	LTE B2	20	700	1940	2x2	LTE B5	10	2525	881.5	2x2	-	-	-	-	-	24.40	24.54
CA_2A-2A-[5A]-[66C]	LTE B66	10	132322	1745	QPSK	1	0	66786	2145	4x4	LTE B66	20	66642	2130.6	4x4	LTE B2	20	900	1960	2x2	LTE B2	20	700	1940	2x2	LTE B5	10	2525	881.5	4x4	-	-	-	-	-	24.43	24.54
CA_[2A]-[2A]-[5A]-66C	LTE B66	10	132322	1745	QPSK	1	0	66786	2145	2x2	LTE B66	20	66642	2130.6	2x2	LTE B2	20	900	1960	4x4	LTE B2	20	700	1940	4x4	LTE B5	10	2525	881.5	4x4	-	-	-	-	-	24.48	24.54
CA_[2A]-[2A]-5A-[66C]	LTE B66	10	132322	1745	QPSK	1	0	66786	2145	4x4	LTE B66	20	66642	2130.6	4x4	LTE B2	20	900	1960	4x4	LTE B2	20	700	1940	4x4	LTE B5	10	2525	881.5	2x2	-	-	-	-	-	24.44	24.54
CA_[2A]-2A-[5A]-[66C]	LTE B66	10	132322	1745	QPSK	1	0	66786	2145	4x4	LTE B66	20	66642	2130.6	4x4	LTE B2	20	900	1960	4x4	LTE B2	20	700	1940	2x2	LTE B5	10	2525	881.5	4x4	-	-	-	-	-	24.42	24.54
CA_[2A]-[2A]-[5A]-[66C]	LTE B66	10	132322	1745	QPSK	1	0	66786	2145	4x4	LTE B66	20	66642	2130.6	4x4	LTE B2	20	900	1960	4x4	LTE B2	20	700	1940	4x4	LTE B5	10	2525	881.5	4x4	-	-	-	-	-	24.41	24.54
CA_[2A]-46A-46C-66A	LTE B66	10	132322	1745	QPSK	1	0	66786	2145	2x2	LTE B2	20	900	1960	4x4	LTE B46	20	50665	5537.5	2x2	LTE B46	20	50467	5517.7	2x2	LTE B46	20	53540	5825	2x2	-	-	-	-	-	24.45	24.54
CA_2A-46A-46C-[66A]	LTE B66	10	132322	1745	QPSK	1	0	66786	2145	4x4	LTE B2	20	900	1960	2x2	LTE B46	20	50665	5537.5	2x2	LTE B46	20	50467	5517.7	2x2	LTE B46	20	53540	5825	2x2	-	-	-	-	-	24.43	24.54
CA_[2A]-46A-46C-[66A]	LTE B66	10	132322	1745	QPSK	1	0	66786	2145	4x4	LTE B2	20	900	1960	4x4	LTE B46	20	50665	5537.5	2x2	LTE B46	20	50467	5517.7	2x2	LTE B46	20	53540	5825	2x2	-	-	-	-	-	24.45	24.54
CA_[2A]-46D-66A	LTE B66	10	132322	1745	QPSK	1	0	66786	2145	2x2	LTE B2	20	900	1960	4x4	LTE B46	20	50665	5537.5	2x2	LTE B46	20	50467	5517.7	2x2	LTE B46	20	50863	5557.3	2x2	-	-	-	-	-	24.47	24.54
CA_2A-46D-[66A]	LTE B66	10	132322	1745	QPSK	1	0	66786	2145	4x4	LTE B2	20	900	1960	2x2	LTE B46	20	50665	5537.5	2x2	LTE B46	20	50467	5517.7	2x2	LTE B46	20	50863	5557.3	2x2	-	-	-	-	-	24.40	24.54
CA_[2A]-46D-[66A]	LTE B66	10	132322	1745	QPSK	1	0	66786	2145	4x4	LTE B2	20	900	1960	4x4	LTE B46	20	50665	5537.5	2x2	LTE B46	20	50467	5517.7	2x2	LTE B46	20	50863	5557.3	2x2	-	-	-	-	-	24.41	24.54
CA_[2A]-48A-48C-66A	LTE B66	10	132322	1745	QPSK	1	0	66786	2145	2x2	LTE B2	20	900	1960	4x4	LTE B48	20	55990	3625	2x2	LTE B48	20	55340	3560	2x2	LTE B48	20	55538	3579.8	2x2	-	-	-	-	-	24.50	24.54
CA_2A-[48A]-48C-66A	LTE B66	10	132322	1745	QPSK	1	0	66786	2145	2x2	LTE B2	20	900	1960	2x2	LTE B48	20	55990	3625	4x4	LTE B48	20	55340	3560	2x2	LTE B48	20	55538	3579.8	2x2	-	-	-	-	-	24.44	24.54
CA_2A-48A-[48C]-66A	LTE B66	10	132322	1745	QPSK	1	0	66786	2145	2x2	LTE B2	20	900	1960	2x2	LTE B48	20	55990	3625	2x2	LTE B48	20	55340	3560	4x4	LTE B48	20	55538	3579.8	4x4	-	-	-	-	-	24.46	24.54
CA_2A-48A-48C-[66A]	LTE B66	10	132322	1745	QPSK	1	0	66786	2145	4x4	LTE B2	20	900	1960	2x2	LTE B48	20	55990	3625	2x2	LTE B48	20	55340	3560	2x2	LTE B48	20	55538	3579.8	2x2	-	-	-	-	-	24.40	24.54
CA_[2A]-[48A]-48C-66A	LTE B66	10	132322	1745	QPSK	1	0	66786	2145	2x2	LTE B2	20	900	1960	4x4	LTE B48	20	55990	3625	4x4	LTE B48	20	55340	3560	2x2	LTE B48	20	55538	3579.8	2x2	-	-	-	-	-	24.44	24.54
CA_[2A]-48A-[48C]-66A	LTE B66	10	132322	1745	QPSK	1	0	66786	2145	2x2	LTE B2	20	900	1960	4x4	LTE B48	20	55990	3625	2x2	LTE B48	20	55340	3560	4x4	LTE B48	20	55538	3579.8	4x4	-	-	-	-	-	24.49	24.54
CA_[2A]-48A-48C-[66A]	LTE B66	10	132322	1745	QPSK	1	0	66786	2145	4x4	LTE B2	20	900	1960	4x4	LTE B48	20	55990	3625	2x2	LTE B48	20	55340	3560	2x2	LTE B48	20	55538	3579.8	2x2	-	-	-	-	-	24.42	24.54
CA_2A-[48A]-[48C]-66A	LTE B66	10	132322	1745	QPSK	1	0	66786	2145	2x2	LTE B2	20	900	1960	2x2	LTE B48	20	55990	3625	4x4	LTE B48	20	55340	3560	4x4	LTE B48	20	55538	3579.8	4x4	-	-	-	-	-	24.50	24.54
CA_2A-[48A]-48C-[66A]	LTE B66	10	132322	1745	QPSK	1	0	66786	2145	4x4	LTE B2	20	900	1960	2x2	LTE B48	20	55990	3625	4x4	LTE B48	20	55340	3560	2x2	LTE B48	20	55538	3579.8	2x2	-	-	-	-	-	24.41	24.54
CA_2A-48A-[48C]-[66A]	LTE B66	10	132322	1745	QPSK	1	0	66786	2145	4x4	LTE B2	20	900	1960	2x2	LTE B48	20	55990	3625	2x2	LTE B48	20	55340	3560	4x4	LTE B48	20	55538	3579.8	4x4	-	-	-	-	-	24.40	24.54
CA_[2A]-[48A]-[48C]-66A	LTE B66	10	132322	1745	QPSK	1	0	66786	2145	2x2	LTE B2	20	900	1960	4x4	LTE B48	20	55990	3625	4x4	LTE B48	20	55340	3560	4x4	LTE B48	20	55538	3579.8	4x4	-	-	-	-	-	24.46	24.54
CA_[2A]-[48A]-48C-[66A]	LTE B66	10	132322	1745	QPSK	1	0	66786	2145	4x4	LTE B2	20	900	1960	4x4	LTE B48	20	55990	3625	4x4	LTE B48	20	55340	3560	2x2	LTE B48	20	55538	3579.8	2x2	-	-	-	-	-	24.41	24.54
CA_[2A]-48A-[48C]-[66A]	LTE B66	10	132322	1745	QPSK	1	0	66786	2145	4x4	LTE B2	20	900	1960	4x4	LTE B48	20	55990	3625	2x2	LTE B48	20	55340	3560	4x4	LTE B48	20	55538	3579.8	4x4	-	-	-	-	-	24.43	24.54
CA_2A-[48A]-[48C]-[66A]	LTE B66	10	132322	1745	QPSK	1	0	66786	2145	4x4	LTE B2	20	900	1960	2x2	LTE B48	20	55990	3625	4x4	LTE B48	20	55340	3560	4x4	LTE B48	20	55538	3579.8	4x4	-	-	-	-	-	24.44	24.54
CA_[2A]-[48A]-[48C]-[66A]	LTE B66	10	132322	1745	QPSK	1	0	66786	2145	4x4	LTE B2	20	900	1960	4x4	LTE B48	20	55990	3625	4x4	LTE B48	20	55340	3560	4x4	LTE B48	20	55538	3579.8	4x4	-	-	-	-	-	24.40	24.54
CA_[2A]-48C-66A-66A	LTE B66	10	132322	1745	QPSK	1	0	66786	2145	2x2	LTE B66	20	67236	2190	2x2	LTE B2	20	900	1960	4x4	LTE B48	20	55990	3625	2x2	LTE B48	20	56188	3644.8	2x2	-	-	-	-	-	24.45	24.54
CA_2A-48C-[66A]-66A	LTE B66	10	132322	1745	QPSK	1	0	66786	2145	4x4	LTE B66	20	67236	2190	2x2	LTE B2	20	900	1960	2x2	LTE B48	20	55990	3625	2x2	LTE B48	20	56188	3644.8	2x2	-	-	-	-	-	24.42	24.54
CA_2A-48C-66A-[66A]	LTE B66	10	132322	1745	QPSK	1	0	66786	2145	2x2	LTE B66	20	67236	2190	4x4	LTE B2	20	900	1960	2x2	LTE B48	20	55990	3625	2x2	LTE B48	20	56188	3644.8	2x2	-	-	-	-	-	24.48	24.54
CA_[2A]-48C-[66A]-66A	LTE B66	10	132322	1745	QPSK	1	0	66786	2145	4x4	LTE B66	20	67236	2190	2x2	LTE B2	20	900	1960	4x4	LTE B48	20	55990	3625	2x2	LTE B48	20	56188	3644.8	2x2	-	-	-	-	-	24.41	24.54
CA_[2A]-48C-66A-[66A]	LTE B66	10	132322	1745	QPSK	1	0	66786	2145	2x2	LTE B66	20	67236	2190	4x4	LTE B2	20	900	1960	4x4	LTE B48	20	55990	3625	2x2	LTE B48	20	56188	3644.8	2x2	-	-	-	-	-	24.50	24.54
CA_2A-48C-[66A]-[66A]	LTE B66	10	132322	1745	QPSK	1	0	66786	2145	4x4	LTE B66	20	67236	2190	4x4	LTE B2	20	900	1960	2x2	LTE B48	20	55990	3625	2x2	LTE B48	20	56188	3644.8	2x2	-	-	-	-	-	24.42	24.54
CA_[2A]-48C-[66A]-[66A]	LTE B66	10	132322	1745	QPSK	1	0	66786	2145	4x4	LTE B66	20	67236	2190	4x4	LTE B2	20	900	1960	4x4	LTE B48	20	55990	3625	2x2	LTE B48	20	56188	3644.8	2x2	-	-	-	-	-	24.39	24.54
CA_2A-[48C]-66A-66A	LTE B66	10	132322	1745	QPSK	1	0	66786	2145	2x2	LTE B66	20	67236	2190	2x2	LTE B2	20	900	1960	2x2	LTE B48	20	55990	3625	4x4	LTE B48	20	56188	3644.8	4x4	-	-	-	-	-	24.45	24.54
CA_[2A]-[48C]-66A-66A	LTE B66	10	132322	1745	QPSK	1	0	66786	2145	2x2	LTE B66	20	67236	2190	2x2	LTE B2	20	900	1960	4x4	LTE B48	20	55990	3625	4x4	LTE B48	20	56188	3644.8	4x4	-	-	-	-	-	24.51	24.54
CA_2A-[48C]-[66A]-66A	LTE B66	10	132322	1745	QPSK	1	0	66786	2145	4x4	LTE B66	20	67236	2190	2x2	LTE B2	20	900	1960	2x2	LTE B48	20	55990	3625	4x4	LTE B48	20	56188	3644.8	4x4	-	-	-	-	-	24.40	24.54
CA_2A-[48C]-66A-[66A]	LTE B66	10	132322	1745	QPSK	1	0	66786	2145	2x2	LTE B66	20	67236	2190	4x4	LTE B2	20	900	1960	2x2	LTE B48	20	55990	3625	4x4	LTE B48	20	56188	3644.8	4x4	-	-	-	-	-	24.48	24.54
CA_[2A]-[48D]-[66A]	LTE B66	10	132322	1745	QPSK	1	0	66786	2145	4x4	LTE B2	20	900	1960	4x4	LTE B48	20	55990	3625	4x4	LTE B48	20	56188	3644.8	4x4	LTE B48	20	56386	3664.6	4x4	-	-	-	-	-	24.39	24.54
CA_[2A]-5A-30A-66A-66A	LTE B66	10	132322	1745	QPSK	1	0	66786	2145	2x2	LTE B66	20	67236	2190	2x2	LTE B2	20	900	1960	4x4	LTE B5	10	2525	881.5	2x2	LTE B30	10	9820	2355	2x2	-	-	-	-	-	24.48	24.54
CA_2A-[5A]-30A-66A-66A	LTE B66	10	132322	1745	QPSK	1	0	66786	2145	2x2	LTE B66	20	67236	2190	2x2	LTE B2	20	900	1960	2x2	LTE B5	10	2525	881.5	4x4	LTE B30	10	9820	2355	2x2	-	-	-	-	-	24.47	24.54
CA_2A-5A-30A-66A-[66A]	LTE B66	10	132322	1745	QPSK	1	0	66786	2145	2x2	LTE B66	20	67236	2190	4x4	LTE B2	20	900	1960	2x2	LTE B5	10	2525	881.5	2x2	LTE B30	10	9820	2355	2x2	-	-	-	-	-	24.50	24.54
CA_2A-5A-30A-[66A]-66A	LTE B66	10	132322	1745	QPSK	1	0	66786	2145	4x4	LTE B66	20	67236	2190	2x2	LTE B2	20	900	1960	2x2	LTE B5	10	2525	881.5	2x2	LTE B30	10	9820	2355	2x2	-	-	-	-	-	24.42	24.54
CA_[2A]-[5A]-30A-66A-66A	LTE B66	10	132322	1745	QPSK	1	0	66786	2145	2x2	LTE B66	20	67236	2190	2x2	LTE B2	20	900	1960	4x4	LTE B5	10	2525	881.5	4x4	LTE B30	10	9820	2355	2x2	-	-	-	-	-	24.45	24.54
CA_[2A]-5A-30A-66A-[66A]	LTE B66	10	132322	1745	QPSK	1	0	66786	2145	2x2	LTE B66	20	67236	2190	4x4	LTE B2	20	900	1960	4x4	LTE B5	10	2525	881.5	2x2	LTE B30	10	9820	2355	2x2	-	-	-	-	-	24.47	24.54
CA_[2A]-5A-30A-[66A]-66A	LTE B66	10	132322	1745	QPSK	1	0	66786	2145	4x4	LTE B66	20	67236	2190	2x2	LTE B2	20	900	1960	4x4	LTE B5	10	2525	881.5	2x2	LTE B30	10	9820	2355	2x2	-	-	-	-	-	24.43	24.54
CA_2A-[5A]-30A-[66A]-66A	LTE B66	10	132322	1745	QPSK	1	0	66786	2145	4x4	LTE B66	20	67236	2190	2x2	LTE B2	20	900	1960	2x2	LTE B5	10	2525	881.5	4x4	LTE B30	10	9820	2355	2x2	-	-	-	-	-	24.43	24.54
CA_2A-[5A]-30A-66A-[66A]	LTE B66	10	132322	1745	QPSK	1	0	66786	2145	2x2	LTE B66	20	67236	2190	4x4	LTE B2	20	900	1960	2x2	LTE B5	10	2525	881.5	4x4	LTE B30	10	9820	2355	2x2	-	-	-	-	-	24.40	24.54
CA_2A-5A-30A-[66A]-[66A]	LTE B66	10	132322	1745	QPSK	1	0	66786	2145	4x4	LTE B66	20	67236	2190	4x4	LTE B2	20	900	1960	2x2	LTE B5	10	2525	881.5	2x2	LTE B30	10	9820	2355	2x2	-	-	-	-	-	24.41	24.54
CA_[2A]-[5A]-30A-[66A]-66A	LTE B66	10	132322	1745	QPSK	1	0	66786	2145	4x4	LTE B66	20	67236	2190	2x2	LTE B2	20	900	1960	4x4	LTE B5	10	2525	881.5	4x4	LTE B30	10	9820	2355	2x2	-	-	-	-	-	24.44	24.54
CA_[2A]-[5A]-30A-66A-[66A]	LTE B66	10	132322	1745	QPSK	1	0	66786	2145	2x2	LTE B66	20	67236	2190	4x4	LTE B2	20	900	1960	4x4	LTE B5	10	2525	881.5	4x4	LTE B30	10	9820	2355	2x2	-	-	-	-	-	24.41	24.54
CA_[2A]-5A-30A-[66A]-[66A]	LTE B66	10	132322	1745	QPSK	1	0	66786	2145	4x4	LTE B66	20	67236	2190	4x4	LTE B2	20	900	1960	4x4	LTE B5	10	2525	881.5	2x2	LTE B30	10	9820	2355	2x2	-	-	-	-	-	24.40	24.54
CA_2A-[5A]-30A-[66A]-[66A]	LTE B66	10	132322	1745	QPSK	1	0	66786	2145	4x4	LTE B66	20	67236	2190	4x4	LTE B2	20	900	1960	2x2	LTE B5	10	2525	881.5	4x4	LTE B30	10	9820	2355	2x2	-	-	-	-	-	24.45	24.54
CA_[2A]-[5A]-30A-[66A]-[66A]	LTE B66	10	132322	1745	QPSK	1	0	66786	2145	4x4	LTE B66	20	67236	2190	4x4	LTE B2	20	900	1960	4x4	LTE B5	10	2525	881.5	4x4	LTE B30	10	9820	2355	2x2	-	-	-	-	-	24.49	24.54
CA_[2A]-5A-48A-66A-66A	LTE B66	10	132322	1745	QPSK	1	0	66786	2145	2x2	LTE B66	20	67236	2190	2x2	LTE B2	20	900	1960	4x4	LTE B5	10	2525	881.5	2x2	LTE B48	20	55990	3625	2x2	-	-	-	-	-	24.53	24.54
CA_2A-[5A]-48A-66A-66A	LTE B66	10	132322	1745	QPSK	1	0	66786	2145	2x2	LTE B66	20	67236	2190	2x2	LTE B2	20	900	1960	2x2	LTE B5	10	2525	881.5	4x4	LTE B48	20	55990	3625	2x2	-	-	-	-	-	24.50	24.54
CA_2A-5A-[48A]-66A-66A	LTE B66	10	132322	1745	QPSK	1	0	66786	2145	2x2	LTE B66	20	67236	2190	2x2	LTE B2	20	900	1960	2x2	LTE B5	10	2525	881.5	2x2	LTE B48	20	55990	3625	4x4	-	-	-	-	-	24.51	24.54
CA_2A-5A-48A-[66A]-66A	LTE B66	10	132322	1745	QPSK	1	0	66786	2145	4x4	LTE B66	20	67236	2190	2x2	LTE B2	20	900	1960	2x2	LTE B5	10	2525	881.5	2x2	LTE B48	20	55990	3625	2x2	-	-	-	-	-	24.41	24.54
CA_2A-5A-48A-66A-[66A]	LTE B66	10	132322	1745	QPSK	1	0	66786	2145	2x2	LTE B66	20	67236	2190	4x4	LTE B2	20	900	1960	2x2	LTE B5	10	2525	881.5	2x2	LTE B48	20	55990	3625	2x2	-	-	-	-	-	24.54	24.54
CA_[2A]-[5A]-48A-66A-66A	LTE B66	10	132322	1745	QPSK	1	0	66786	2145	2x2	LTE B66	20	67236	2190	2x2	LTE B2	20	900	1960	4x4	LTE B5	10	2525	881.5	4x4	LTE B48	20	55990	3625	2x2	-	-	-	-	-	24.52	24.54
CA_[2A]-5A-[48A]-66A-66A	LTE B66	10	132322	1745	QPSK	1	0	66786	2145	2x2	LTE B66	20	67236	2190	2x2	LTE B2	20	900	1960	4x4	LTE B5	10	2525	881.5	2x2	LTE B48	20	55990	3625	4x4	-	-	-	-	-	24.53	24.54
CA_[2A]-5A-48A-[66A]-66A	LTE B66	10	132322	1745	QPSK	1	0	66786	2145	4x4	LTE B66	20	67236	2190	2x2	LTE B2	20	900	1960	4x4	LTE B5	10	2525	881.5	2x2	LTE B48	20	55990	3625	2x2	-	-	-	-	-	24.43	24.54
CA_[2A]-5A-48A-66A-[66A]	LTE B66	10	132322	1745	QPSK	1	0	66786	2145	2x2	LTE B66	20	67236	2190	4x4	LTE B2	20	900	1960	4x4	LTE B5	10	2525	881.5	2x2	LTE B48	20	55990	3625	2x2	-	-	-	-	-	24.50	24.54
CA_2A-[5A]-[48A]-66A-66A	LTE B66	10	132322	1745	QPSK	1	0	66786	2145	2x2	LTE B66	20	67236	2190	2x2	LTE B2	20	900	1960	2x2	LTE B5	10	2525	881.5	4x4	LTE B48	20	55990	3625	4x4	-	-	-	-	-	24.50	24.54
CA_2A-[5A]-48A-[66A]-66A	LTE B66	10	132322	1745	QPSK	1	0	66786	2145	4x4	LTE B66	20	67236	2190	2x2	LTE B2	20	900	1960	2x2	LTE B5	10	2525	881.5	4x4	LTE B48	20	55990	3625	2x2	-	-	-	-	-	24.49	24.54
CA_2A-[5A]-48A-66A-[66A]	LTE B66	10	132322	1745	QPSK	1	0	66786	2145	2x2	LTE B66	20	67236	2190	4x4	LTE B2	20	900	1960	2x2	LTE B5	10	2525	881.5	4x4	LTE B48	20	55990	3625	2x2	-	-	-	-	-	24.43	24.54
CA_2A-5A-[48A]-[66A]-66A	LTE B66	10	132322	1745	QPSK	1	0	66786	2145	4x4	LTE B66	20	67236	2190	2x2	LTE B2	20	900	1960	2x2	LTE B5	10	2525	881.5	2x2	LTE B48	20	55990	3625	4x4	-	-	-	-	-	24.42	24.54
CA_2A-5A-[48A]-66A-[66A]	LTE B66	10	132322	1745	QPSK	1	0	66786	2145	2x2	LTE B66	20	67236	2190	4x4	LTE B2	20	900	1960	2x2	LTE B5	10	2525	881.5	2x2	LTE B48	20	55990	3625	4x4	-	-	-	-	-	24.51	24.54
CA_2A-5A-48A-[66A]-[66A]	LTE B66	10	132322	1745	QPSK	1	0	66786	2145	4x4	LTE B66	20	67236	2190	4x4	LTE B2	20	900	1960	2x2	LTE B5	10	2525	881.5	2x2	LTE B48	20	55990	3625	2x2	-	-	-	-	-	24.40	24.54
CA_[2A]-[5A]-[48A]-66A-66A	LTE B66	10	132322	1745	QPSK	1	0	66786	2145	2x2	LTE B66	20	67236	2190	2x2	LTE B2	20	900	1960	4x4	LTE B5	10	2525	881.5	4x4	LTE B48	20	55990	3625	4x4	-	-	-	-	-	24.48	24.54
CA_[2A]-[5A]-48A-[66A]-66A	LTE B66	10	132322	1745	QPSK	1	0	66786	2145	4x4	LTE B66	20	67236	2190	2x2	LTE B2	20	900	1960	4x4	LTE B5	10	2525	881.5	4x4	LTE B48	20	55990	3625	2x2	-	-	-	-	-	24.44	24.54
CA_[2A]-[5A]-48A-66A-[66A]	LTE B66	10	132322	1745	QPSK	1	0	66786	2145	2x2	LTE B66	20	67236	2190	4x4	LTE B2	20	900	1960	4x4	LTE B5	10	2525	881.5	4x4	LTE B48	20	55990	3625	2x2	-	-	-	-	-	24.52	24.54
CA_[2A]-5A-[48A]-[66A]-66A	LTE B66	10	132322	1745	QPSK	1	0	66786	2145	4x4	LTE B66	20	67236	2190	2x2	LTE B2	20	900	1960	4x4	LTE B5	10	2525	881.5	2x2	LTE B48	20	55990	3625	4x4	-	-	-	-	-	24.40	24.54
CA_[2A]-5A-[48A]-66A-[66A]	LTE B66	10	132322	1745	QPSK	1	0	66786	2145	2x2	LTE B66	20	67236	2190	4x4	LTE B2	20	900	1960	4x4	LTE B5	10	2525	881.5	2x2	LTE B48	20	55990	3625	4x4	-	-	-	-	-	24.49	24.54
CA_[2A]-5A-48A-[66A]-[66A]	LTE B66	10	132322	1745	QPSK	1	0	66786	2145	4x4	LTE B66	20	67236	2190	4x4	LTE B2	20	900	1960	4x4	LTE B5	10	2525	881.5	2x2	LTE B48	20	55990	3625	2x2	-	-	-	-	-	24.41	24.54
CA_2A-[5A]-[48A]-[66A]-66A	LTE B66	10	132322	1745	QPSK	1	0	66786	2145	4x4	LTE B66	20	67236	2190	2x2	LTE B2	20	900	1960	2x2	LTE B5	10	2525	881.5	4x4	LTE B48	20	55990	3625	4x4	-	-	-	-	-	24.40	24.54
CA_2A-[5A]-[48A]-66A-[66A]	LTE B66	10	132322	1745	QPSK	1	0	66786	2145	2x2	LTE B66	20	67236	2190	4x4	LTE B2	20	900	1960	2x2	LTE B5	10	2525	881.5	4x4	LTE B48	20	55990	3625	4x4	-	-	-	-	-	24.50	24.54
CA_2A-[5A]-48A-[66A]-[66A]	LTE B66	10	132322	1745	QPSK	1	0	66786	2145	4x4	LTE B66	20	67236	2190	4x4	LTE B2	20	900	1960	2x2	LTE B5	10	2525	881.5	4x4	LTE B48	20	55990	3625	2x2	-	-	-	-	-	24.48	24.54
CA_2A-5A-[48A]-[66A]-[66A]	LTE B66	10	132322	1745	QPSK	1	0	66786	2145	4x4	LTE B66	20	67236	2190	4x4	LTE B2	20	900	1960	2x2	LTE B5	10	2525	881.5	2x2	LTE B48	20	55990	3625	4x4	-	-	-	-	-	24.42	24.54
CA_[2A]-[5A]-[48A]-[66A]-66A	LTE B66	10	132322	1745	QPSK	1	0	66786	2145	4x4	LTE B66	20	67236	2190	2x2	LTE B2	20	900	1960	4x4	LTE B5	10	2525	881.5	4x4	LTE B48	20	55990	3625	4x4	-	-	-	-	-	24.45	24.54
CA_[2A]-[5A]-[48A]-66A-[66A]	LTE B66	10	132322	1745	QPSK	1	0	66786	2145	2x2	LTE B66	20	67236	2190	4x4	LTE B2	20	900	1960	4x4	LTE B5	10	2525	881.5	4x4	LTE B48	20	55990	3625	4x4	-	-	-	-	-	24.44	24.54
CA_[2A]-[5A]-48A-[66A]-[66A]	LTE B66	10	132322	1745	QPSK	1	0	66786	2145	4x4	LTE B66	20	67236	2190	4x4	LTE B2	20	900	1960	4x4	LTE B5	10	2525	881.5	4x4	LTE B48	20	55990	3625	2x2	-	-	-	-	-	24.43	24.54
CA_[2A]-5A-[48A]-[66A]-[66A]	LTE B66	10	132322	1745	QPSK	1	0	66786	2145	4x4	LTE B66	20	67236	2190	4x4	LTE B2	20	900	1960	4x4	LTE B5	10	2525	881.5	2x2	LTE B48	20	55990	3625	4x4	-	-	-	-	-	24.40	24.54
CA_2A-[5A]-[48A]-[66A]-[66A]	LTE B66	10	132322	1745	QPSK	1	0	66786	2145	4x4	LTE B66	20	67236	2190	4x4	LTE B2	20	900	1960	2x2	LTE B5	10	2525	881.5	4x4	LTE B48	20	55990	3625	4x4	-	-	-	-	-	24.42	24.54
CA_[2A]-[5A]-[48A]-[66A]-[66A]	LTE B66	10	132322	1745	QPSK	1	0	66786	2145	4x4	LTE B66	20	67236	2190	4x4	LTE B2	20	900	1960	4x4	LTE B5	10	2525	881.5	4x4	LTE B48	20	55990	3625	4x4	-	-	-	-	-	24.39	24.54
CA_[2A]-5A-48C-66A	LTE B66	10	132322	1745	QPSK	1	0	66786	2145	2x2	LTE B2	20	900	1960	4x4	LTE B5	10	2525	881.5	2x2	LTE B48	20	55990	3625	2x2	LTE B48	20	56188	3644.8	2x2	-	-	-	-	-	24.46	24.54
CA_2A-[5A]-48C-66A	LTE B66	10	132322	1745	QPSK	1	0	66786	2145	2x2	LTE B2	20	900	1960	2x2	LTE B5	10	2525	881.5	4x4	LTE B48	20	55990	3625	2x2	LTE B48	20	56188	3644.8	2x2	-	-	-	-	-	24.45	24.54
CA_2A-5A-[48C]-66A	LTE B66	10	132322	1745	QPSK	1	0	66786	2145	2x2	LTE B2	20	900	1960	2x2	LTE B5	10	2525	881.5	2x2	LTE B48	20	55990	3625	4x4	LTE B48	20	56188	3644.8	4x4	-	-	-	-	-	24.44	24.54
CA_2A-5A-48C-[66A]	LTE B66	10	132322	1745	QPSK	1	0	66786	2145	4x4	LTE B2	20	900	1960	2x2	LTE B5	10	2525	881.5	2x2	LTE B48	20	55990	3625	2x2	LTE B48	20	56188	3644.8	2x2	-	-	-	-	-	24.42	24.54
CA_[2A]-[5A]-48C-66A	LTE B66	10	132322	1745	QPSK	1	0	66786	2145	2x2	LTE B2	20	900	1960	4x4	LTE B5	10	2525	881.5	4x4	LTE B48	20	55990	3625	2x2	LTE B48	20	56188	3644.8	2x2	-	-	-	-	-	24.45	24.54
CA_[2A]-5A-[48C]-66A	LTE B66	10	132322	1745	QPSK	1	0	66786	2145	2x2	LTE B2	20	900	1960	4x4	LTE B5	10	2525	881.5	2x2	LTE B48	20	55990	3625	4x4	LTE B48	20	56188	3644.8	4x4	-	-	-	-	-	24.47	24.54
CA_[2A]-5A-48C-[66A]	LTE B66	10	132322	1745	QPSK	1	0	66786	2145	4x4	LTE B2	20	900	1960	4x4	LTE B5	10	2525	881.5	2x2	LTE B48	20	55990	3625	2x2	LTE B48	20	56188	3644.8	2x2	-	-	-	-	-	24.40	24.54
CA_2A-[5A]-[48C]-66A	LTE B66	10	132322	1745	QPSK	1	0	66786	2145	2x2	LTE B2	20	900	1960	2x2	LTE B5	10	2525	881.5	4x4	LTE B48	20	55990	3625	4x4	LTE B48	20	56188	3644.8	4x4	-	-	-	-	-	24.46	24.54
CA_2A-[5A]-48C-[66A]	LTE B66	10	132322	1745	QPSK	1	0	66786	2145	4x4	LTE B2	20	900	1960	2x2	LTE B5	10	2525	881.5	4x4	LTE B48	20	55990	3625	2x2	LTE B48	20	56188	3644.8	2x2	-	-	-	-	-	24.41	24.54
CA_2A-5A-[48C]-[66A]	LTE B66	10	132322	1745	QPSK	1	0	66786	2145	4x4	LTE B2	20	900	1960	2x2	LTE B5	10	2525	881.5	2x2	LTE B48	20	55990	3625	4x4	LTE B48	20	56188	3644.8	4x4	-	-	-	-	-	24.40	24.54
CA_[2A]-[5A]-[48C]-66A	LTE B66	10	132322	1745	QPSK	1	0	66786	2145	2x2	LTE B2	20	900	1960	4x4	LTE B5	10	2525	881.5	4x4	LTE B48	20	55990	3625	4x4	LTE B48	20	56188	3644.8	4x4	-	-	-	-	-	24.43	24.54
CA_[2A]-[5A]-48C-[66A]	LTE B66	10	132322	1745	QPSK	1	0	66786	2145	4x4	LTE B2	20	900	1960	4x4	LTE B5	10	2525	881.5	4x4	LTE B48	20	55990	3625	2x2	LTE B48	20	56188	3644.8	2x2	-	-	-	-	-	24.39	24.54
CA_[2A]-5A-[48C]-[66A]	LTE B66	10	132322	1745	QPSK	1	0	66786	2145	4x4	LTE B2	20	900	1960	4x4	LTE B5	10	2525	881.5	2x2	LTE B48	20	55990	3625	4x4	LTE B48	20	56188	3644.8	4x4	-	-	-	-	-	24.42	24.54
CA_2A-[5A]-[48C]-[66A]	LTE B66	10	132322	1745	QPSK	1	0	66786	2145	4x4	LTE B2	20	900	1960	2x2	LTE B5	10	2525	881.5	4x4	LTE B48	20	55990	3625	4x4	LTE B48	20	56188	3644.8	4x4	-	-	-	-	-	24.40	24.54
CA_[2A]-[5A]-[48C]-[66A]	LTE B66	10	132322	1745	QPSK	1	0	66786	2145	4x4	LTE B2	20	900	1960	4x4	LTE B5	10	2525	881.5	4x4	LTE B48	20	55990	3625	4x4	LTE B48	20	56188	3644.8	4x4	-	-	-	-	-	24.40	24.54
CA_[2A]-5B-30A-66A	LTE B66	10	132322	1745	QPSK	1	0	66786	2145	2x2	LTE B2	20	900	1960	4x4	LTE B5	10	2525	881.5	2x2	LTE B5	5	2453	874.3	2x2	LTE B30	10	9820	2355	2x2	-	-	-	-	-	24.47	24.54
CA_2A-[5B]-30A-66A	LTE B66	10	132322	1745	QPSK	1	0	66786	2145	2x2	LTE B2	20	900	1960	2x2	LTE B5	10	2525	881.5	4x4	LTE B5	5	2453	874.3	4x4	LTE B30	10	9820	2355	2x2	-	-	-	-	-	24.45	24.54
CA_2A-5B-30A-[66A]	LTE B66	10	132322	1745	QPSK	1	0	66786	2145	4x4	LTE B2	20	900	1960	2x2	LTE B5	10	2525	881.5	2x2	LTE B5	5	2453	874.3	2x2	LTE B30	10	9820	2355	2x2	-	-	-	-	-	24.42	24.54
CA_[2A]-[5B]-30A-66A	LTE B66	10	132322	1745	QPSK	1	0	66786	2145	2x2	LTE B2	20	900	1960	4x4	LTE B5	10	2525	881.5	4x4	LTE B5	5	2453	874.3	4x4	LTE B30	10	9820	2355	2x2	-	-	-	-	-	24.41	24.54
CA_[2A]-5B-30A-[66A]	LTE B66	10	132322	1745	QPSK	1	0	66786	2145	4x4	LTE B2	20	900	1960	4x4	LTE B5	10	2525	881.5	2x2	LTE B5	5	2453	874.3	2x2	LTE B30	10	9820	2355	2x2	-	-	-	-	-	24.43	24.54
CA_2A-[5B]-30A-[66A]	LTE B66	10	132322	1745	QPSK	1	0	66786	2145	4x4	LTE B2	20	900	1960	2x2	LTE B5	10	2525	881.5	4x4	LTE B5	5	2453	874.3	4x4	LTE B30	10	9820	2355	2x2	-	-	-	-	-	24.43	24.54
CA_[2A]-[5B]-30A-[66A]	LTE B66	10	132322	1745	QPSK	1	0	66786	2145	4x4	LTE B2	20	900	1960	4x4	LTE B5	10	2525	881.5	4x4	LTE B5	5	2453	874.3	4x4	LTE B30	10	9820	2355	2x2	-	-	-	-	-	24.42	24.54
CA_[2A]-5B-66A-66A	LTE B66	10	132322	1745	QPSK	1	0	66786	2145	2x2	LTE B66	20	67236	2190	2x2	LTE B2	20	900	1960	4x4	LTE B5	10	2525	881.5	2x2	LTE B5	5	2453	874.3	2x2	-	-	-	-	-	24.51	24.54
CA_2A-[5B]-66A-66A	LTE B66	10	132322	1745	QPSK	1	0	66786	2145	2x2	LTE B66	20	67236	2190	2x2	LTE B2	20	900	1960	2x2	LTE B5	10	2525	881.5	4x4	LTE B5	5	2453	874.3	4x4	-	-	-	-	-	24.48	24.54
CA_2A-5B-66A-[66A]	LTE B66	10	132322	1745	QPSK	1	0	66786	2145	2x2	LTE B66	20	67236	2190	4x4	LTE B2	20	900	1960	2x2	LTE B5	10	2525	881.5	2x2	LTE B5	5	2453	874.3	2x2	-	-	-	-	-	24.50	24.54
CA_2A-5B-[66A]-66A	LTE B66	10	132322	1745	QPSK	1	0	66786	2145	4x4	LTE B66	20	67236	2190	2x2	LTE B2	20	900	1960	2x2	LTE B5	10	2525	881.5	2x2	LTE B5	5	2453	874.3	2x2	-	-	-	-	-	24.40	24.54
CA_[2A]-[5B]-66A-66A	LTE B66	10	132322	1745	QPSK	1	0	66786	2145	2x2	LTE B66	20	67236	2190	2x2	LTE B2	20	900	1960	4x4	LTE B5	10	2525	881.5	4x4	LTE B5	5	2453	874.3	4x4	-	-	-	-	-	24.50	24.54
CA_[2A]-5B-66A-[66A]	LTE B66	10	132322	1745	QPSK	1	0	66786	2145	2x2	LTE B66	20	67236	2190	4x4	LTE B2	20	900	1960	4x4	LTE B5	10	2525	881.5	2x2	LTE B5	5	2453	874.3	2x2	-	-	-	-	-	24.45	24.54
CA_[2A]-5B-[66A]-66A	LTE B66	10	132322	1745	QPSK	1	0	66786	2145	4x4	LTE B66	20	67236	2190	2x2	LTE B2	20	900	1960	4x4	LTE B5	10	2525	881.5	2x2	LTE B5	5	2453	874.3	2x2	-	-	-	-	-	24.41	24.54
CA_2A-[5B]-[66A]-66A	LTE B66	10	132322	1745	QPSK	1	0	66786	2145	4x4	LTE B66	20	67236	2190	2x2	LTE B2	20	900	1960	2x2	LTE B5	10	2525	881.5	4x4	LTE B5	5	2453	874.3	4x4	-	-	-	-	-	24.43	24.54
CA_2A-[5B]-66A-[66A]	LTE B66	10	132322	1745	QPSK	1	0	66786	2145	2x2	LTE B66	20	67236	2190	4x4	LTE B2	20	900	1960	2x2	LTE B5	10	2525	881.5	4x4	LTE B5	5	2453	874.3	4x4	-	-	-	-	-	24.46	24.54
CA_2A-5B-[66A]-[66A]	LTE B66	10	132322	1745	QPSK	1	0	66786	2145	4x4	LTE B66	20	67236	2190	4x4	LTE B2	20	900	1960	2x2	LTE B5	10	2525	881.5	2x2	LTE B5	5	2453	874.3	2x2	-	-	-	-	-	24.39	24.54
CA_[2A]-[5B]-[66A]-66A	LTE B66	10	132322	1745	QPSK	1	0	66786	2145	4x4	LTE B66	20	67236	2190	2x2	LTE B2	20	900	1960	4x4	LTE B5	10	2525	881.5	4x4	LTE B5	5	2453	874.3	4x4	-	-	-	-	-	24.41	24.54
CA_[2A]-[5B]-66A-[66A]	LTE B66	10	132322	1745	QPSK	1	0	66786	2145	2x2	LTE B66	20	67236	2190	4x4	LTE B2	20	900	1960	4x4	LTE B5	10	2525	881.5	4x4	LTE B5	5	2453	874.3	4x4	-	-	-	-	-	24.49	24.54
CA_[2A]-5B-[66A]-[66A]	LTE B66	10	132322	1745	QPSK	1	0	66786	2145	4x4	LTE B66	20	67236	2190	4x4	LTE B2	20	900	1960	4x4	LTE B5	10	2525	881.5	2x2	LTE B5	5	2453	874.3	2x2	-	-	-	-	-	24.40	24.54
CA_2A-[5B]-[66A]-[66A]	LTE B66	10	132322	1745	QPSK	1	0	66786	2145	4x4	LTE B66	20	67236	2190	4x4	LTE B2	20	900	1960	2x2	LTE B5	10	2525	881.5	4x4	LTE B5	5	2453	874.3	4x4	-	-	-	-	-	24.42	24.54
CA_[2A]-[5B]-[66A]-[66A]	LTE B66	10	132322	1745	QPSK	1	0	66786	2145	4x4	LTE B66	20	67236	2190	4x4	LTE B2	20	900	1960	4x4	LTE B5	10	2525	881.5	4x4	LTE B5	5	2453	874.3	4x4	-	-	-	-	-	24.40	24.54
CA_[2A]-5B-66B	LTE B66	10	132322	1745	QPSK	1	0	66786	2145	2x2	LTE B66	10	66687	2135.1	2x2	LTE B2	20	900	1960	4x4	LTE B5	10	2525	881.5	2x2	LTE B5	5	2453	874.3	2x2	-	-	-	-	-	24.47	24.54
CA_2A-[5B]-66B	LTE B66	10	132322	1745	QPSK	1	0	66786	2145	2x2	LTE B66	10	66687	2135.1	2x2	LTE B2	20	900	1960	2x2	LTE B5	10	2525	881.5	4x4	LTE B5	5	2453	874.3	4x4	-	-	-	-	-	24.49	24.54
CA_2A-5B-[66B]	LTE B66	10	132322	1745	QPSK	1	0	66786	2145	4x4	LTE B66	10	66687	2135.1	4x4	LTE B2	20	900	1960	2x2	LTE B5	10	2525	881.5	2x2	LTE B5	5	2453	874.3	2x2	-	-	-	-	-	24.41	24.54
CA_[2A]-[5B]-66B	LTE B66	10	132322	1745	QPSK	1	0	66786	2145	2x2	LTE B66	10	66687	2135.1	2x2	LTE B2	20	900	1960	4x4	LTE B5	10	2525	881.5	4x4	LTE B5	5	2453	874.3	4x4	-	-	-	-	-	24.44	24.54
CA_[2A]-5B-[66B]	LTE B66	10	132322	1745	QPSK	1	0	66786	2145	4x4	LTE B66	10	66687	2135.1	4x4	LTE B2	20	900	1960	4x4	LTE B5	10	2525	881.5	2x2	LTE B5	5	2453	874.3	2x2	-	-	-	-	-	24.40	24.54
CA_2A-[5B]-[66B]	LTE B66	10	132322	1745	QPSK	1	0	66786	2145	4x4	LTE B66	10	66687	2135.1	4x4	LTE B2	20	900	1960	2x2	LTE B5	10	2525	881.5	4x4	LTE B5	5	2453	874.3	4x4	-	-	-	-	-	24.39	24.54
CA_[2A]-[5B]-[66B]	LTE B66	10	132322	1745	QPSK	1	0	66786	2145	4x4	LTE B66	10	66687	2135.1	4x4	LTE B2	20	900	1960	4x4	LTE B5	10	2525	881.5	4x4	LTE B5	5	2453	874.3	4x4	-	-	-	-	-	24.43	24.54
CA_[2A]-5B-66C	LTE B66	10	132322	1745	QPSK	1	0	66786	2145	2x2	LTE B66	20	66642	2130.6	2x2	LTE B2	20	900	1960	4x4	LTE B5	10	2525	881.5	2x2	LTE B5	5	2453	874.3	2x2	-	-	-	-	-	24.43	24.54
CA_2A-[5B]-66C	LTE B66	10	132322	1745	QPSK	1	0	66786	2145	2x2	LTE B66	20	66642	2130.6	2x2	LTE B2	20	900	1960	2x2	LTE B5	10	2525	881.5	4x4	LTE B5	5	2453	874.3	4x4	-	-	-	-	-	24.47	24.54
CA_2A-5B-[66C]	LTE B66	10	132322	1745	QPSK	1	0	66786	2145	4x4	LTE B66	20	66642	2130.6	4x4	LTE B2	20	900	1960	2x2	LTE B5	10	2525	881.5	2x2	LTE B5	5	2453	874.3	2x2	-	-	-	-	-	24.40	24.54
CA_[2A]-[5B]-66C	LTE B66	10	132322	1745	QPSK	1	0	66786	2145	2x2	LTE B66	20	66642	2130.6	2x2	LTE B2	20	900	1960	4x4	LTE B5	10	2525	881.5	4x4	LTE B5	5	2453	874.3	4x4	-	-	-	-	-	24.48	24.54
CA_[2A]-5B-[66C]	LTE B66	10	132322	1745	QPSK	1	0	66786	2145	4x4	LTE B66	20	66642	2130.6	4x4	LTE B2	20	900	1960	4x4	LTE B5	10	2525	881.5	2x2	LTE B5	5	2453	874.3	2x2	-	-	-	-	-	24.40	24.54
CA_2A-[5B]-[66C]	LTE B66	10	132322	1745	QPSK	1	0	66786	2145	4x4	LTE B66	20	66642	2130.6	4x4	LTE B2	20	900	1960	2x2	LTE B5	10	2525	881.5	4x4	LTE B5	5	2453	874.3	4x4	-	-	-	-	-	24.41	24.54
CA_[2A]-[5B]-[66C]	LTE B66	10	132322	1745	QPSK	1	0	66786	2145	4x4	LTE B66	20	66642	2130.6	4x4	LTE B2	20	900	1960	4x4	LTE B5	10	2525	881.5	4x4	LTE B5	5	2453	874.3	4x4	-	-	-	-	-	24.40	24.54
CA_46A-46D-[66A]	LTE B66	10	132322	1745	QPSK	1	0	66786	2145	4x4	LTE B46	20	50665	5537.5	2x2	LTE B46	20	53540	5825	2x2	LTE B46	20	53342	5805.2	2x2	LTE B46	20	53144	5785.4	2x2	-	-	-	-	-	24.42	24.54
CA_46A-[48D]-66A	LTE B66	10	132322	1745	QPSK	1	0	66786	2145	2x2	LTE B46	20	50665	5537.5	2x2	LTE B48	20	55990	3625	4x4	LTE B48	20	56188	3644.8	4x4	LTE B48	20	56386	3664.6	4x4	-	-	-	-	-	24.44	24.54
CA_46A-48D-[66A]	LTE B66	10	132322	1745	QPSK	1	0	66786	2145	4x4	LTE B46	20	50665	5537.5	2x2	LTE B48	20	55990	3625	2x2	LTE B48	20	56188	3644.8	2x2	LTE B48	20	56386	3664.6	2x2	-	-	-	-	-	24.40	24.54
CA_46A-[48D]-[66A]	LTE B66	10	132322	1745	QPSK	1	0	66786	2145	4x4	LTE B46	20	50665	5537.5	2x2	LTE B48	20	55990	3625	4x4	LTE B48	20	56188	3644.8	4x4	LTE B48	20	56386	3664.6	4x4	-	-	-	-	-	24.43	24.54
CA_46C-[48C]-66A	LTE B66	10	132322	1745	QPSK	1	0	66786	2145	2x2	LTE B46	20	50665	5537.5	2x2	LTE B46	20	50467	5517.7	2x2	LTE B48	20	55990	3625	4x4	LTE B48	20	56188	3644.8	4x4	-	-	-	-	-	24.43	24.54
CA_46C-48C-[66A]	LTE B66	10	132322	1745	QPSK	1	0	66786	2145	4x4	LTE B46	20	50665	5537.5	2x2	LTE B46	20	50467	5517.7	2x2	LTE B48	20	55990	3625	2x2	LTE B48	20	56188	3644.8	2x2	-	-	-	-	-	24.41	24.54
CA_46C-[48C]-[66A]	LTE B66	10	132322	1745	QPSK	1	0	66786	2145	4x4	LTE B46	20	50665	5537.5	2x2	LTE B46	20	50467	5517.7	2x2	LTE B48	20	55990	3625	4x4	LTE B48	20	56188	3644.8	4x4	-	-	-	-	-	24.39	24.54
CA_46D-[48A]-66A	LTE B66	10	132322	1745	QPSK	1	0	66786	2145	2x2	LTE B46	20	50665	5537.5	2x2	LTE B46	20	50467	5517.7	2x2	LTE B46	20	50863	5557.3	2x2	LTE B48	20	55990	3625	4x4	-	-	-	-	-	24.53	24.54
CA_46D-48A-[66A]	LTE B66	10	132322	1745	QPSK	1	0	66786	2145	4x4	LTE B46	20	50665	5537.5	2x2	LTE B46	20	50467	5517.7	2x2	LTE B46	20	50863	5557.3	2x2	LTE B48	20	55990	3625	2x2	-	-	-	-	-	24.43	24.54
CA_46D-[48A]-[66A]	LTE B66	10	132322	1745	QPSK	1	0	66786	2145	4x4	LTE B46	20	50665	5537.5	2x2	LTE B46	20	50467	5517.7	2x2	LTE B46	20	50863	5557.3	2x2	LTE B48	20	55990	3625	4x4	-	-	-	-	-	24.44	24.54
CA_46D-66A-[66A]	LTE B66	10	132322	1745	QPSK	1	0	66786	2145	2x2	LTE B66	20	67236	2190	4x4	LTE B46	20	50665	5537.5	2x2	LTE B46	20	50467	5517.7	2x2	LTE B46	20	50863	5557.3	2x2	-	-	-	-	-	24.46	24.54
CA_46D-[66A]-66A	LTE B66	10	132322	1745	QPSK	1	0	66786	2145	4x4	LTE B66	20	67236	2190	2x2	LTE B46	20	50665	5537.5	2x2	LTE B46	20	50467	5517.7	2x2	LTE B46	20	50863	5557.3	2x2	-	-	-	-	-	24.42	24.54
CA_46D-[66A]-[66A]	LTE B66	10	132322	1745	QPSK	1	0	66786	2145	4x4	LTE B66	20	67236	2190	4x4	LTE B46	20	50665	5537.5	2x2	LTE B46	20	50467	5517.7	2x2	LTE B46	20	50863	5557.3	2x2	-	-	-	-	-	24.41	24.54
CA_[48A]-48C-66B	LTE B66	10	132322	1745	QPSK	1	0	66786	2145	2x2	LTE B66	10	66687	2135.1	2x2	LTE B48	20	55990	3625	4x4	LTE B48	20	55340	3560	2x2	LTE B48	20	55538	3579.8	2x2	-	-	-	-	-	24.44	24.54
CA_48A-[48C]-66B	LTE B66	10	132322	1745	QPSK	1	0	66786	2145	2x2	LTE B66	10	66687	2135.1	2x2	LTE B48	20	55990	3625	2x2	LTE B48	20	55340	3560	4x4	LTE B48	20	55538	3579.8	4x4	-	-	-	-	-	24.47	24.54
CA_48A-48C-[66B]	LTE B66	10	132322	1745	QPSK	1	0	66786	2145	4x4	LTE B66	10	66687	2135.1	4x4	LTE B48	20	55990	3625	2x2	LTE B48	20	55340	3560	2x2	LTE B48	20	55538	3579.8	2x2	-	-	-	-	-	24.40	24.54
CA_[48A]-[48C]-66B	LTE B66	10	132322	1745	QPSK	1	0	66786	2145	2x2	LTE B66	10	66687	2135.1	2x2	LTE B48	20	55990	3625	4x4	LTE B48	20	55340	3560	4x4	LTE B48	20	55538	3579.8	4x4	-	-	-	-	-	24.45	24.54
CA_[48A]-48C-[66B]	LTE B66	10	132322	1745	QPSK	1	0	66786	2145	4x4	LTE B66	10	66687	2135.1	4x4	LTE B48	20	55990	3625	4x4	LTE B48	20	55340	3560	2x2	LTE B48	20	55538	3579.8	2x2	-	-	-	-	-	24.43	24.54
CA_48A-[48C]-[66B]	LTE B66	10	132322	1745	QPSK	1	0	66786	2145	4x4	LTE B66	10	66687	2135.1	4x4	LTE B48	20	55990	3625	2x2	LTE B48	20	55340	3560	4x4	LTE B48	20	55538	3579.8	4x4	-	-	-	-	-	24.42	24.54
CA_[48A]-[48C]-[66B]	LTE B66	10	132322	1745	QPSK	1	0	66786	2145	4x4	LTE B66	10	66687	2135.1	4x4	LTE B48	20	55990	3625	4x4	LTE B48	20	55340	3560	4x4	LTE B48	20	55538	3579.8	4x4	-	-	-	-	-	24.40	24.54
CA_[48A]-48C-66C	LTE B66	10	132322	1745	QPSK	1	0	66786	2145	2x2	LTE B66	20	66642	2130.6	2x2	LTE B48	20	55990	3625	4x4	LTE B48	20	55340	3560	2x2	LTE B48	20	55538	3579.8	2x2	-	-	-	-	-	24.44	24.54
CA_48A-[48C]-66C	LTE B66	10	132322	1745	QPSK	1	0	66786	2145	2x2	LTE B66	20	66642	2130.6	2x2	LTE B48	20	55990	3625	2x2	LTE B48	20	55340	3560	4x4	LTE B48	20	55538	3579.8	4x4	-	-	-	-	-	24.45	24.54
CA_48A-48C-[66C]	LTE B66	10	132322	1745	QPSK	1	0	66786	2145	4x4	LTE B66	20	66642	2130.6	4x4	LTE B48	20	55990	3625	2x2	LTE B48	20	55340	3560	2x2	LTE B48	20	55538	3579.8	2x2	-	-	-	-	-	24.42	24.54
CA_[48A]-[48C]-66C	LTE B66	10	132322	1745	QPSK	1	0	66786	2145	2x2	LTE B66	20	66642	2130.6	2x2	LTE B48	20	55990	3625	4x4	LTE B48	20	55340	3560	4x4	LTE B48	20	55538	3579.8	4x4	-	-	-	-	-	24.43	24.54
CA_[48A]-48C-[66C]	LTE B66	10	132322	1745	QPSK	1	0	66786	2145	4x4	LTE B66	20	66642	2130.6	4x4	LTE B48	20	55990	3625	4x4	LTE B48	20	55340	3560	2x2	LTE B48	20	55538	3579.8	2x2	-	-	-	-	-	24.41	24.54
CA_48A-[48C]-[66C]	LTE B66	10	132322	1745	QPSK	1	0	66786	2145	4x4	LTE B66	20	66642	2130.6	4x4	LTE B48	20	55990	3625	2x2	LTE B48	20	55340	3560	4x4	LTE B48	20	55538	3579.8	4x4	-	-	-	-	-	24.43	24.54
CA_[48A]-[48C]-[66C]	LTE B66	10	132322	1745	QPSK	1	0	66786	2145	4x4	LTE B66	20	66642	2130.6	4x4	LTE B48	20	55990	3625	4x4	LTE B48	20	55340	3560	4x4	LTE B48	20	55538	3579.8	4x4	-	-	-	-	-	24.38	24.54
CA_[48A]-48D-66A	LTE B66	10	132322	1745	QPSK	1	0	66786	2145	2x2	LTE B48	20	55990	3625	4x4	LTE B48	20	56640	3690	2x2	LTE B48	20	56442	3670.2	2x2	LTE B48	20	56244	3650.4	2x2	-	-	-	-	-	24.47	24.54
CA_48A-[48D]-66A	LTE B66	10	132322	1745	QPSK	1	0	66786	2145	2x2	LTE B48	20	55990	3625	2x2	LTE B48	20	56640	3690	4x4	LTE B48	20	56442	3670.2	4x4	LTE B48	20	56244	3650.4	4x4	-	-	-	-	-	24.46	24.54
CA_48A-48D-[66A]	LTE B66	10	132322	1745	QPSK	1	0	66786	2145	4x4	LTE B48	20	55990	3625	2x2	LTE B48	20	56640	3690	2x2	LTE B48	20	56442	3670.2	2x2	LTE B48	20	56244	3650.4	2x2	-	-	-	-	-	24.40	24.54
CA_[48A]-[48D]-66A	LTE B66	10	132322	1745	QPSK	1	0	66786	2145	2x2	LTE B48	20	55990	3625	4x4	LTE B48	20	56640	3690	4x4	LTE B48	20	56442	3670.2	4x4	LTE B48	20	56244	3650.4	4x4	-	-	-	-	-	24.48	24.54
CA_[48A]-48D-[66A]	LTE B66	10	132322	1745	QPSK	1	0	66786	2145	4x4	LTE B48	20	55990	3625	4x4	LTE B48	20	56640	3690	2x2	LTE B48	20	56442	3670.2	2x2	LTE B48	20	56244	3650.4	2x2	-	-	-	-	-	24.41	24.54
CA_48A-[48D]-[66A]	LTE B66	10	132322	1745	QPSK	1	0	66786	2145	4x4	LTE B48	20	55990	3625	2x2	LTE B48	20	56640	3690	4x4	LTE B48	20	56442	3670.2	4x4	LTE B48	20	56244	3650.4	4x4	-	-	-	-	-	24.42	24.54
CA_[48A]-[48D]-[66A]	LTE B66	10	132322	1745	QPSK	1	0	66786	2145	4x4	LTE B48	20	55990	3625	4x4	LTE B48	20	56640	3690	4x4	LTE B48	20	56442	3670.2	4x4	LTE B48	20	56244	3650.4	4x4	-	-	-	-	-	24.43	24.54
CA_[48C]-48C-66A	LTE B66	10	132322	1745	QPSK	1	0	66786	2145	2x2	LTE B48	20	55990	3625	2x2	LTE B48	20	56188	3644.8	2x2	LTE B48	20	55340	3560	4x4	LTE B48	20	55538	3579.8	4x4	-	-	-	-	-	24.49	24.54
CA_48C-48C-[66A]	LTE B66	10	132322	1745	QPSK	1	0	66786	2145	4x4	LTE B48	20	55990	3625	2x2	LTE B48	20	56188	3644.8	2x2	LTE B48	20	55340	3560	2x2	LTE B48	20	55538	3579.8	2x2	-	-	-	-	-	24.41	24.54
CA_[48C]-[48C]-66A	LTE B66	10	132322	1745	QPSK	1	0	66786	2145	2x2	LTE B48	20	55990	3625	4x4	LTE B48	20	56188	3644.8	4x4	LTE B48	20	55340	3560	4x4	LTE B48	20	55538	3579.8	4x4	-	-	-	-	-	24.48	24.54
CA_[48C]-48C-[66A]	LTE B66	10	132322	1745	QPSK	1	0	66786	2145	4x4	LTE B48	20	55990	3625	4x4	LTE B48	20	56188	3644.8	4x4	LTE B48	20	55340	3560	2x2	LTE B48	20	55538	3579.8	2x2	-	-	-	-	-	24.40	24.54
CA_[48C]-[48C]-[66A]	LTE B66	10	132322	1745	QPSK	1	0	66786	2145	4x4	LTE B48	20	55990	3625	4x4	LTE B48	20	56188	3644.8	4x4	LTE B48	20	55340	3560	4x4	LTE B48	20	55538	3579.8	4x4	-	-	-	-	-	24.42	24.54
CA_[48E]-[66A]	LTE B66	10	132322	1745	QPSK	1	0	66786	2145	4x4	LTE B48	20	55990	3625	4x4	LTE B48	20	56188	3644.8	4x4	LTE B48	20	56386	3664.6	4x4	LTE B48	20	56584	3684.4	4x4	-	-	-	-	-	24.40	24.54
CA_[5A]-46D-66A	LTE B66	10	132322	1745	QPSK	1	0	66786	2145	2x2	LTE B5	10	2525	881.5	4x4	LTE B46	20	50665	5537.5	2x2	LTE B46	20	50467	5517.7	2x2	LTE B46	20	50863	5557.3	2x2	-	-	-	-	-	24.45	24.54
CA_5A-46D-[66A]	LTE B66	10	132322	1745	QPSK	1	0	66786	2145	4x4	LTE B5	10	2525	881.5	2x2	LTE B46	20	50665	5537.5	2x2	LTE B46	20	50467	5517.7	2x2	LTE B46	20	50863	5557.3	2x2	-	-	-	-	-	24.41	24.54
CA_[5A]-46D-[66A]	LTE B66	10	132322	1745	QPSK	1	0	66786	2145	4x4	LTE B5	10	2525	881.5	4x4	LTE B46	20	50665	5537.5	2x2	LTE B46	20	50467	5517.7	2x2	LTE B46	20	50863	5557.3	2x2	-	-	-	-	-	24.40	24.54
CA_5A-[48C]-66A-66A	LTE B66	10	132322	1745	QPSK	1	0	66786	2145	2x2	LTE B66	20	67236	2190	2x2	LTE B5	10	2525	881.5	2x2	LTE B48	20	55990	3625	4x4	LTE B48	20	56188	3644.8	4x4	-	-	-	-	-	24.48	24.54
CA_5A-48C-[66A]-66A	LTE B66	10	132322	1745	QPSK	1	0	66786	2145	4x4	LTE B66	20	67236	2190	2x2	LTE B5	10	2525	881.5	2x2	LTE B48	20	55990	3625	2x2	LTE B48	20	56188	3644.8	2x2	-	-	-	-	-	24.42	24.54
CA_5A-48C-66A-[66A]	LTE B66	10	132322	1745	QPSK	1	0	66786	2145	2x2	LTE B66	20	67236	2190	4x4	LTE B5	10	2525	881.5	2x2	LTE B48	20	55990	3625	2x2	LTE B48	20	56188	3644.8	2x2	-	-	-	-	-	24.44	24.54
CA_5A-[48C]-[66A]-66A	LTE B66	10	132322	1745	QPSK	1	0	66786	2145	4x4	LTE B66	20	67236	2190	2x2	LTE B5	10	2525	881.5	2x2	LTE B48	20	55990	3625	4x4	LTE B48	20	56188	3644.8	4x4	-	-	-	-	-	24.43	24.54
CA_5A-[48C]-66A-[66A]	LTE B66	10	132322	1745	QPSK	1	0	66786	2145	2x2	LTE B66	20	67236	2190	4x4	LTE B5	10	2525	881.5	2x2	LTE B48	20	55990	3625	4x4	LTE B48	20	56188	3644.8	4x4	-	-	-	-	-	24.50	24.54
CA_[5A]-48C-66A-66A	LTE B66	10	132322	1745	QPSK	1	0	66786	2145	2x2	LTE B66	20	67236	2190	2x2	LTE B5	10	2525	881.5	4x4	LTE B48	20	55990	3625	2x2	LTE B48	20	56188	3644.8	2x2	-	-	-	-	-	24.47	24.54
CA_[5A]-48C-[66A]-66A	LTE B66	10	132322	1745	QPSK	1	0	66786	2145	4x4	LTE B66	20	67236	2190	2x2	LTE B5	10	2525	881.5	4x4	LTE B48	20	55990	3625	2x2	LTE B48	20	56188	3644.8	2x2	-	-	-	-	-	24.48	24.54
CA_[5A]-48C-66A-[66A]	LTE B66	10	132322	1745	QPSK	1	0	66786	2145	2x2	LTE B66	20	67236	2190	4x4	LTE B5	10	2525	881.5	4x4	LTE B48	20	55990	3625	2x2	LTE B48	21	56194	3645.4	2x2	-	-	-	-	-	24.48	24.54
CA_5A-48C-[66A]-[66A]	LTE B66	10	132322	1745	QPSK	1	0	66786	2145	4x4	LTE B66	20	67236	2190	4x4	LTE B5	10	2525	881.5	2x2	LTE B48	20	55990	3625	2x2	LTE B48	20	56188	3644.8	2x2	-	-	-	-	-	24.41	24.54
CA_[5A]-48C-[66A]-[66A]	LTE B66	10	132322	1745	QPSK	1	0	66786	2145	4x4	LTE B66	20	67236	2190	4x4	LTE B5	10	2525	881.5	4x4	LTE B48	20	55990	3625	2x2	LTE B48	20	56188	3644.8	2x2	-	-	-	-	-	24.42	24.54
CA_[5A]-[48C]-66A-66A	LTE B66	10	132322	1745	QPSK	1	0	66786	2145	2x2	LTE B66	20	67236	2190	2x2	LTE B5	10	2525	881.5	4x4	LTE B48	20	55990	3625	4x4	LTE B48	20	56188	3644.8	4x4	-	-	-	-	-	24.49	24.54
CA_[5A]-[48D]-[66A]	LTE B66	10	132322	1745	QPSK	1	0	66786	2145	4x4	LTE B5	10	2525	881.5	4x4	LTE B48	20	55990	3625	4x4	LTE B48	20	56188	3644.8	4x4	LTE B48	20	56386	3664.6	4x4	-	-	-	-	-	24.41	24.54
CA_[5B]-30A-66A-66A	LTE B66	10	132322	1745	QPSK	1	0	66786	2145	2x2	LTE B66	20	67236	2190	2x2	LTE B5	10	2525	881.5	4x4	LTE B5	5	2453	874.3	4x4	LTE B30	10	9820	2355	2x2	-	-	-	-	-	24.11	24.54
CA_5B-30A-66A-[66A]	LTE B66	10	132322	1745	QPSK	1	0	66786	2145	2x2	LTE B66	20	67236	2190	4x4	LTE B5	10	2525	881.5	2x2	LTE B5	5	2453	874.3	2x2	LTE B30	10	9820	2355	2x2	-	-	-	-	-	24.45	24.54
CA_5B-30A-[66A]-66A	LTE B66	10	132322	1745	QPSK	1	0	66786	2145	4x4	LTE B66	20	67236	2190	2x2	LTE B5	10	2525	881.5	2x2	LTE B5	5	2453	874.3	2x2	LTE B30	10	9820	2355	2x2	-	-	-	-	-	24.39	24.54
CA_[5B]-30A-[66A]-66A	LTE B66	10	132322	1745	QPSK	1	0	66786	2145	4x4	LTE B66	20	67236	2190	2x2	LTE B5	10	2525	881.5	4x4	LTE B5	5	2453	874.3	4x4	LTE B30	10	9820	2355	2x2	-	-	-	-	-	24.43	24.54
CA_[5B]-30A-66A-[66A]	LTE B66	10	132322	1745	QPSK	1	0	66786	2145	2x2	LTE B66	20	67236	2190	4x4	LTE B5	10	2525	881.5	4x4	LTE B5	5	2453	874.3	4x4	LTE B30	10	9820	2355	2x2	-	-	-	-	-	24.41	24.54
CA_5B-30A-[66A]-[66A]	LTE B66	10	132322	1745	QPSK	1	0	66786	2145	4x4	LTE B66	20	67236	2190	4x4	LTE B5	10	2525	881.5	2x2	LTE B5	5	2453	874.3	2x2	LTE B30	10	9820	2355	2x2	-	-	-	-	-	24.41	24.54
CA_[5B]-30A-[66A]-[66A]	LTE B66	10	132322	1745	QPSK	1	0	66786	2145	4x4	LTE B66	20	67236	2190	4x4	LTE B5	10	2525	881.5	4x4	LTE B5	5	2453	874.3	4x4	LTE B30	10	9820	2355	2x2	-	-	-	-	-	24.40	24.54
CA_13A-48D-[66A]-66A	LTE B66	10	132322	1745	QPSK	1	0	66786	2145	4x4	LTE B66	20	67236	2190	2x2	LTE B13	10	5230	751	2x2	LTE B48	20	55990	3625	2x2	LTE B48	20	56188	3644.8	2x2	LTE B48	20	56386	3664.6	2x2	24.49	24.54
CA_13A-48D-66A-[66A]	LTE B66	10	132322	1745	QPSK	1	0	66786	2145	2x2	LTE B66	20	67236	2190	4x4	LTE B13	10	5230	751	2x2	LTE B48	20	55990	3625	2x2	LTE B48	20	56188	3644.8	2x2	LTE B48	20	56386	3664.6	2x2	24.51	24.54
CA_13A-48D-[66A]-[66A]	LTE B66	10	132322	1745	QPSK	1	0	66786	2145	4x4	LTE B66	20	67236	2190	4x4	LTE B13	10	5230	751	2x2	LTE B48	20	55990	3625	2x2	LTE B48	20	56188	3644.8	2x2	LTE B48	20	56386	3664.6	2x2	24.47	24.54
CA_13A-[48D]-66A-66A	LTE B66	10	132322	1745	QPSK	1	0	66786	2145	2x2	LTE B66	20	67236	2190	2x2	LTE B13	10	5230	751	2x2	LTE B48	20	55990	3625	4x4	LTE B48	20	56188	3644.8	4x4	LTE B48	20	56386	3664.6	4x4	24.47	24.54
CA_13A-[48D]-[66A]-66A	LTE B66	10	132322	1745	QPSK	1	0	66786	2145	4x4	LTE B66	20	67236	2190	2x2	LTE B13	10	5230	751	2x2	LTE B48	20	55990	3625	4x4	LTE B48	20	56188	3644.8	4x4	LTE B48	20	56386	3664.6	4x4	24.48	24.54
CA_13A-[48D]-66A-[66A]	LTE B66	10	132322	1745	QPSK	1	0	66786	2145	2x2	LTE B66	20	67236	2190	4x4	LTE B13	10	5230	751	2x2	LTE B48	20	55990	3625	4x4	LTE B48	20	56188	3644.8	4x4	LTE B48	20	56386	3664.6	4x4	24.45	24.54
CA_[2A]-13A-48D-66A	LTE B66	10	132322	1745	QPSK	1	0	66786	2145	2x2	LTE B2	20	900	1960	4x4	LTE B13	10	5230	751	2x2	LTE B48	20	55990	3625	2x2	LTE B48	20	56188	3644.8	2x2	LTE B48	20	56386	3664.6	2x2	24.40	24.54
CA_2A-13A-48D-[66A]	LTE B66	10	132322	1745	QPSK	1	0	66786	2145	4x4	LTE B2	20	900	1960	2x2	LTE B13	10	5230	751	2x2	LTE B48	20	55990	3625	2x2	LTE B48	20	56188	3644.8	2x2	LTE B48	20	56386	3664.6	2x2	24.45	24.54
CA_[2A]-13A-48D-[66A]	LTE B66	10	132322	1745	QPSK	1	0	66786	2145	4x4	LTE B2	20	900	1960	4x4	LTE B13	10	5230	751	2x2	LTE B48	20	55990	3625	2x2	LTE B48	20	56188	3644.8	2x2	LTE B48	20	56386	3664.6	2x2	24.43	24.54
CA_2A-13A-[48D]-66A	LTE B66	10	132322	1745	QPSK	1	0	66786	2145	2x2	LTE B2	20	900	1960	2x2	LTE B13	10	5230	751	2x2	LTE B48	20	55990	3625	4x4	LTE B48	20	56188	3644.8	4x4	LTE B48	20	56386	3664.6	4x4	24.51	24.54
CA_[2A]-13A-[48D]-66A	LTE B66	10	132322	1745	QPSK	1	0	66786	2145	2x2	LTE B2	20	900	1960	4x4	LTE B13	10	5230	751	2x2	LTE B48	20	55990	3625	4x4	LTE B48	20	56188	3644.8	4x4	LTE B48	20	56386	3664.6	4x4	24.41	24.54
CA_2A-13A-[48D]-[66A]	LTE B66	10	132322	1745	QPSK	1	0	66786	2145	4x4	LTE B2	20	900	1960	2x2	LTE B13	10	5230	751	2x2	LTE B48	20	55990	3625	4x4	LTE B48	20	56188	3644.8	4x4	LTE B48	20	56386	3664.6	4x4	24.44	24.54
CA_[2A]-46E-66A	LTE B66	10	132322	1745	QPSK	1	0	66786	2145	2x2	LTE B2	20	900	1960	4x4	LTE B46	20	50665	5537.5	2x2	LTE B46	20	50467	5517.7	2x2	LTE B46	20	50863	5557.3	2x2	LTE B46	20	50269	5497.9	2x2	24.45	24.54
CA_2A-46E-[66A]	LTE B66	10	132322	1745	QPSK	1	0	66786	2145	4x4	LTE B2	20	900	1960	2x2	LTE B46	20	50665	5537.5	2x2	LTE B46	20	50467	5517.7	2x2	LTE B46	20	50863	5557.3	2x2	LTE B46	20	50269	5497.9	2x2	24.39	24.54
CA_[2A]-46E-[66A]	LTE B66	10	132322	1745	QPSK	1	0	66786	2145	4x4	LTE B2	20	900	1960	4x4	LTE B46	20	50665	5537.5	2x2	LTE B46	20	50467	5517.7	2x2	LTE B46	20	50863	5557.3	2x2	LTE B46	20	50269	5497.9	2x2	24.41	24.54
CA_[2A]-48D-66A-66A	LTE B66	10	132322	1745	QPSK	1	0	66786	2145	2x2	LTE B66	20	67236	2190	2x2	LTE B2	20	900	1960	4x4	LTE B48	20	55990	3625	2x2	LTE B48	20	56188	3644.8	2x2	LTE B48	20	56386	3664.6	2x2	24.50	24.54
CA_2A-48D-[66A]-66A	LTE B66	10	132322	1745	QPSK	1	0	66786	2145	4x4	LTE B66	20	67236	2190	2x2	LTE B2	20	900	1960	2x2	LTE B48	20	55990	3625	2x2	LTE B48	20	56188	3644.8	2x2	LTE B48	20	56386	3664.6	2x2	24.44	24.54
CA_2A-48D-66A-[66A]	LTE B66	10	132322	1745	QPSK	1	0	66786	2145	2x2	LTE B66	20	67236	2190	4x4	LTE B2	20	900	1960	2x2	LTE B48	20	55990	3625	2x2	LTE B48	20	56188	3644.8	2x2	LTE B48	20	56386	3664.6	2x2	24.49	24.54
CA_[2A]-48D-[66A]-66A	LTE B66	10	132322	1745	QPSK	1	0	66786	2145	4x4	LTE B66	20	67236	2190	2x2	LTE B2	20	900	1960	4x4	LTE B48	20	55990	3625	2x2	LTE B48	20	56188	3644.8	2x2	LTE B48	20	56386	3664.6	2x2	24.46	24.54
CA_[2A]-48D-66A-[66A]	LTE B66	10	132322	1745	QPSK	1	0	66786	2145	2x2	LTE B66	20	67236	2190	4x4	LTE B2	20	900	1960	4x4	LTE B48	20	55990	3625	2x2	LTE B48	20	56188	3644.8	2x2	LTE B48	20	56386	3664.6	2x2	24.50	24.54
CA_2A-48D-[66A]-[66A]	LTE B66	10	132322	1745	QPSK	1	0	66786	2145	4x4	LTE B66	20	67236	2190	4x4	LTE B2	20	900	1960	2x2	LTE B48	20	55990	3625	2x2	LTE B48	20	56188	3644.8	2x2	LTE B48	20	56386	3664.6	2x2	24.45	24.54
CA_[2A]-48D-[66A]-[66A]	LTE B66	10	132322	1745	QPSK	1	0	66786	2145	4x4	LTE B66	20	67236	2190	4x4	LTE B2	20	900	1960	4x4	LTE B48	20	55990	3625	2x2	LTE B48	20	56188	3644.8	2x2	LTE B48	20	56386	3664.6	2x2	24.43	24.54
CA_2A-[48D]-66A-66A	LTE B66	10	132322	1745	QPSK	1	0	66786	2145	2x2	LTE B66	20	67236	2190	2x2	LTE B2	20	900	1960	2x2	LTE B48	20	55990	3625	4x4	LTE B48	20	56188	3644.8	4x4	LTE B48	20	56386	3664.6	4x4	24.46	24.54
CA_[2A]-[48D]-66A-66A	LTE B66	10	132322	1745	QPSK	1	0	66786	2145	2x2	LTE B66	20	67236	2190	2x2	LTE B2	20	900	1960	4x4	LTE B48	20	55990	3625	4x4	LTE B48	20	56188	3644.8	4x4	LTE B48	20	56386	3664.6	4x4	24.51	24.54
CA_2A-[48D]-[66A]-66A	LTE B66	10	132322	1745	QPSK	1	0	66786	2145	4x4	LTE B66	20	67236	2190	2x2	LTE B2	20	900	1960	2x2	LTE B48	20	55990	3625	4x4	LTE B48	20	56188	3644.8	4x4	LTE B48	20	56386	3664.6	4x4	24.42	24.54
CA_2A-[48D]-66A-[66A]	LTE B66	10	132322	1745	QPSK	1	0	66786	2145	2x2	LTE B66	20	67236	2190	4x4	LTE B2	20	900	1960	2x2	LTE B48	20	55990	3625	4x4	LTE B48	20	56188	3644.8	4x4	LTE B48	20	56386	3664.6	4x4	24.55	24.54
CA_2A-[48E]-66A	LTE B66	10	132322	1745	QPSK	1	0	66786	2145	2x2	LTE B2	20	900	1960	2x2	LTE B48	20	55990	3625	4x4	LTE B48	20	56188	3644.8	4x4	LTE B48	20	56386	3664.6	4x4	LTE B48	20	55792	3605.2	4x4	24.49	24.54
CA_[2A]-48E-66A	LTE B66	10	132322	1745	QPSK	1	0	66786	2145	2x2	LTE B2	20	900	1960	4x4	LTE B48	20	55990	3625	2x2	LTE B48	20	56188	3644.8	2x2	LTE B48	20	56386	3664.6	2x2	LTE B48	20	55792	3605.2	2x2	24.50	24.54
CA_2A-48E-[66A]	LTE B66	10	132322	1745	QPSK	1	0	66786	2145	4x4	LTE B2	20	900	1960	2x2	LTE B48	20	55990	3625	2x2	LTE B48	20	56188	3644.8	2x2	LTE B48	20	56386	3664.6	2x2	LTE B48	20	55792	3605.2	2x2	24.43	24.54
CA_[2A]-48E-[66A]	LTE B66	10	132322	1745	QPSK	1	0	66786	2145	4x4	LTE B2	20	900	1960	4x4	LTE B48	20	55990	3625	2x2	LTE B48	20	56188	3644.8	2x2	LTE B48	20	56386	3664.6	2x2	LTE B48	20	55792	3605.2	2x2	24.43	24.54
CA_[2A]-5A-48D-66A	LTE B66	10	132322	1745	QPSK	1	0	66786	2145	2x2	LTE B2	20	900	1960	4x4	LTE B5	10	2525	881.5	2x2	LTE B48	20	55990	3625	2x2	LTE B48	20	56188	3644.8	2x2	LTE B48	20	56386	3664.6	2x2	24.47	24.54
CA_2A-[5A]-48D-66A	LTE B66	10	132322	1745	QPSK	1	0	66786	2145	2x2	LTE B2	20	900	1960	2x2	LTE B5	10	2525	881.5	4x4	LTE B48	20	55990	3625	2x2	LTE B48	20	56188	3644.8	2x2	LTE B48	20	56386	3664.6	2x2	24.49	24.54
CA_2A-5A-48D-[66A]	LTE B66	10	132322	1745	QPSK	1	0	66786	2145	4x4	LTE B2	20	900	1960	2x2	LTE B5	10	2525	881.5	2x2	LTE B48	20	55990	3625	2x2	LTE B48	20	56188	3644.8	2x2	LTE B48	20	56386	3664.6	2x2	24.40	24.54
CA_[2A]-[5A]-48D-66A	LTE B66	10	132322	1745	QPSK	1	0	66786	2145	2x2	LTE B2	20	900	1960	4x4	LTE B5	10	2525	881.5	4x4	LTE B48	20	55990	3625	2x2	LTE B48	20	56188	3644.8	2x2	LTE B48	20	56386	3664.6	2x2	24.46	24.54
CA_[2A]-5A-48D-[66A]	LTE B66	10	132322	1745	QPSK	1	0	66786	2145	4x4	LTE B2	20	900	1960	4x4	LTE B5	10	2525	881.5	2x2	LTE B48	20	55990	3625	2x2	LTE B48	20	56188	3644.8	2x2	LTE B48	20	56386	3664.6	2x2	24.43	24.54
CA_2A-[5A]-48D-[66A]	LTE B66	10	132322	1745	QPSK	1	0	66786	2145	4x4	LTE B2	20	900	1960	2x2	LTE B5	10	2525	881.5	4x4	LTE B48	20	55990	3625	2x2	LTE B48	20	56188	3644.8	2x2	LTE B48	20	56386	3664.6	2x2	24.42	24.54
CA_[2A]-[5A]-48D-[66A]	LTE B66	10	132322	1745	QPSK	1	0	66786	2145	4x4	LTE B2	20	900	1960	4x4	LTE B5	10	2525	881.5	4x4	LTE B48	20	55990	3625	2x2	LTE B48	20	56188	3644.8	2x2	LTE B48	20	56386	3664.6	2x2	24.41	24.54
CA_2A-5A-[48D]-66A	LTE B66	10	132322	1745	QPSK	1	0	66786	2145	2x2	LTE B2	20	900	1960	2x2	LTE B5	10	2525	881.5	2x2	LTE B48	20	55990	3625	4x4	LTE B48	20	56188	3644.8	4x4	LTE B48	20	56386	3664.6	4x4	24.50	24.54
CA_[2A]-5A-[48D]-66A	LTE B66	10	132322	1745	QPSK	1	0	66786	2145	2x2	LTE B2	20	900	1960	4x4	LTE B5	10	2525	881.5	2x2	LTE B48	20	55990	3625	4x4	LTE B48	20	56188	3644.8	4x4	LTE B48	20	56386	3664.6	4x4	24.51	24.54
CA_2A-[5A]-[48D]-66A	LTE B66	10	132322	1745	QPSK	1	0	66786	2145	2x2	LTE B2	20	900	1960	2x2	LTE B5	10	2525	881.5	4x4	LTE B48	20	55990	3625	4x4	LTE B48	20	56188	3644.8	4x4	LTE B48	20	56386	3664.6	4x4	24.48	24.54
CA_2A-5A-[48D]-[66A]	LTE B66	10	132322	1745	QPSK	1	0	66786	2145	4x4	LTE B2	20	900	1960	2x2	LTE B5	10	2525	881.5	2x2	LTE B48	20	55990	3625	4x4	LTE B48	20	56188	3644.8	4x4	LTE B48	20	56386	3664.6	4x4	24.40	24.54
CA_[5A]-48D-66A-66A	LTE B66	10	132322	1745	QPSK	1	0	66786	2145	2x2	LTE B66	20	67236	2190	2x2	LTE B5	10	2525	881.5	4x4	LTE B48	20	55990	3625	2x2	LTE B48	20	56188	3644.8	2x2	LTE B48	20	56386	3664.6	2x2	24.45	24.54
CA_5A-48D-[66A]-66A	LTE B66	10	132322	1745	QPSK	1	0	66786	2145	4x4	LTE B66	20	67236	2190	2x2	LTE B5	10	2525	881.5	2x2	LTE B48	20	55990	3625	2x2	LTE B48	20	56188	3644.8	2x2	LTE B48	20	56386	3664.6	2x2	24.41	24.54
CA_5A-48D-66A-[66A]	LTE B66	10	132322	1745	QPSK	1	0	66786	2145	2x2	LTE B66	20	67236	2190	4x4	LTE B5	10	2525	881.5	2x2	LTE B48	20	55990	3625	2x2	LTE B48	20	56188	3644.8	2x2	LTE B48	20	56386	3664.6	2x2	24.50	24.54
CA_[5A]-48D-[66A]-66A	LTE B66	10	132322	1745	QPSK	1	0	66786	2145	4x4	LTE B66	20	67236	2190	2x2	LTE B5	10	2525	881.5	4x4	LTE B48	20	55990	3625	2x2	LTE B48	20	56188	3644.8	2x2	LTE B48	20	56386	3664.6	2x2	24.42	24.54
CA_[5A]-48D-66A-[66A]	LTE B66	10	132322	1745	QPSK	1	0	66786	2145	2x2	LTE B66	20	67236	2190	4x4	LTE B5	10	2525	881.5	4x4	LTE B48	20	55990	3625	2x2	LTE B48	20	56188	3644.8	2x2	LTE B48	20	56386	3664.6	2x2	24.48	24.54
CA_5A-48D-[66A]-[66A]	LTE B66	10	132322	1745	QPSK	1	0	66786	2145	4x4	LTE B66	20	67236	2190	4x4	LTE B5	10	2525	881.5	2x2	LTE B48	20	55990	3625	2x2	LTE B48	20	56188	3644.8	2x2	LTE B48	20	56386	3664.6	2x2	24.43	24.54
CA_[5A]-48D-[66A]-[66A]	LTE B66	10	132322	1745	QPSK	1	0	66786	2145	4x4	LTE B66	20	67236	2190	4x4	LTE B5	10	2525	881.5	4x4	LTE B48	20	55990	3625	2x2	LTE B48	20	56188	3644.8	2x2	LTE B48	20	56386	3664.6	2x2	24.40	24.54
CA_5A-[48D]-66A-66A	LTE B66	10	132322	1745	QPSK	1	0	66786	2145	2x2	LTE B66	20	67236	2190	2x2	LTE B5	10	2525	881.5	2x2	LTE B48	20	55990	3625	4x4	LTE B48	20	56188	3644.8	4x4	LTE B48	20	56386	3664.6	4x4	24.52	24.54
CA_[5A]-[48D]-66A-66A	LTE B66	10	132322	1745	QPSK	1	0	66786	2145	2x2	LTE B66	20	67236	2190	2x2	LTE B5	10	2525	881.5	4x4	LTE B48	20	55990	3625	4x4	LTE B48	20	56188	3644.8	4x4	LTE B48	20	56386	3664.6	4x4	24.53	24.54
CA_5A-[48D]-[66A]-66A	LTE B66	10	132322	1745	QPSK	1	0	66786	2145	4x4	LTE B66	20	67236	2190	2x2	LTE B5	10	2525	881.5	2x2	LTE B48	20	55990	3625	4x4	LTE B48	20	56188	3644.8	4x4	LTE B48	20	56386	3664.6	4x4	24.41	24.54
CA_5A-[48D]-66A-[66A]	LTE B66	10	132322	1745	QPSK	1	0	66786	2145	2x2	LTE B66	20	67236	2190	4x4	LTE B5	10	2525	881.5	2x2	LTE B48	20	55990	3625	4x4	LTE B48	20	56188	3644.8	4x4	LTE B48	20	56386	3664.6	4x4	24.55	24.54

H.3.7 LTE Band 30 as PCC

Table H-17
Maximum Output Powers

	PCC									SCC 1					SCC 2					SCC 3					SCC 4					Power	
Combination	PCC Band	PCC BW [MHz]	PCC (UL) Ch.	PCC (UL) Freq. [MHz]	Mod.	PCC UL# RB	PCC UL RB Offset	PCC (DL) Ch.	PCC (DL) Freq. [MHz]	DL Ant. Config.	SCC Band	SCC BW [MHz]	SCC (DL) Ch.	SCC (DL) Freq. [MHz]	DL Ant. Config.	SCC Band	SCC BW [MHz]	SCC (DL) Ch.	SCC (DL) Freq. [MHz]	DL Ant. Config.	SCC Band	SCC BW [MHz]	SCC (DL) Ch.	SCC (DL) Freq. [MHz]	DL Ant. Config.	SCC Band	SCC BW [MHz]	SCC (DL) Ch.	SCC (DL) Freq. [MHz]	DL Ant. Config.	LTE Tx.Power with DL CA Enabled	LTE Single Carrier Tx Power (dBm)
CA_[2A]-4A-30A	LTE B30	5	27710	2310	QPSK	1	12	9820	2355	2x2	LTE B2	20	900	1960	4x4	LTE B4	20	2175	2132.5	2x2	-	-	-	-	-	-	-	-	-	-	23.60	23.52
CA_2A-[4A]-30A	LTE B30	5	27710	2310	QPSK	1	12	9820	2355	2x2	LTE B2	20	900	1960	2x2	LTE B4	20	2175	2132.5	4x4	-	-	-	-	-	-	-	-	-	-	23.52	23.52
CA_[2A]-[4A]-30A	LTE B30	5	27710	2310	QPSK	1	12	9820	2355	2x2	LTE B2	20	900	1960	4x4	LTE B4	20	2175	2132.5	4x4	-	-	-	-	-	-	-	-	-	-	23.48	23.52
CA_[4A]-12A-30A	LTE B30	5	27710	2310	QPSK	1	12	9820	2355	2x2	LTE B4	20	2175	2132.5	4x4	LTE B12	10	5095	737.5	2x2	-	-	-	-	-	-	-	-	-	-	23.58	23.52
CA_[4A]-29A-30A	LTE B30	5	27710	2310	QPSK	1	12	9820	2355	2x2	LTE B4	20	2175	2132.5	4x4	LTE B29	10	9715	722.5	2x2	-	-	-	-	-	-	-	-	-	-	23.51	23.52
CA_[4A]-5A-30A	LTE B30	5	27710	2310	QPSK	1	12	9820	2355	2x2	LTE B4	20	2175	2132.5	4x4	LTE B5	10	2525	881.5	2x2	-	-	-	-	-	-	-	-	-	-	23.49	23.52
CA_4A-[5A]-30A	LTE B30	5	27710	2310	QPSK	1	12	9820	2355	2x2	LTE B4	20	2175	2132.5	2x2	LTE B5	10	2525	881.5	4x4	-	-	-	-	-	-	-	-	-	-	23.51	23.52
CA_[4A]-[5A]-30A	LTE B30	5	27710	2310	QPSK	1	12	9820	2355	2x2	LTE B4	20	2175	2132.5	4x4	LTE B5	10	2525	881.5	4x4	-	-	-	-	-	-	-	-	-	-	23.52	23.52
CA_29A-30A-[66A]-66A	LTE B30	5	27710	2310	QPSK	1	12	9820	2355	2x2	LTE B29	10	9715	722.5	2x2	LTE B66	20	66786	2145	4x4	LTE B66	20	67236	2190	2x2	-	-	-	-	-	23.55	23.52
CA_29A-30A-[66A]-[66A]	LTE B30	5	27710	2310	QPSK	1	12	9820	2355	2x2	LTE B29	10	9715	722.5	2x2	LTE B66	20	66786	2145	4x4	LTE B66	20	67236	2190	4x4	-	-	-	-	-	23.51	23.52
CA_[2A]-29A-30A-66A	LTE B30	5	27710	2310	QPSK	1	12	9820	2355	2x2	LTE B2	20	900	1960	4x4	LTE B29	10	9715	722.5	2x2	LTE B66	20	66786	2145	2x2	-	-	-	-	-	23.57	23.52
CA_2A-29A-30A-[66A]	LTE B30	5	27710	2310	QPSK	1	12	9820	2355	2x2	LTE B2	20	900	1960	2x2	LTE B29	10	9715	722.5	2x2	LTE B66	20	66786	2145	4x4	-	-	-	-	-	23.51	23.52
CA_[2A]-29A-30A-[66A]	LTE B30	5	27710	2310	QPSK	1	12	9820	2355	2x2	LTE B2	20	900	1960	4x4	LTE B29	10	9715	722.5	4x4	LTE B66	20	66786	2145	4x4	-	-	-	-	-	23.51	23.52
CA_[2A]-2A-29A-30A	LTE B30	5	27710	2310	QPSK	1	12	9820	2355	2x2	LTE B2	20	900	1960	4x4	LTE B2	20	700	1940	2x2	LTE B29	10	9715	722.5	2x2	-	-	-	-	-	23.61	23.52
CA_[2A]-[2A]-29A-30A	LTE B30	5	27710	2310	QPSK	1	12	9820	2355	2x2	LTE B2	20	900	1960	4x4	LTE B2	20	700	1940	4x4	LTE B29	10	9715	722.5	2x2	-	-	-	-	-	23.62	23.52
CA_[2A]-12A-30A-66A-66A	LTE B30	5	27710	2310	QPSK	1	12	9820	2355	2x2	LTE B2	20	900	1960	4x4	LTE B12	10	5095	737.5	2x2	LTE B66	20	66786	2145	2x2	LTE B66	20	67236	2190	2x2	23.48	23.52
CA_2A-12A-30A-[66A]-66A	LTE B30	5	27710	2310	QPSK	1	12	9820	2355	2x2	LTE B2	20	900	1960	2x2	LTE B12	10	5095	737.5	2x2	LTE B66	20	66786	2145	4x4	LTE B66	20	67236	2190	2x2	23.43	23.52
CA_[2A]-12A-30A-[66A]-66A	LTE B30	5	27710	2310	QPSK	1	12	9820	2355	2x2	LTE B2	20	900	1960	4x4	LTE B12	10	5095	737.5	2x2	LTE B66	20	66786	2145	4x4	LTE B66	20	67236	2190	2x2	23.47	23.52
CA_2A-12A-30A-[66A]-[66A]	LTE B30	5	27710	2310	QPSK	1	12	9820	2355	2x2	LTE B2	20	900	1960	2x2	LTE B12	10	5095	737.5	2x2	LTE B66	20	66786	2145	4x4	LTE B66	20	67236	2190	4x4	23.43	23.52
CA_[2A]-12A-30A-[66A]-[66A]	LTE B30	5	27710	2310	QPSK	1	12	9820	2355	2x2	LTE B2	20	900	1960	4x4	LTE B12	10	5095	737.5	2x2	LTE B66	20	66786	2145	4x4	LTE B66	20	67236	2190	4x4	23.44	23.52
CA_[2A]-2A-12A-30A-66A	LTE B30	5	27710	2310	QPSK	1	12	9820	2355	2x2	LTE B2	20	900	1960	4x4	LTE B2	20	700	1940	2x2	LTE B12	10	5095	737.5	2x2	LTE B66	20	66786	2145	2x2	23.48	23.52
CA_2A-2A-12A-30A-[66A]	LTE B30	5	27710	2310	QPSK	1	12	9820	2355	2x2	LTE B2	20	900	1960	2x2	LTE B2	20	700	1940	2x2	LTE B12	10	5095	737.5	2x2	LTE B66	20	66786	2145	4x4	23.49	23.52
CA_[2A]-[2A]-12A-30A-66A	LTE B30	5	27710	2310	QPSK	1	12	9820	2355	2x2	LTE B2	20	900	1960	4x4	LTE B2	20	700	1940	4x4	LTE B12	10	5095	737.5	2x2	LTE B66	20	66786	2145	2x2	23.51	23.52
CA_[2A]-2A-12A-30A-[66A]	LTE B30	5	27710	2310	QPSK	1	12	9820	2355	2x2	LTE B2	20	900	1960	4x4	LTE B2	20	700	1940	2x2	LTE B12	10	5095	737.5	2x2	LTE B66	20	66786	2145	4x4	23.48	23.52
CA_[2A]-[2A]-12A-30A-[66A]	LTE B30	5	27710	2310	QPSK	1	12	9820	2355	2x2	LTE B2	20	900	1960	4x4	LTE B2	20	700	1940	4x4	LTE B12	10	5095	737.5	2x2	LTE B66	20	66786	2145	4x4	23.52	23.52
CA_[2A]-2A-5A-30A-66A	LTE B30	5	27710	2310	QPSK	1	12	9820	2355	2x2	LTE B2	20	900	1960	4x4	LTE B2	20	700	1940	2x2	LTE B5	10	2525	881.5	2x2	LTE B66	20	66786	2145	2x2	23.52	23.52
CA_2A-2A-[5A]-30A-66A	LTE B30	5	27710	2310	QPSK	1	12	9820	2355	2x2	LTE B2	20	900	1960	2x2	LTE B2	20	700	1940	2x2	LTE B5	10	2525	881.5	4x4	LTE B66	20	66786	2145	4x4	23.54	23.52
CA_2A-2A-5A-30A-[66A]	LTE B30	5	27710	2310	QPSK	1	12	9820	2355	2x2	LTE B2	20	900	1960	2x2	LTE B2	20	700	1940	2x2	LTE B5	10	2525	881.5	2x2	LTE B66	20	66786	2145	4x4	23.50	23.52
CA_[2A]-[2A]-5A-30A-66A	LTE B30	5	27710	2310	QPSK	1	12	9820	2355	2x2	LTE B2	20	900	1960	4x4	LTE B2	20	700	1940	4x4	LTE B5	10	2525	881.5	2x2	LTE B66	20	66786	2145	2x2	23.49	23.52
CA_[2A]-2A-[5A]-30A-66A	LTE B30	5	27710	2310	QPSK	1	12	9820	2355	2x2	LTE B2	20	900	1960	4x4	LTE B2	20	700	1940	2x2	LTE B5	10	2525	881.5	4x4	LTE B66	20	66786	2145	2x2	23.52	23.52
CA_[2A]-2A-[5A]-30A-66A	LTE B30	5	27710	2310	QPSK	1	12	9820	2355	2x2	LTE B2	20	900	1960	4x4	LTE B2	20	700	1940	2x2	LTE B5	10	2525	881.5	4x4	LTE B66	20	66786	2145	2x2	23.50	23.52
CA_[2A]-2A-5A-30A-[66A]	LTE B30	5	27710	2310	QPSK	1	12	9820	2355	2x2	LTE B2	20	900	1960	4x4	LTE B2	20	700	1940	2x2	LTE B5	10	2525	881.5	2x2	LTE B66	20	66786	2145	4x4	23.51	23.52
CA_2A-2A-[5A]-30A-[66A]	LTE B30	5	27710	2310	QPSK	1	12	9820	2355	2x2	LTE B2	20	900	1960	2x2	LTE B2	20	700	1940	2x2	LTE B5	10	2525	881.5	4x4	LTE B66	20	66786	2145	4x4	23.49	23.52
CA_[2A]-[2A]-[5A]-30A-66A	LTE B30	5	27710	2310	QPSK	1	12	9820	2355	2x2	LTE B2	20	900	1960	4x4	LTE B2	20	700	1940	4x4	LTE B5	10	2525	881.5	2x2	LTE B66	20	66786	2145	2x2	23.45	23.52
CA_[2A]-[2A]-5A-30A-[66A]	LTE B30	5	27710	2310	QPSK	1	12	9820	2355	2x2	LTE B2	20	900	1960	4x4	LTE B2	20	700	1940	4x4	LTE B5	10	2525	881.5	4x4	LTE B66	20	66786	2145	4x4	23.50	23.52
CA_[2A]-2A-[5A]-30A-[66A]	LTE B30	5	27710	2310	QPSK	1	12	9820	2355	2x2	LTE B2	20	900	1960	4x4	LTE B2	20	700	1940	2x2	LTE B5	10	2525	881.5	4x4	LTE B66	20	66786	2145	2x2	23.48	23.52
CA_[2A]-[2A]-[5A]-30A-[66A]	LTE B30	5	27710	2310	QPSK	1	12	9820	2355	2x2	LTE B2	20	900	1960	4x4	LTE B2	20	700	1940	4x4	LTE B5	10	2525	881.5	4x4	LTE B66	20	66786	2145	4x4	23.47	23.52
CA_[2A]-5A-30A-66A-66A	LTE B30	5	27710	2310	QPSK	1	12	9820	2355	2x2	LTE B2	20	900	1960	4x4	LTE B5	10	2525	881.5	2x2	LTE B66	20	66786	2145	2x2	LTE B66	20	67236	2190	2x2	23.50	23.52
CA_2A-[5A]-30A-66A-66A	LTE B30	5	27710	2310	QPSK	1	12	9820	2355	2x2	LTE B2	20	900	1960	2x2	LTE B5	10	2525	881.5	4x4	LTE B66	20	66786	2145	2x2	LTE B66	20	67236	2190	2x2	23.48	23.52
CA_2A-5A-30A-[66A]-66A	LTE B30	5	27710	2310	QPSK	1	12	9820	2355	2x2	LTE B2	20	900	1960	2x2	LTE B5	10	2525	881.5	2x2	LTE B66	20	66786	2145	4x4	LTE B66	20	67236	2190	2x2	23.49	23.52
CA_2A-[5A]-30A-66A-[66A]	LTE B30	5	27710	2310	QPSK	1	12	9820	2355	2x2	LTE B2	20	900	1960	2x2	LTE B5	10	2525	881.5	4x4	LTE B66	20	66786	2145	2x2	LTE B66	20	67236	2190	4x4	23.48	23.52
CA_[2A]-[5A]-30A-66A-[66A]	LTE B30	5	27710	2310	QPSK	1	12	9820	2355	2x2	LTE B2	20	900	1960	4x4	LTE B5	10	2525	881.5	2x2	LTE B66	20	66786	2145	4x4	LTE B66	20	67236	2190	4x4	23.49	23.52
CA_[2A]-5A-30A-[66A]-66A	LTE B30	5	27710	2310	QPSK	1	12	9820	2355	2x2	LTE B2	20	900	1960	2x2	LTE B5	10	2525	881.5	4x4	LTE B66	20	66786	2145	4x4	LTE B66	20	67236	2190	4x4	23.46	23.52
CA_[2A]-5A-30A-66A-[66A]	LTE B30	5	27710	2310	QPSK	1	12	9820	2355	2x2	LTE B2	20	900	1960	2x2	LTE B5	10	2525	881.5	2x2	LTE B5	5	2453	874.3	2x2	LTE B66	20	66786	2145	2x2	23.52	23.52
CA_[2A]-[5A]-30A-66A-[66A]	LTE B30	5	27710	2310	QPSK	1	12	9820	2355	2x2	LTE B2	20	900	1960	2x2	LTE B5	10	2525	881.5	4x4	LTE B5	5	2453	874.3	4x4	LTE B66	20	66786	2145	2x2	23.50	23.52
CA_[2A]-[5A]-30A-66A-[66A]	LTE B30	5	27710	2310	QPSK	1	12	9820	2355	2x2	LTE B2	20	900	1960	2x2	LTE B5	10	2525	881.5	2x2	LTE B5	5	2453	874.3	2x2	LTE B66	20	66786	2145	4x4	23.48	23.52
CA_2A-[5A]-30A-66A-[66A]	LTE B30	5	27710	2310	QPSK	1	12	9820	2355	2x2	LTE B2	20	900	1960	4x4	LTE B5	10	2525	881.5	4x4	LTE B5	5	2453	874.3	4x4	LTE B66	20	66786	2145	4x4	23.50	23.52
CA_2A-[5A]-30A-66A-[66A]	LTE B30	5	27710	2310	QPSK	1	12	9820	2355	2x2	LTE B2	20	900	1960	2x2	LTE B5	10	2525	881.5	2x2	LTE B5	5	2453	874.3	2x2	LTE B66	20	66786	2145	4x4	23.49	23.52
CA_[2A]-[5A]-30A-66A-[66A]	LTE B30	5	27710	2310	QPSK	1	12	9820	2355	2x2	LTE B2	20	900	1960	4x4	LTE B5	10	2525	881.5	4x4	LTE B5	5	2453	874.3	4x4	LTE B66	20	66786	2145	4x4	23.48	23.52
CA_2A-[5A]-30A-66A-[66A]	LTE B30	5	27710	2310	QPSK	1	12	9820	2355	2x2	LTE B2	20	900	1960	2x2	LTE B5	10	2525	881.5	2x2	LTE B5	5	2453	874.3	2x2	LTE B66	20	66786	2145	4x4	23.50	23.52
CA_[2A]-[5A]-30A-66A-[66A]	LTE B30	5	27710	2310	QPSK	1	12	9820	2355	2x2	LTE B2	20	900	1960	2x2	LTE B5	10	2525	881.5	4x4	LTE B5	5	2453	874.3	4x4	LTE B66	20	66786	2145	4x4	23.49	23.52
CA_5B-30A-[66A]-66A	LTE B30	5	27710	2310	QPSK	1	12	9820	2355	2x2	LTE B5	10	2525	881.5	2x2	LTE B5	5	2453	874.3	2x2	LTE B66	20	66786	2145	4x4	LTE B66	20	67236	2190	2x2	23.52	23.52
CA_[5B]-30A-[66A]-66A	LTE B30	5	27710	2310	QPSK	1	12	9820	2355	2x2	LTE B5	10	2525	881.5	4x4	LTE B5	5	2453	874.3	4x4	LTE B66	20	66786	2145	4x4	LTE B66	20	67236	2190	2x2	23.45	23.52
CA_5B-30A-[66A]-[66A]	LTE B30	5	27710	2310	QPSK	1	12	9820	2355	2x2	LTE B5	10	2525	881.5	2x2	LTE B5	5	2453	874.3	2x2	LTE B66	20	66786	2145	4x4	LTE B66	20	67236	2190	4x4	23.49	23.52
CA_[5B]-30A-[66A]-[66A]	LTE B30	5	27710	2310	QPSK	1	12	9820	2355	2x2	LTE B5	10	2525	881.5	4x4	LTE B5	5	2453	874.3	4x4	LTE B66	20	66786	2145	4x4	LTE B66	20	67236	2190	4x4	23.49	23.52

H.3.8 LTE Band 41 as PCC

Table H-18
Maximum Output Powers

	PCC										SCC 1					SCC 2					SCC 3					SCC 4					Power	
Combination	PCC Band	PCC BW [MHz]	PCC (UL) Ch.	PCC (UL) Freq. [MHz]	Mod.	PCC UL# RB	PCC UL RB Offset	PCC (DL) Ch.	PCC (DL) Freq. [MHz]	DL Ant. Config.	SCC Band	SCC BW [MHz]	SCC (DL) Ch.	SCC (DL) Freq. [MHz]	DL Ant. Config.	SCC Band	SCC BW [MHz]	SCC (DL) Ch.	SCC (DL) Freq. [MHz]	DL Ant. Config.	SCC Band	SCC BW [MHz]	SCC (DL) Ch.	SCC (DL) Freq. [MHz]	DL Ant. Config.	SCC Band	SCC BW [MHz]	SCC (DL) Ch.	SCC (DL) Freq. [MHz]	DL Ant. Config.	LTE Tx.Power with DL CA Enabled	LTE Single Carrier Tx Power (dBm)
CA_[41A]-46A	LTE B41	5	41490	2680	QPSK	1	12	41490	2680	4x4	LTE B46	20	50665	5537.5	2x2	-	-	-	-	-	-	-	-	-	-	-	-	-	-	-	24.17	24.16
CA_[41C] (1)	LTE B41	5	41490	2680	QPSK	1	12	41490	2680	4x4	LTE B41	20	41373	2668.3	4x4	-	-	-	-	-	-	-	-	-	-	-	-	-	-	-	24.14	24.16
CA_[41A]-46C	LTE B41	5	41490	2680	QPSK	1	12	41490	2680	4x4	LTE B46	20	50665	5537.5	2x2	LTE B46	20	50467	5517.7	2x2	-	-	-	-	-	-	-	-	-	-	24.18	24.16
CA_[41D]	LTE B41	10	41490	2680	QPSK	1	25	41490	2680	4x4	LTE B41	20	41346	2665.6	4x4	LTE B41	20	41148	2645.8	4x4	-	-	-	-	-	-	-	-	-	-	24.11	24.10
CA_[41A]-46D	LTE B41	5	41490	2680	QPSK	1	12	41490	2680	4x4	LTE B46	20	50665	5537.5	2x2	LTE B46	20	50467	5517.7	2x2	LTE B46	20	50863	5557.3	2x2	-	-	-	-	-	24.12	24.16
CA_[41A]-46E	LTE B41	5	41490	2680	QPSK	1	12	41490	2680	4x4	LTE B46	20	50665	5537.5	2x2	LTE B46	20	50467	5517.7	2x2	LTE B46	20	50863	5557.3	2x2	LTE B46	20	51061	5577.1	2x2	24.11	24.16

H.3.9 LTE Band 48 as PCC

Table H-19
Maximum Output Powers

	PCC										SCC 1					SCC 2					SCC 3					Power	
Combination	PCC Band	PCC BW [MHz]	PCC (UL) Ch.	PCC (UL) Freq. [MHz]	Mod.	PCC UL# RB	PCC UL RB Offset	PCC (DL) Ch.	PCC (DL) Freq. [MHz]	DL Ant. Config.	SCC Band	SCC BW [MHz]	SCC (DL) Ch.	SCC (DL) Freq. [MHz]	DL Ant. Config.	SCC Band	SCC BW [MHz]	SCC (DL) Ch.	SCC (DL) Freq. [MHz]	DL Ant. Config.	SCC Band	SCC BW [MHz]	SCC (DL) Ch.	SCC (DL) Freq. [MHz]	DL Ant. Config.	LTE Tx.Power with DL CA Enabled	LTE Single Carrier Tx Power (dBm)
CA_48A-[48A]	LTE B48	5	56715	3697.5	QPSK	1	12	56715	3697.5	2x2	LTE B48	20	55340	3560	4x4	-	-	-	-	-	-	-	-	-	-	24.75	24.75
CA_[48A]-48A	LTE B48	5	56715	3697.5	QPSK	1	12	56715	3697.5	4x4	LTE B48	20	55340	3560	2x2	-	-	-	-	-	-	-	-	-	-	24.79	24.75
CA_[48A]-[48A]	LTE B48	5	56715	3697.5	QPSK	1	12	56715	3697.5	4x4	LTE B48	20	55340	3560	4x4	-	-	-	-	-	-	-	-	-	-	24.73	24.75
CA_[48A]-48C	LTE B48	5	56715	3697.5	QPSK	1	12	56715	3697.5	4x4	LTE B48	20	55340	3560	2x2	LTE B48	20	55538	3579.8	2x2	-	-	-	-	-	24.76	24.75
CA_48C-[48A]	LTE B48	5	56715	3697.5	QPSK	1	12	56715	3697.5	2x2	LTE B48	20	56598	3685.8	2x2	LTE B48	20	55340	3560	4x4	-	-	-	-	-	24.74	24.75
CA_48A-[48C]	LTE B48	5	56715	3697.5	QPSK	1	12	56715	3697.5	2x2	LTE B48	20	55340	3560	4x4	LTE B48	20	55538	3579.8	4x4	-	-	-	-	-	24.70	24.75
CA_[48C]-48A	LTE B48	5	56715	3697.5	QPSK	1	12	56715	3697.5	4x4	LTE B48	20	56598	3685.8	4x4	LTE B48	20	55340	3560	2x2	-	-	-	-	-	24.73	24.75
CA_[48A]-[48C]	LTE B48	5	56715	3697.5	QPSK	1	12	56715	3697.5	4x4	LTE B48	20	55340	3560	4x4	LTE B48	20	55538	3579.8	4x4	-	-	-	-	-	24.74	24.75
CA_[48C]-[48A]	LTE B48	5	56715	3697.5	QPSK	1	12	56715	3697.5	4x4	LTE B48	20	56598	3685.8	4x4	LTE B48	20	55340	3560	4x4	-	-	-	-	-	24.72	24.75
CA_[48A]-48D	LTE B48	5	56715	3697.5	QPSK	1	12	56715	3697.5	4x4	LTE B48	20	55340	3560	2x2	LTE B48	20	55538	3579.8	2x2	LTE B48	20	55736	3599.6	2x2	24.72	24.75
CA_48A-[48D]	LTE B48	5	56715	3697.5	QPSK	1	12	56715	3697.5	2x2	LTE B48	20	55340	3560	4x4	LTE B48	20	55538	3579.8	4x4	LTE B48	20	55736	3599.6	4x4	24.74	24.75
CA_[48A]-[48D]	LTE B48	5	56715	3697.5	QPSK	1	12	56715	3697.5	4x4	LTE B48	20	55340	3560	4x4	LTE B48	20	55538	3579.8	4x4	LTE B48	20	55736	3599.6	4x4	24.73	24.75
CA_48C-[48C]	LTE B48	5	56715	3697.5	QPSK	1	12	56715	3697.5	2x2	LTE B48	20	56598	3685.8	2x2	LTE B48	20	55340	3560	4x4	LTE B48	20	55538	3579.8	4x4	24.69	24.75
CA_[48C]-48C	LTE B48	5	56715	3697.5	QPSK	1	12	56715	3697.5	4x4	LTE B48	20	56598	3685.8	4x4	LTE B48	20	55340	3560	2x2	LTE B48	20	55538	3579.8	2x2	24.70	24.75
CA_[48C]-[48C]	LTE B48	5	56715	3697.5	QPSK	1	12	56715	3697.5	4x4	LTE B48	20	56598	3685.8	4x4	LTE B48	20	55340	3560	4x4	LTE B48	20	55538	3579.8	4x4	24.68	24.75