REVISIONS

REV	ECN	DATE	CHECKED
A	8505	12/07/16	

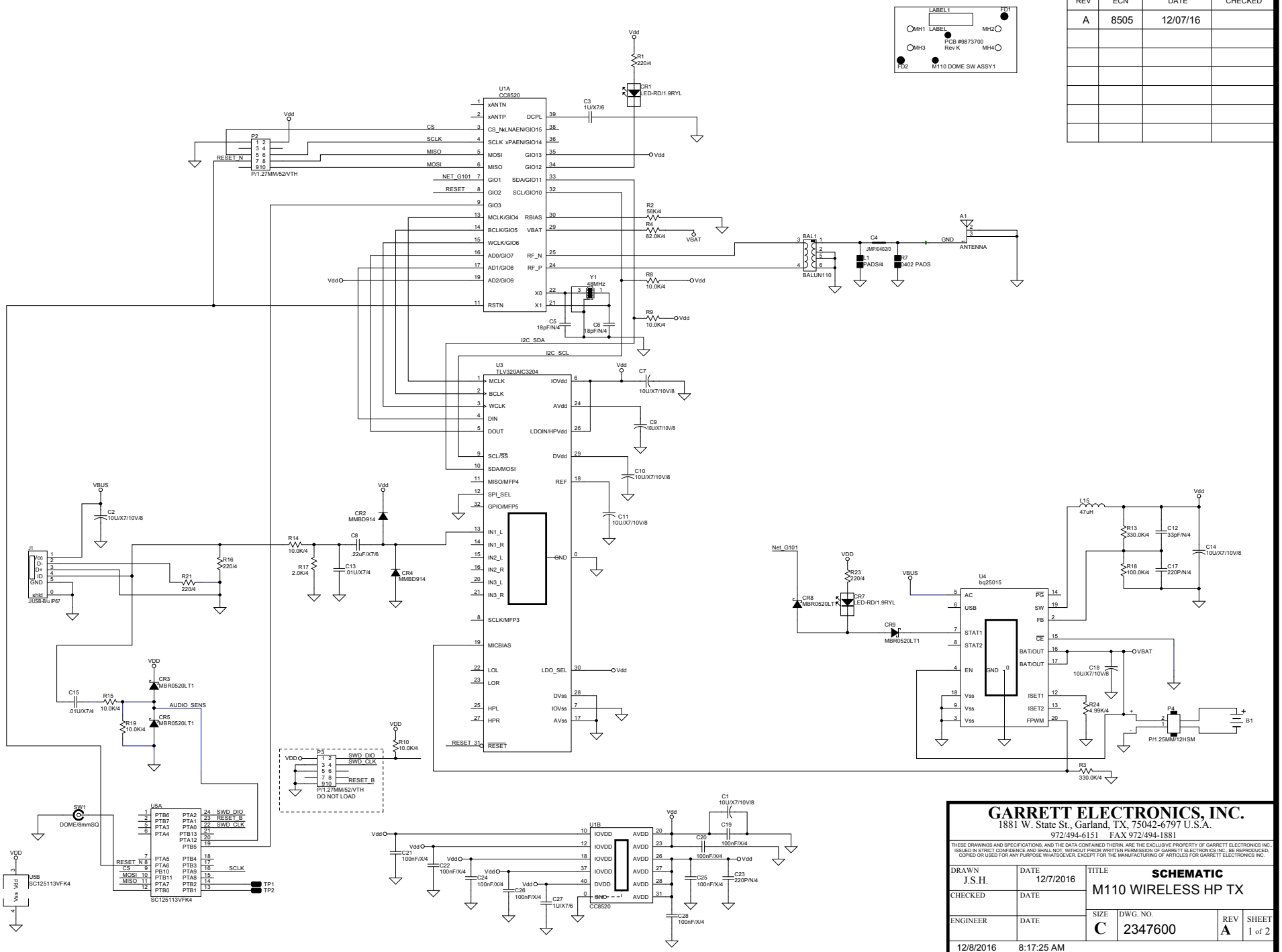

GARRETT ELECTRONICS, INC.

1881 W. State St., Garland, TX, 75042-6797 U.S.A.
972/494-6151 FAX 972/494-1881

THESE DRAWINGS AND SPECIFICATIONS, AND THE DATA CONTAINED THERIN, ARE THE EXCLUSIVE PROPERTY OF GARRETT ELECTRONICS INC. ISSUED IN STRICT CONFIDENCE AND SHALL NOT, WITHOUT PRIOR WRITTEN PERMISSION OF GARRETT ELECTRONICS INC., BE REPRODUCED, COPIED OR USED FOR ANY PURPOSE WHATSOEVER, EXCEPT FOR THE MANUFACTURING OF ARTICLES FOR GARRETT ELECTRONICS INC.

DRAWN J.S.H.	DATE 12/7/2016	TITLE **SCHEMATIC** M110 WIRELESS HP TX	
CHECKED	DATE		
ENGINEER	DATE	SIZE **C** / DWG. NO. 2347600	REV **A** / SHEET 1 of 2

12/8/2016 8:17:25 AM
O:\Circuits\Schematics\M110\M110_TX_2347600rA.SchDoc