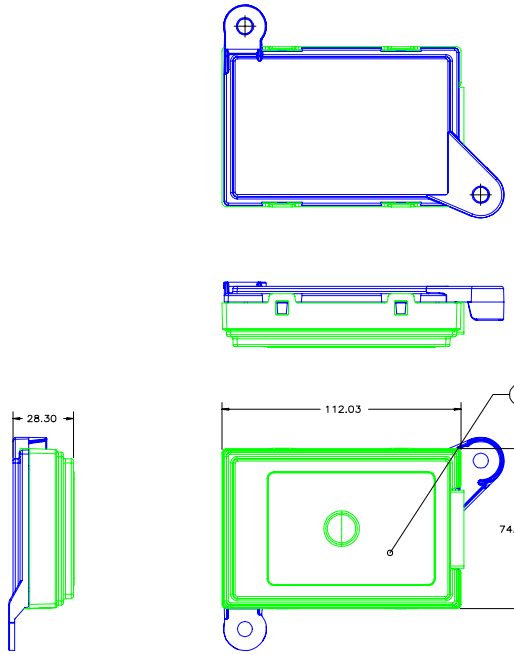

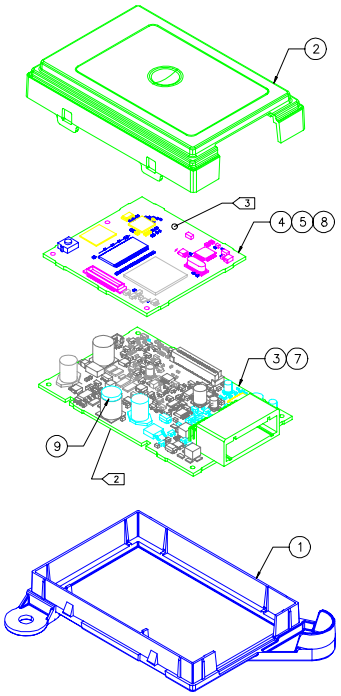

1	1	1	1	1	1	9	C	VB8452	BUMPER, COVER JAG X-300	N/A
–	1	–	1	–	–	8	B	VV3477	PCB ASM, 05 BC MAIN 16R/16F	0.7.00
–	–	1	1	–	–	7	A	VV3474	PCB ASM, 05 BC APPS MDX	N/A
–	–	–	–	1	1	6	B	VR1877	LABEL, 2.0 x 3.0	N/A
1	–	1	–	1	–	5	B	VV3476	PCB ASM, 05 BC MAIN 16R/32F	0.7.00
–	–	–	–	–	1	4	B	VV3475	PCB ASM, 05 BC MAIN 32R/32F	0.7.00
1	1	–	–	1	1	3	A	VV3473	PCB ASM, 05 BC APPS RL/TL	N/A
–	–	–	–	1	1	2	3	1145330	HFT, SJA UPR	N/A
–	–	–	–	1	1	1	6	1116122	HFT, SJA LWR	N/A
QTY	QTY	QTY	QTY	QTY	QTY	ITEM	REV	PART #	PART DESCRIPTION	SW VER

* = FOR REFERENCE ONLY

2D

ASM DESCRIPTION	DEST.	JCI ASM #	REV.
HFT ASM, SCP CAN	KC	1135132	2
HFT ASM, SCP U.S.	KA	1135133	2
HFT ASM, S3V CAN	KC	1135131	2
HFT ASM, S3V U.S.	KA	1135130	2
HFT ASM, SJA CAN	KC	1135135	2
HFT ASM, SJA U.S.	KA	1135134	2

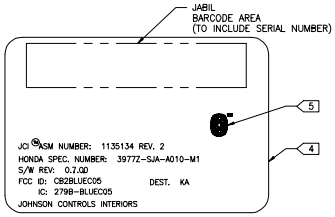

2B

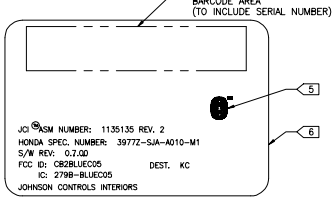

2E

NOTES:

1. FOAM BUMPER SHOULD BE CENTERED ON TOP OF VV3473 & VV3474 COMPONENT C4. MAXIMUM ALLOWABLE 25% OFF OF C4 FOR FOAM BUMBER.
2. AT FLAGGED LOCATION, PLACE FINAL ASSEMBLY BARCODE LABEL ON PCB IN AREA INDICATED (BOTTOM OF APPS BOARD).
3. AT FLAGGED LOCATION, PLACE BLUETOOTH BARCODE LABEL ON PCB IN AREA INDICATED.
4. (2C) ASSEMBLER IS TO PRINT LABEL INFORMATION AS SHOWN FOR HFT ASM SJA US USING ADHESIVE LABEL VR1877.
5. THERE MUST BE A BLANK AREA SURROUNDING EACH SIDE OF THE BLUETOOTH LOGO THAT IS EQUAL TO ONE HALF [0.5] OF THE HEIGHT OF THE BLUETOOTH LOGO.
6. (2F) ASSEMBLER IS TO PRINT LABEL INFORMATION AS SHOWN FOR HFT ASM SJA CAN USING ADHESIVE LABEL VR1877.

▽	DESIGNATES CRITICAL CHARACTERISTIC TO BE MONITORED PER CONTROL PLAN.
▽A	DESIGNATES CRITICAL CHARACTERISTIC TO BE MONITORED PER CONTROL PLAN USING ATTRIBUTE GAGING METHODS.
▽V	DESIGNATES CRITICAL CHARACTERISTIC TO BE MONITORED PER CONTROL PLAN USING VARIABLE MEASUREMENT OR GAGING METHOD.
⬡	DESIGNATES SIGNIFICANT CHARACTERISTIC TO BE MONITORED PER CONTROL PLAN.
⬡A	DESIGNATES SIGNIFICANT CHARACTERISTIC TO BE MONITORED PER CONTROL PLAN USING ATTRIBUTE GAGING METHODS.
⬡V	DESIGNATES SIGNIFICANT CHARACTERISTIC TO BE MONITORED PER CONTROL PLAN USING VARIABLE MEASUREMENT OR GAGING METHOD.
□	DESIGNATES CHARACTERISTIC TO BE CHECKED AT INITIAL / SUBSEQUENT CUSTOMER PART SUBMISSION(ONE TIME CAPABILITY)

GENERAL STANDARD UNLESS OTHERWISE SPECIFIED

THIRD ANGLE PROJECTION — ASME Y14.5M 1994

1. DIMENSIONS ARE IN MILLIMETERS.
2. ELECTRONIC FORMAT IS DATA MASTER.
   WALL GRAPHIC MEASURED DATA IS TO BE TAKEN FROM THE NOMINAL MODEL FILE AT ITS LATEST REVISION LEVEL.
   †UNDIMENSIONED FEATURES ARE TO MATCH THE CAD MODEL.
   WITHIN: ±X.XX ANGULAR ±2°
   ☒ THE SPI COMMERCIAL MOLDING TOLERANCES (1993 STANDARD) AS MEASURED FROM DATUMS

DWG NO. 1135129

CPP CODE
N/A

REVISION BLOCK

REV	SH/ ZONE	DESCRIPTION	ECO #	BY	DATE	CHK.
1		RELEASE FOR PRODUCTION	1177776	WH	16MAR04	SV
2A	B2	REMOVED CC FROM SPEC HES C206	1211965	TMS	14MAY04	JM
2B	B5	UPDATED KA LABEL VIEW				
2C	B3	NOTE 4 VR1877 WAS VJ6846				
2D	B7	REVISED BOM CHART				
2E	A5	ADDED KC LABEL VIEW				
2F	B3	ADDED NOTE 6				
2G	A1	ADDED JCI SPEC				

JOHNSON CONTROLS
AUTOMOTIVE SYSTEMS GROUP, INTERIORS

SPECIFICATIONS

PERFORMANCE: ▽ FMVSS 302
▽ CMVSS 302
HES C206
HONDA SPEC: 3977Z-SEP-A010-M1
HONDA SPEC: 3977Z-S3V-A010-M1
HONDA SPEC: 3977Z-SJA-A010-M1
JCI SPEC: TD-ELE-098-G

MATERIAL:
FINISH:

NAME: HFT ASM, SJAA

PROJECT/CUSTOMER: SJA/HONDA

PART NO. CHARTED	REV – –	DESIGN ENG TODD SCHMITZ	DATE 08DEC03
		PROJ. ENG JASON MOSER	DATE 08DEC03
PART NO. (J4) N/A	REV – –	CHECKED JASON MOSER	DATE 08DEC03
		SCALE 1:1	SHEET 1 OF 1
SIZE D	TOOL REF NO. / DATA FORMAT CATIA	DWG NO. 1135129	REV 2

17642.1135129.2.A.HFT ASM, SJAA