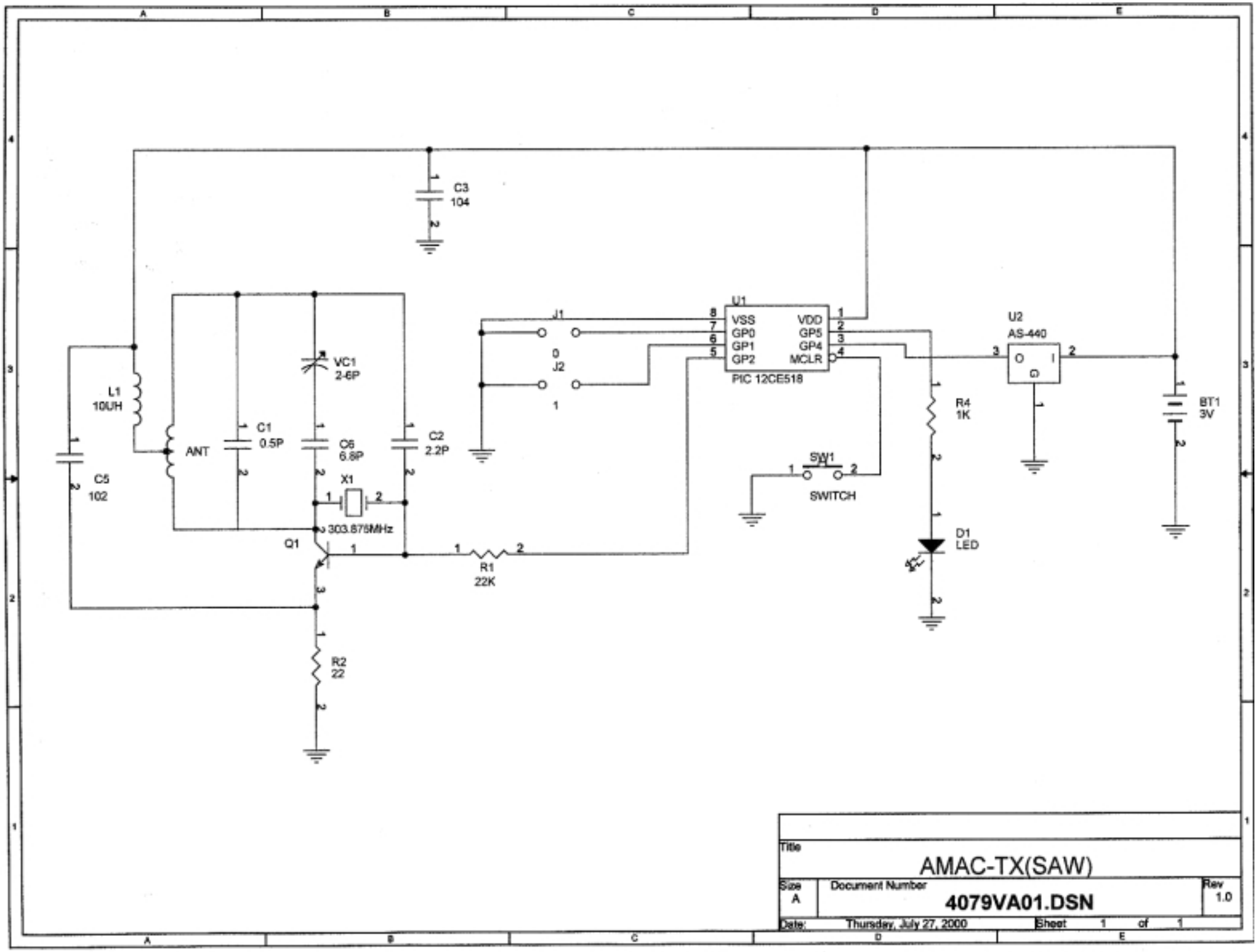
C3
104
U1
VSS
GP0
GP1
GP2
VDD
GP5
GP4
MCLR
PIC 12CE518
J1
J2
U2
AS-440
L1
10UH
ANT
C1
0.5P
VC1
2-6P
C6
6.8P
C2
2.2P
X1
303.875MHz
C5
102
Q1
R1
22K
R2
22
R4
1K
SW1
SWITCH
D1
LED
BT1
3V
Title
AMAC-TX(SAW)
Size
A
Document Number
4079VA01.DSN
Rev
1.0
Date:
Thursday, July 27, 2000
Sheet
1
of
1