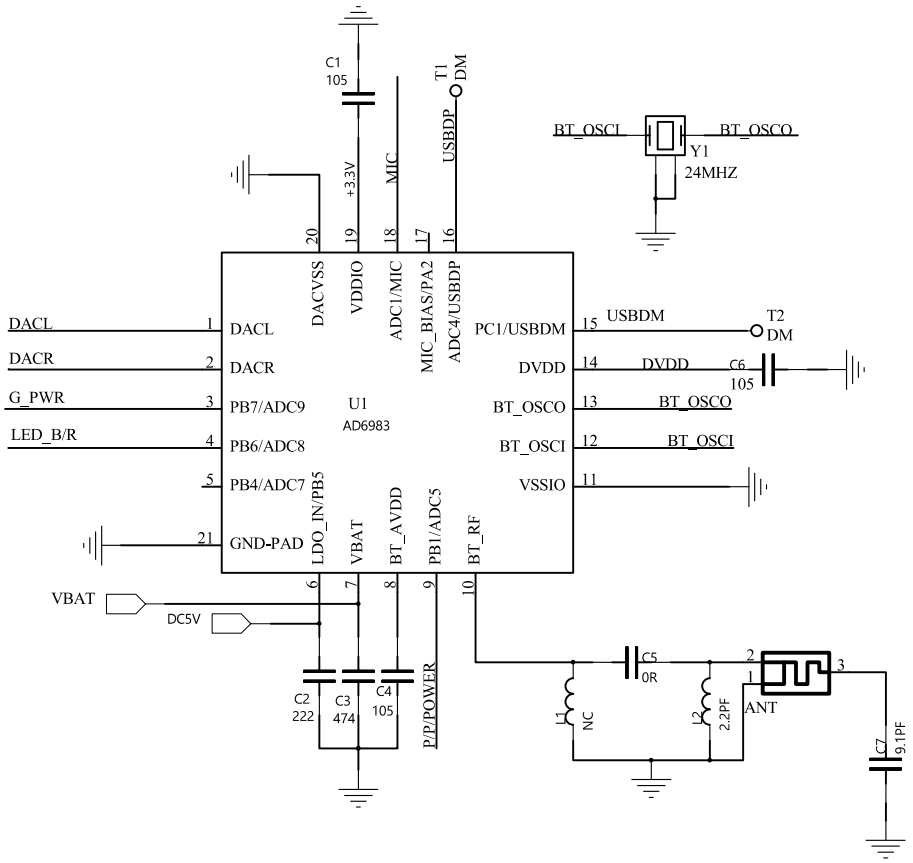

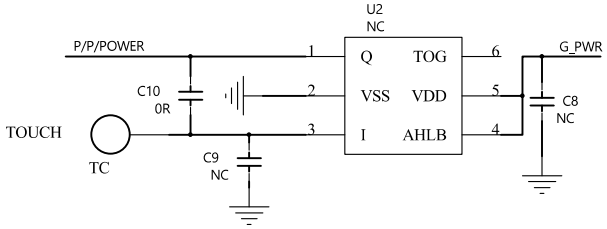

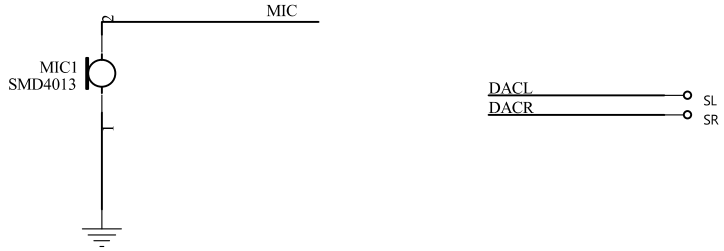

Earphone

Mic

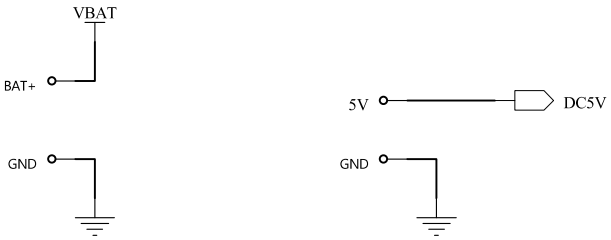

POWER

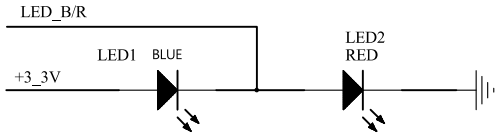

LED