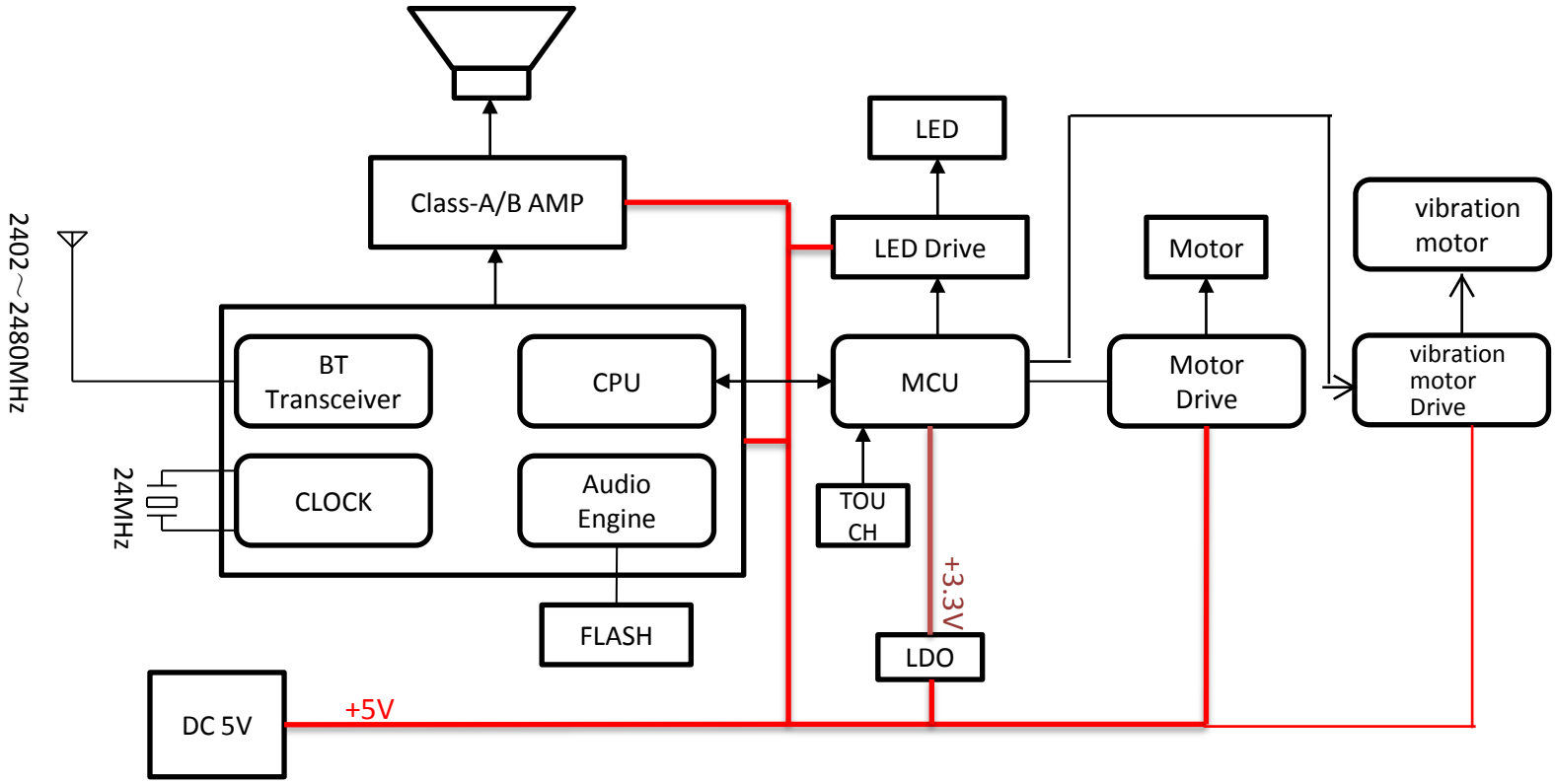

Swing 1.5 MCK Block Diagram