UISP Wave Nano

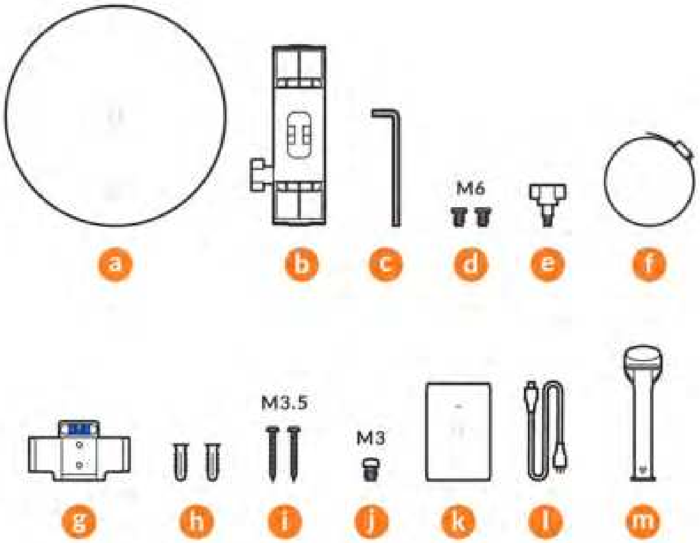
M6
a
b
c
d
e
f
M3.5
M3
g
h
i
j
k
l
m

1

a

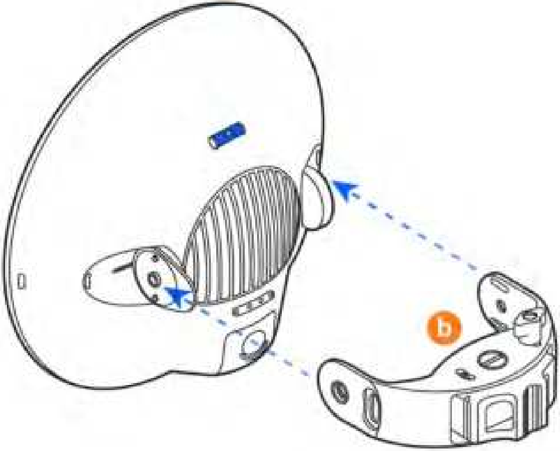

2

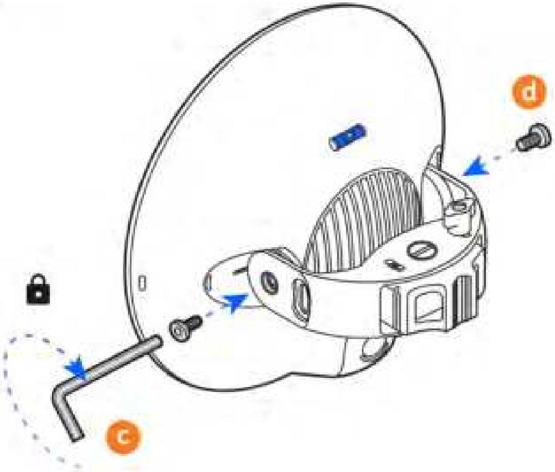

3

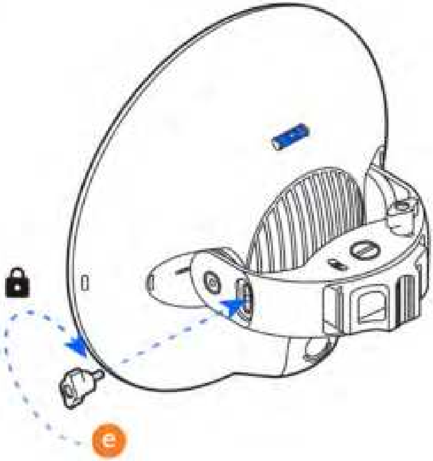

4

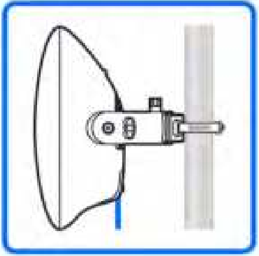

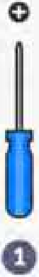

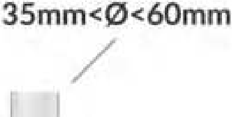

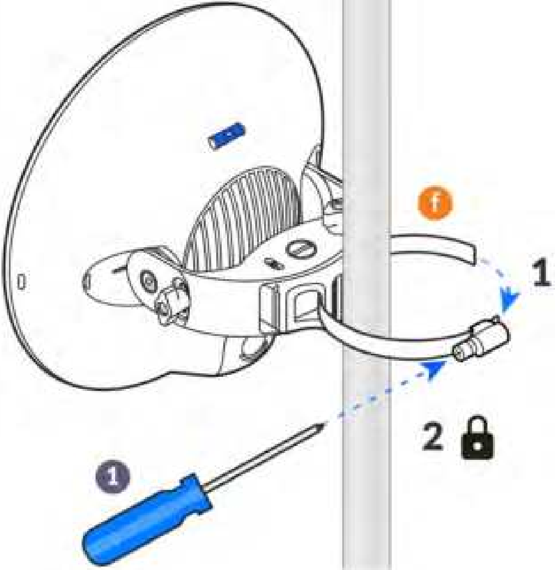

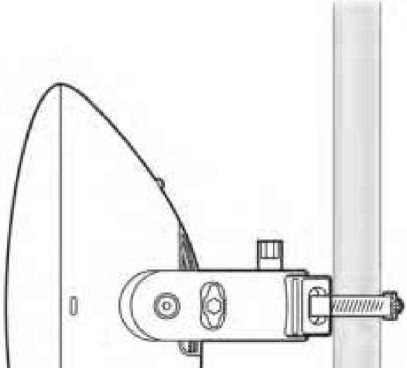

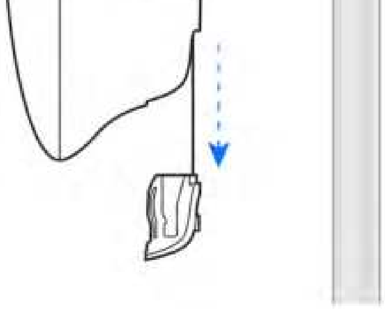

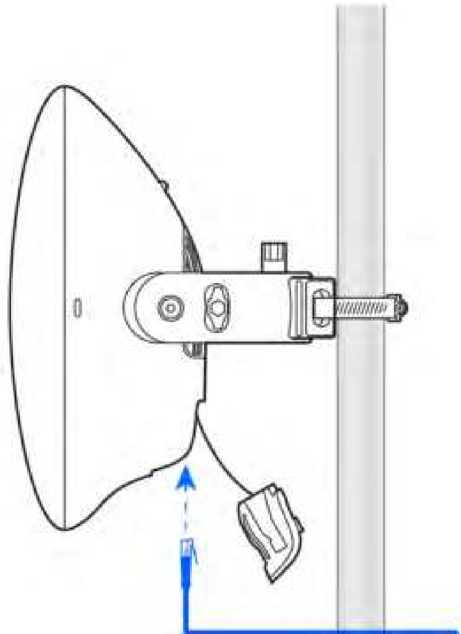

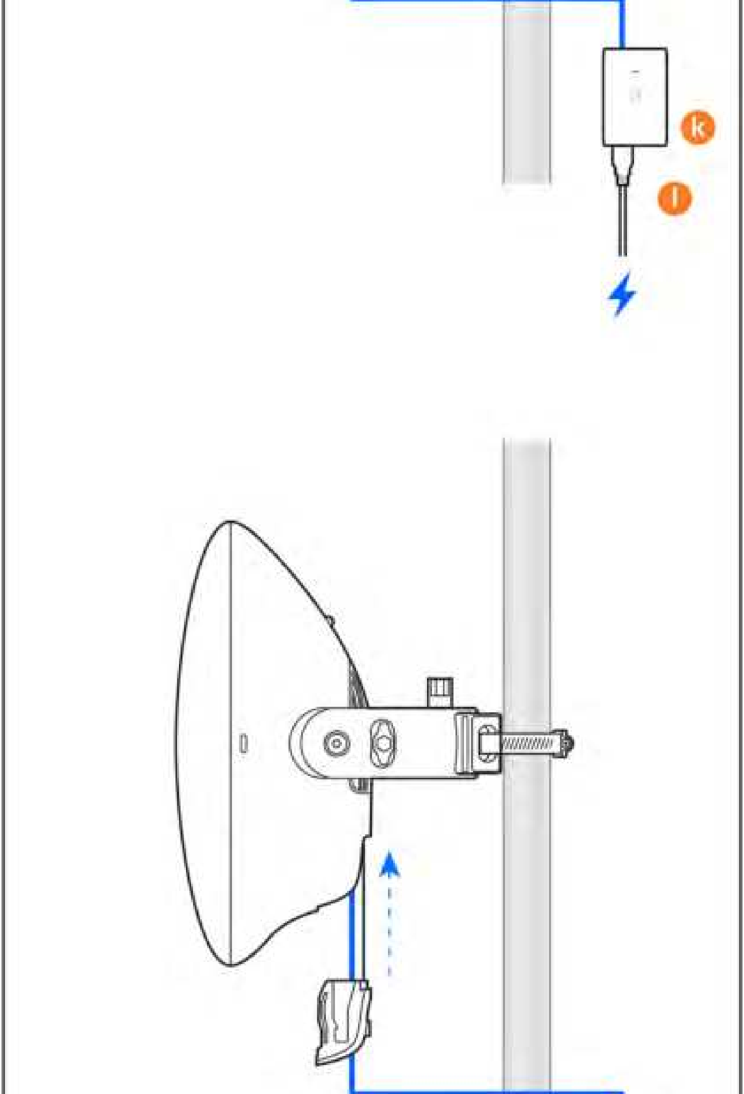

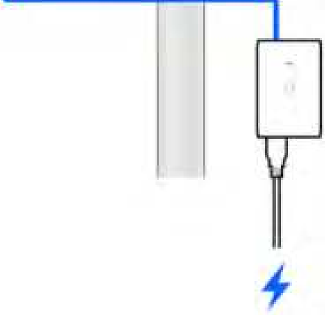

Ⓑ

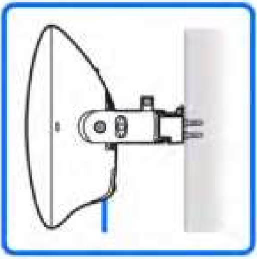

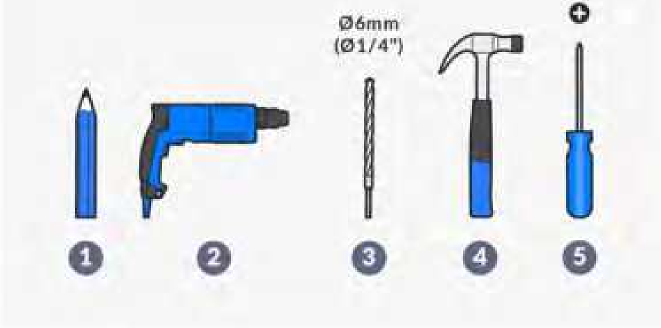
Ø6mm
(Ø1/4")
1
2
3
4
5

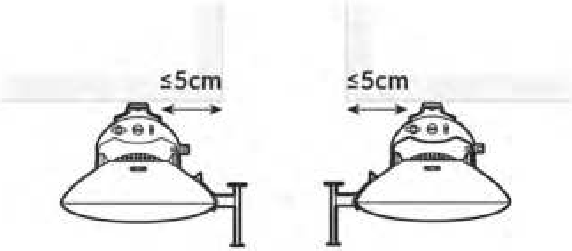

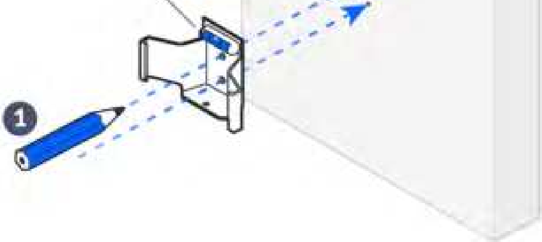

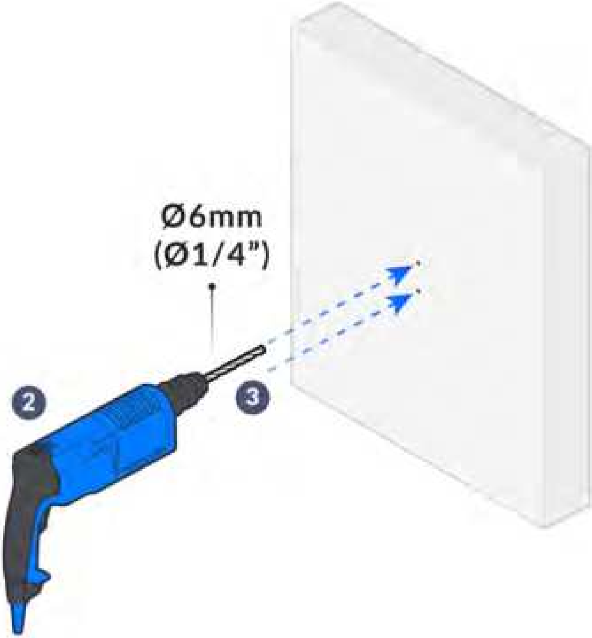

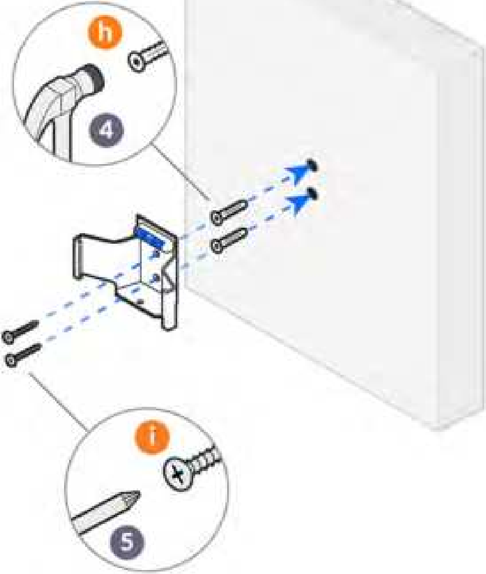

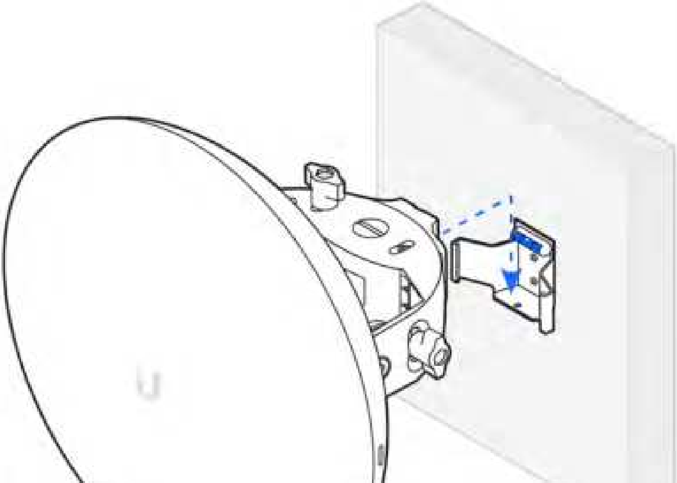

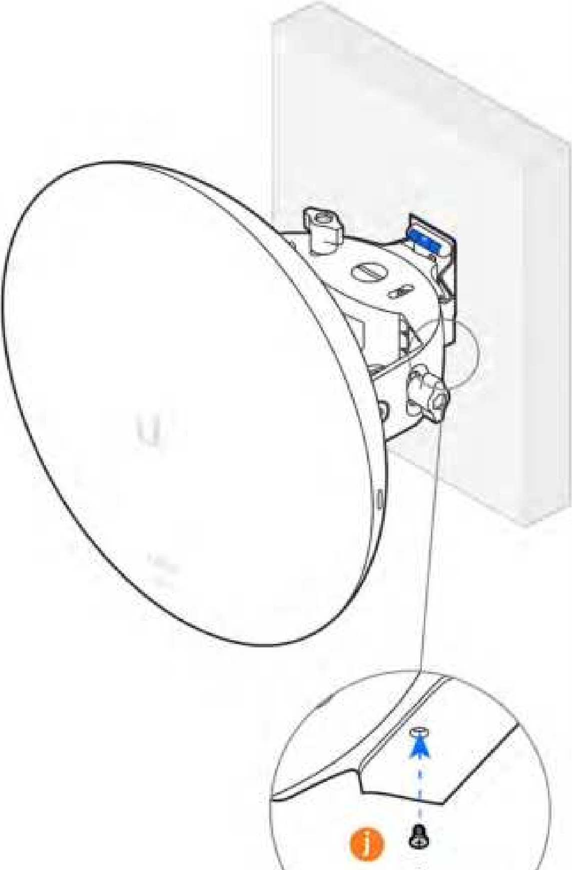

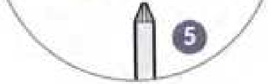

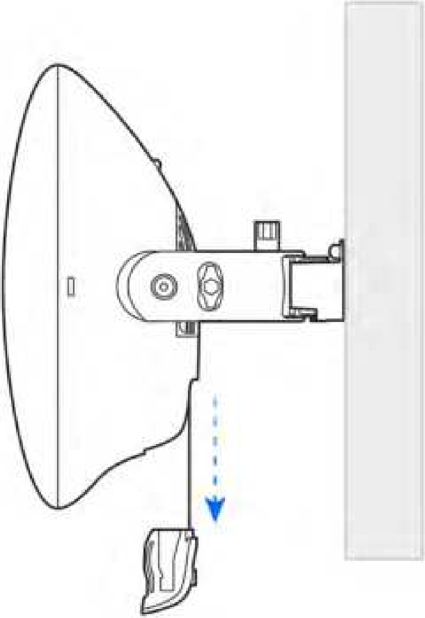

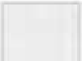

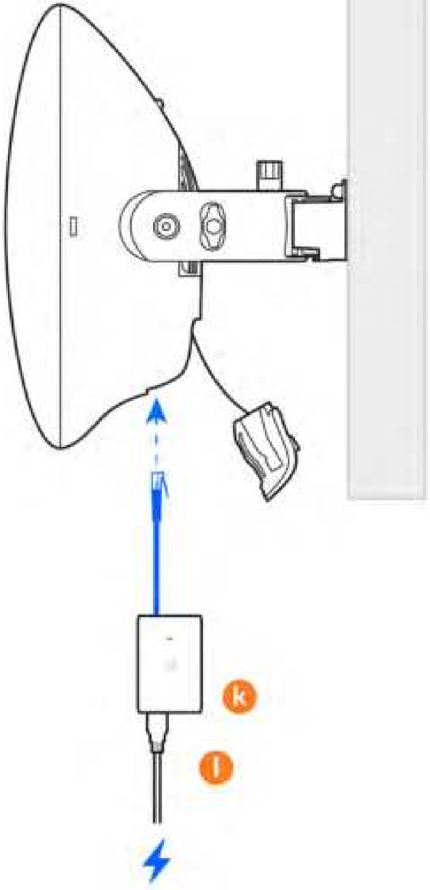

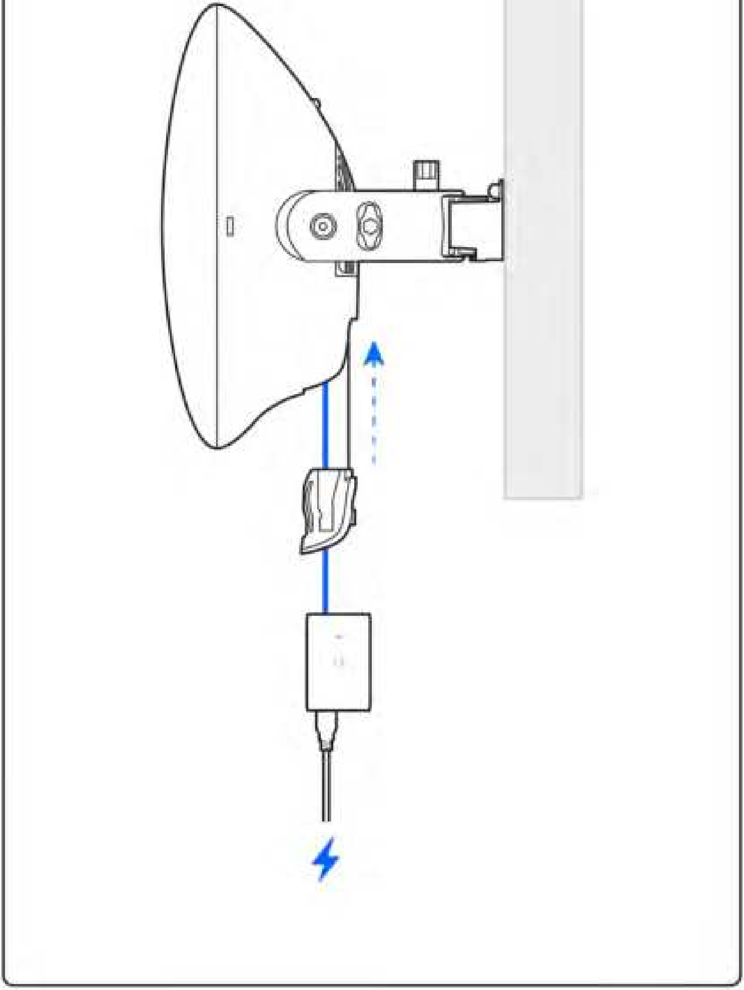

5

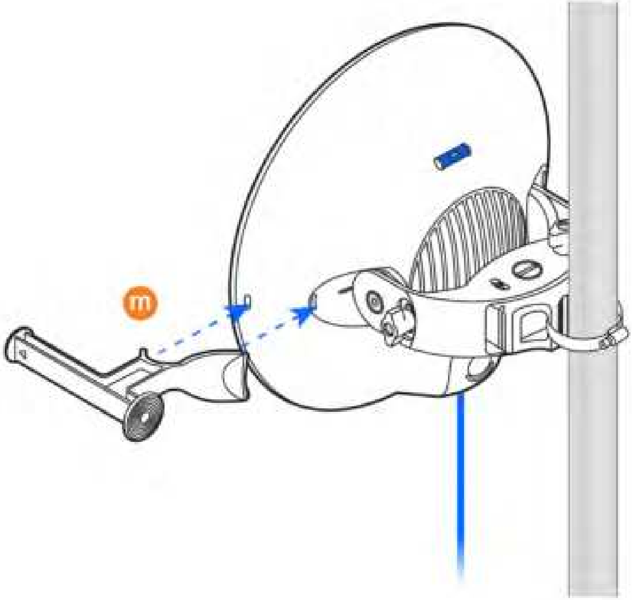

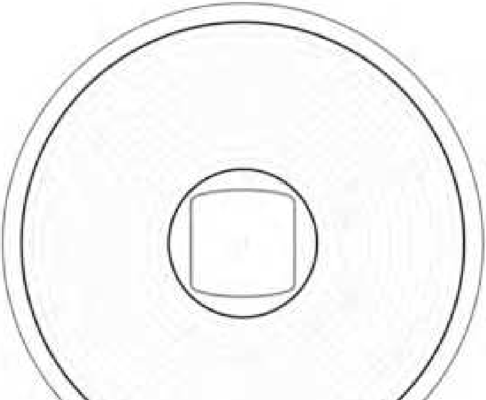

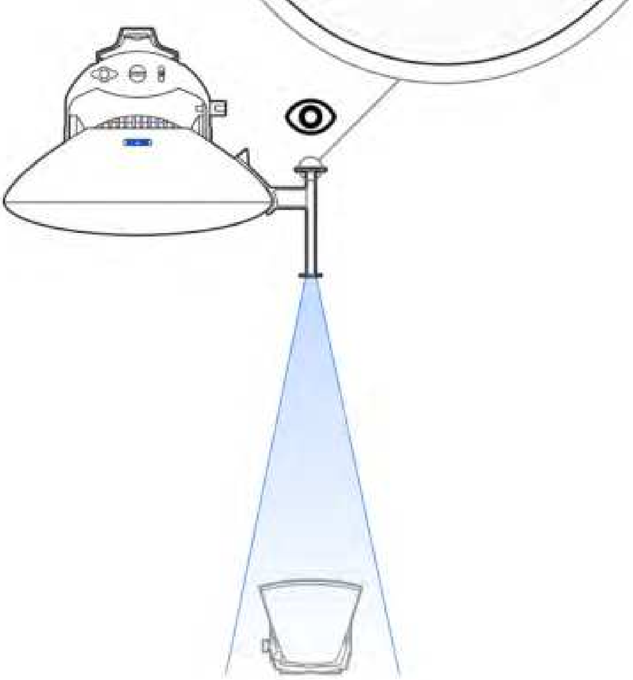

6

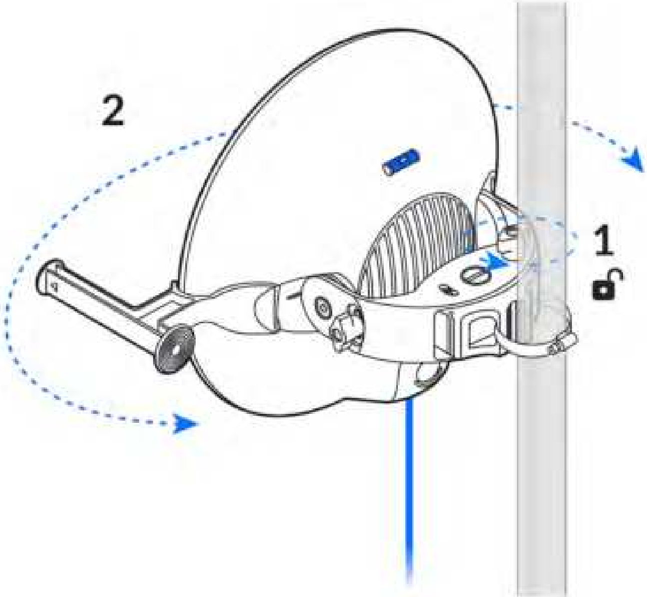

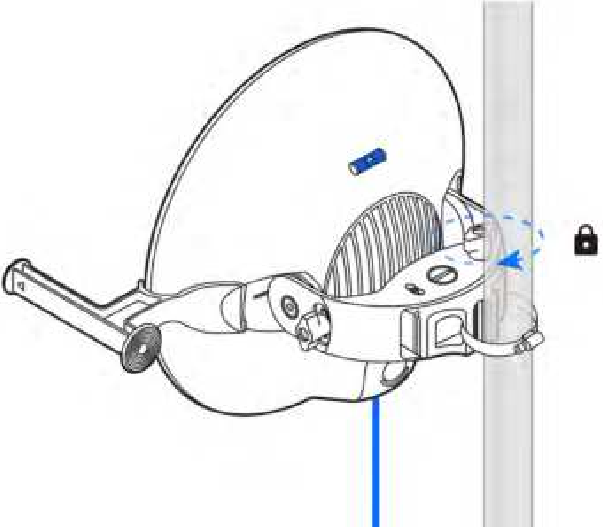

7

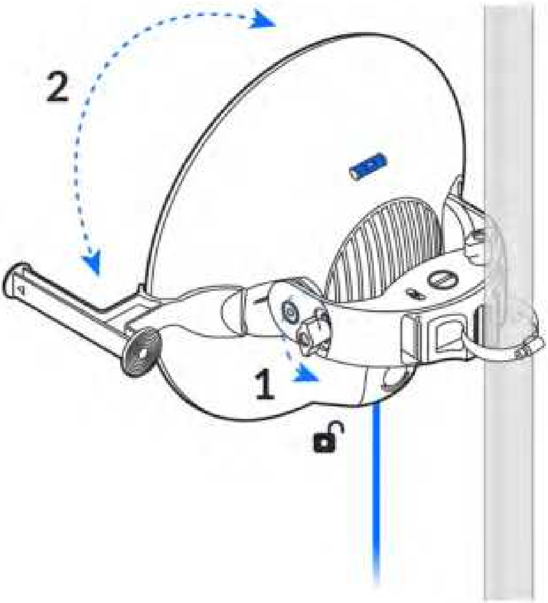

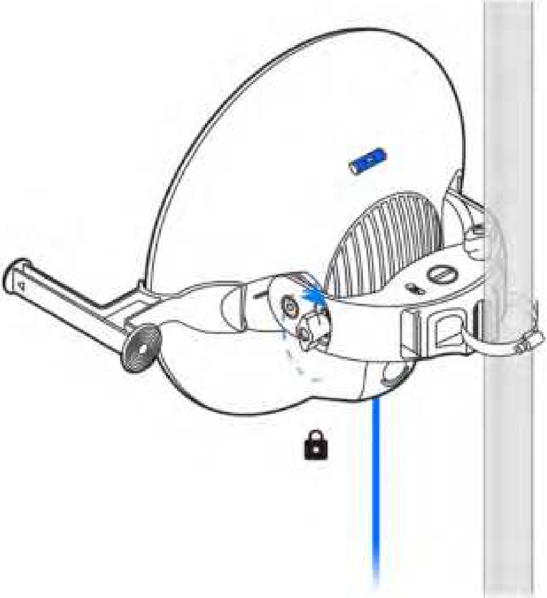

8

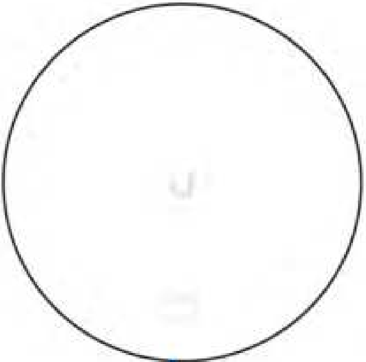

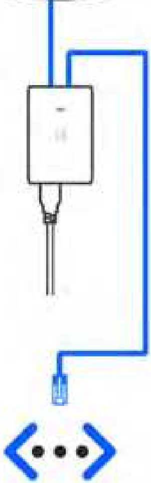

9

Download on the App Store

GET IT ON Google Play

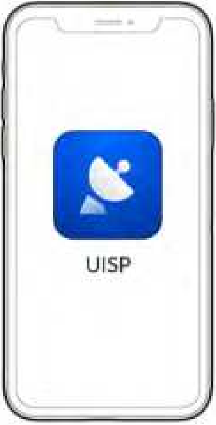

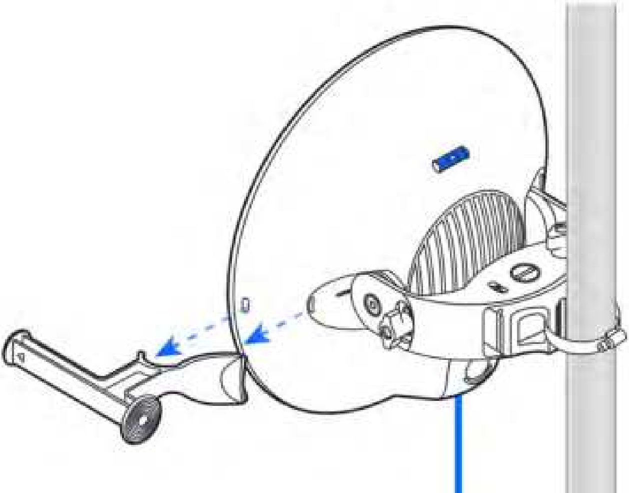

Get Answers
help.ui.com

UI Support