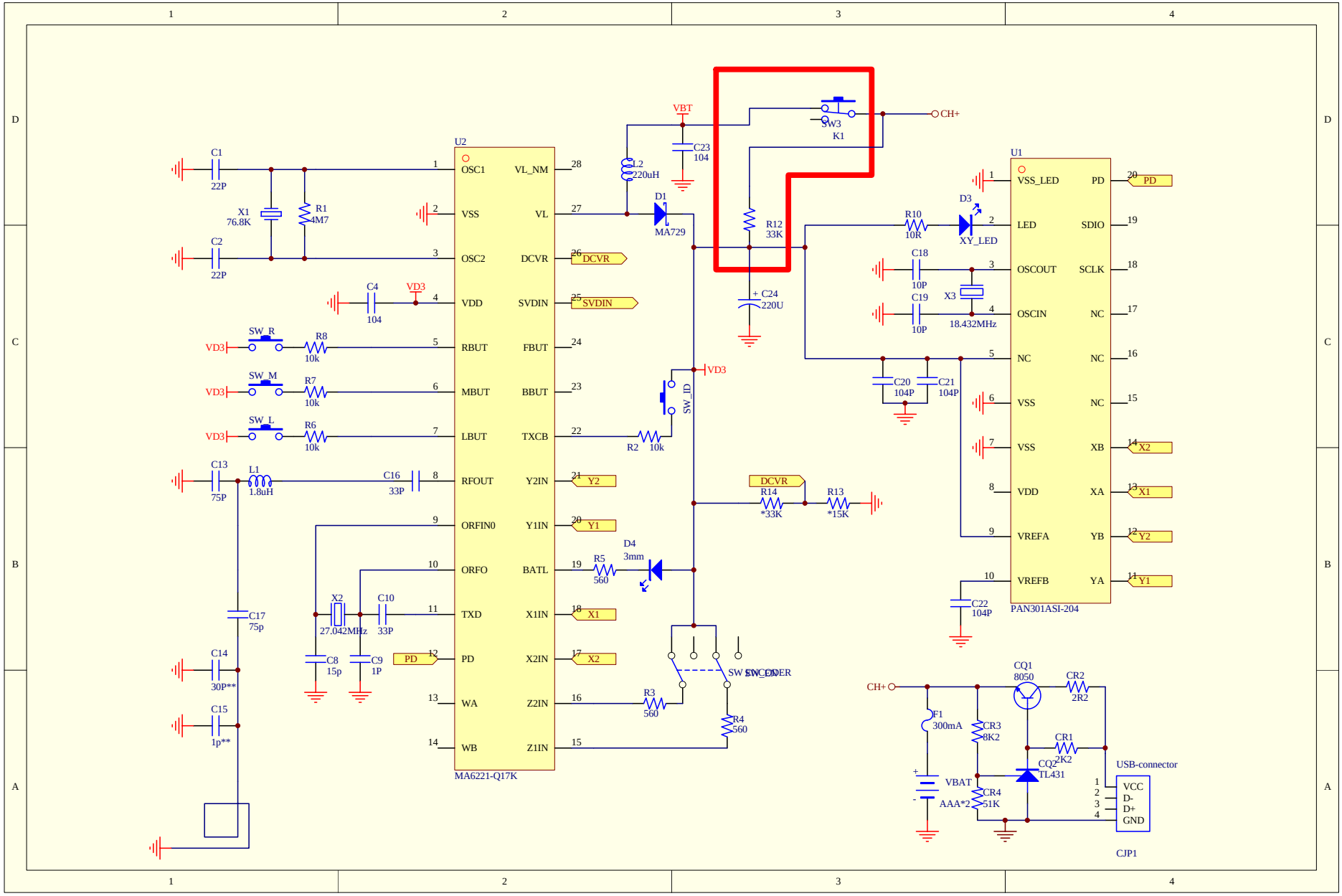
U2
MA6221-Q17K
OSC1
VSS
OSC2
VDD
RBUT
MBUT
LBUT
RFOUT
ORFIN0
ORFO
TXD
PD
WA
WB
VL_NM
VL
DCVR
SVDIN
FBUT
BBUT
TXCB
Y2IN
Y1IN
BATL
X1IN
X2IN
Z2IN
Z1IN
U1
PAN301ASI-204
VSS_LED
LED
OSCOUT
OSCIN
NC
VSS
VDD
VREFA
VREFB
PD
SDIO
SCLK
XB
XA
YB
YA
X2
X1
Y2
Y1
CH+
VBT
VD3
C1
22P
C2
22P
X1
76.8K
R1
4M7
C4
104
SW_R
R8
10k
SW_M
R7
10k
SW_L
R6
10k
C13
75P
L1
1.8uH
C16
33P
C17
75p
C14
30P**
C15
1p**
X2
27.042MHz
C10
33P
C8
15p
C9
1P
L2
220uH
C23
104
D1
MA729
R12
33K
C24
220U
SW_ID
R2
10k
D4
3mm
R5
560
R3
560
R4
560
SW_POWER
R14
*33K
R13
*15K
SW3
K1
R10
10R
D3
XY_LED
C18
10P
C19
10P
X3
18.432MHz
C20
104P
C21
104P
C22
104P
CQ1
8050
CR2
2R2
F1
300mA
CR3
8K2
CR1
2K2
CQ2
TL431
VBAT
AAA*2
CR4
51K
USB-connector
VCC
D-
D+
GND
CJP1