1. Mechanical Specification

1-1 Mechanical Configuration（A3947 BT-L Antenna）

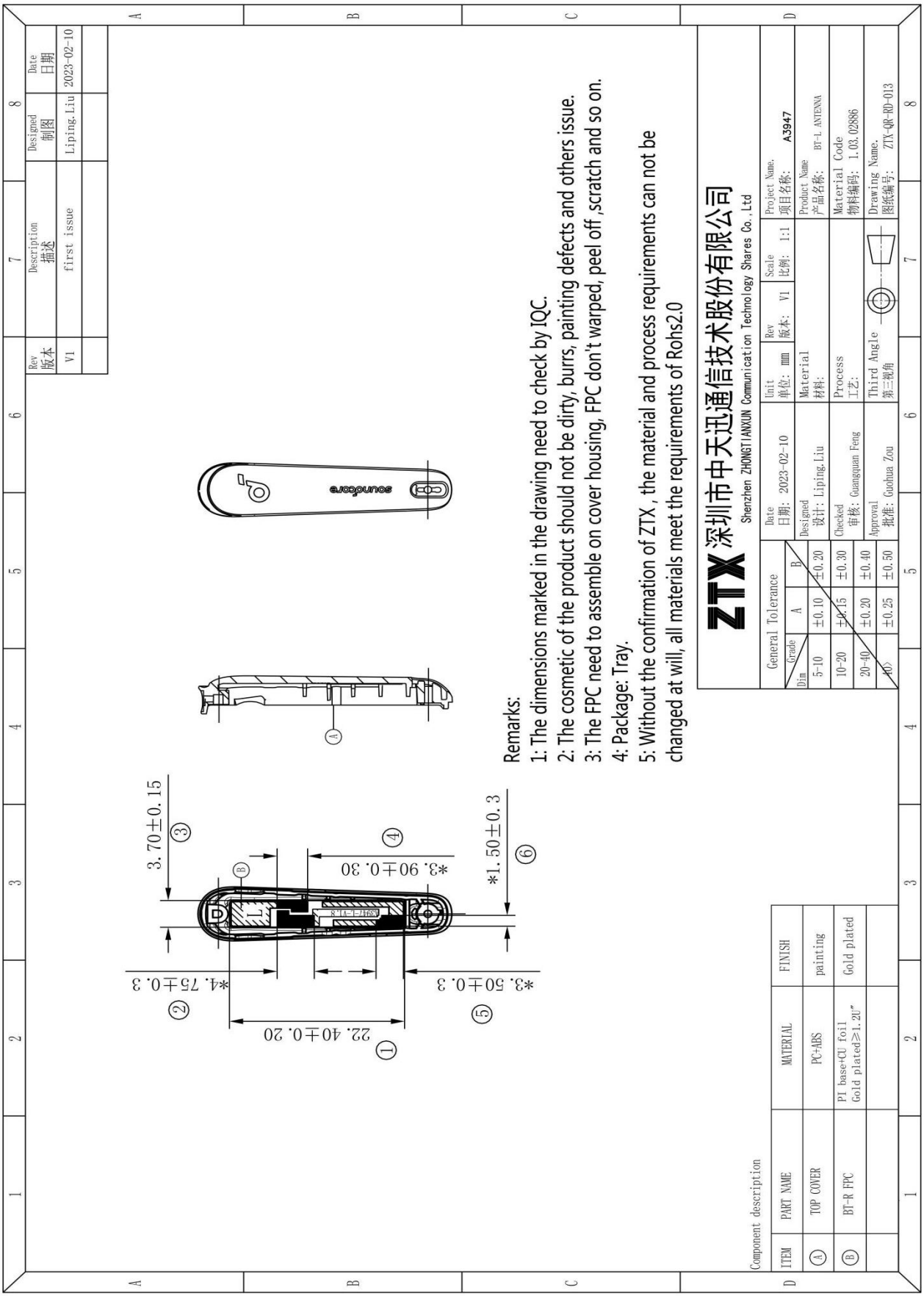

2.Test equipment

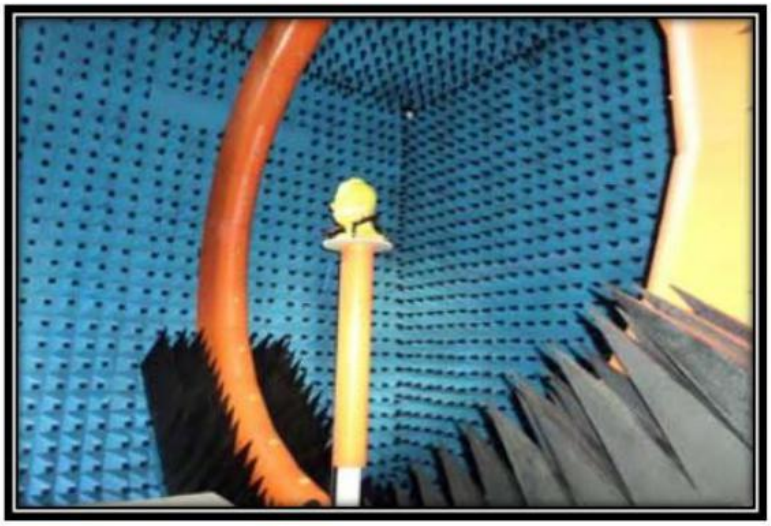

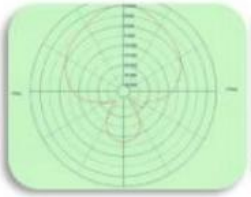

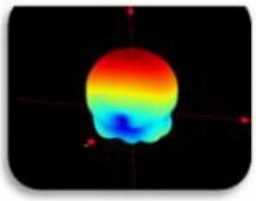

Owned 6 microwave dark room, equipped 2 sets world leading France Satimo SG24 OTA certification test systems（one in SHENZHEN, another one in Shanghai）, ETS OTA Standard test system，Blue test reverberation test system which is High repeatability, high accuracy and high resolution. It can quickly provide accurate test reports, fully meet the CTIA standards.

Testing range:

Support active, passive testing of GSM/CDMA/WCDMA/TD-SCDMA/LTE/WIFI/WLAN/WiMax/BT/GPS/MIMO/UWB within0.4-6G.

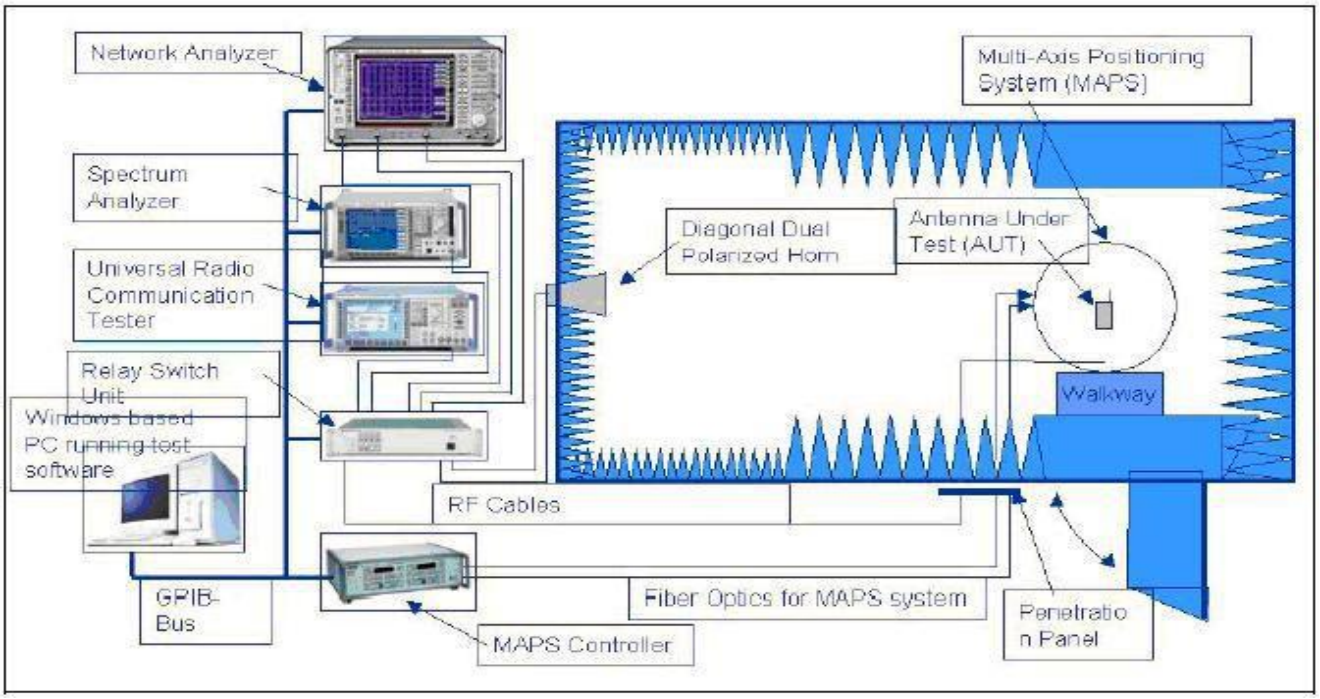

3.Test Results Surmmary

3-1 Active Test

Main board conduction	channel	TX	RX
BT-L	0	11.5	-93.5
	39	11.5	-93.5
	78	11.5	-93.5

free space	channel	TRP	TIS
BT-L	0	6.5	-88.5
	39	6.9	-88.3
	78	7.4	-88.6

The second generation of head	channel	TRP	TIS
BT-L	0	1.6	-83.5
	39	2.5	-83.4
	78	1.9	-83.8

3-2 Passive Test

Fre	Effi	Effi . dB	Gain.dB
2400	30%	-5.29	-1.20
2410	30%	-5.26	-1.32
2420	30%	-5.30	-1.18
2430	30%	-5.27	-1.24
2440	29%	-5.31	-1.37
2450	29%	-5.41	-1.19
2460	28%	-5.54	-1.26
2470	27%	-5.63	-1.80
2480	27%	-5.76	-1.75
2490	26%	-5.82	-2.00
2500	26%	-5.93	-1.93

3-4 VSWR&Return loss plot&Smith Chart

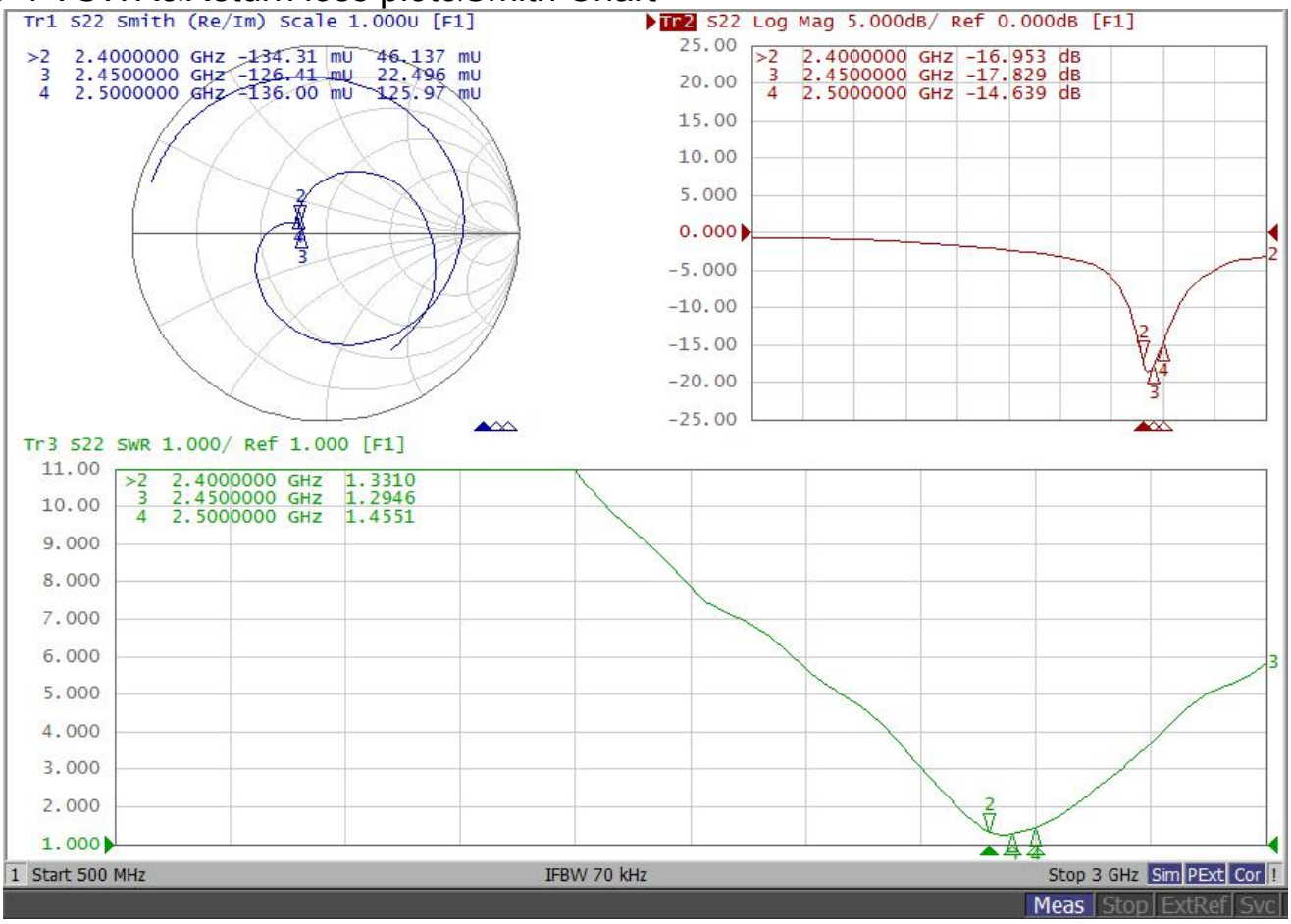

3-5 2D/3D Radiation Pattern Results

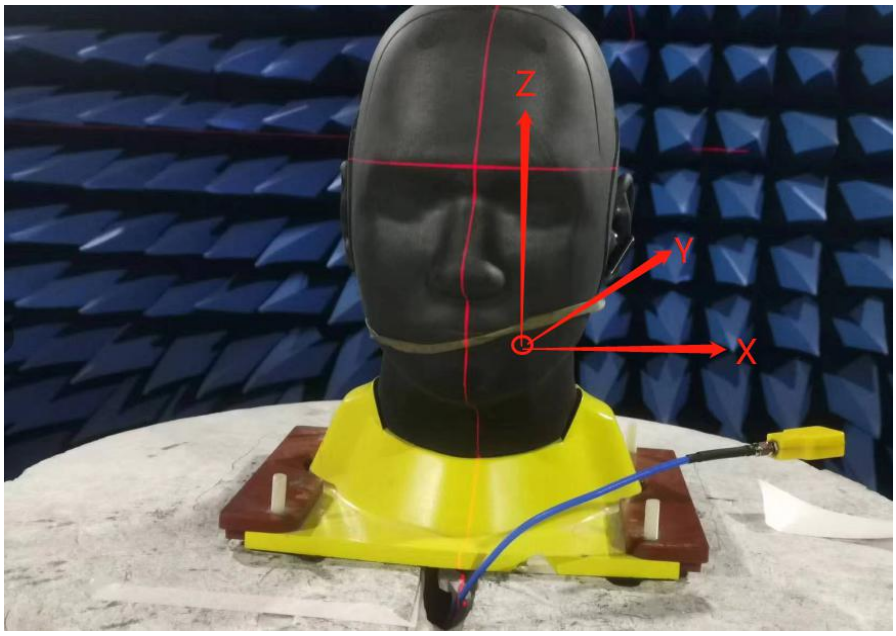

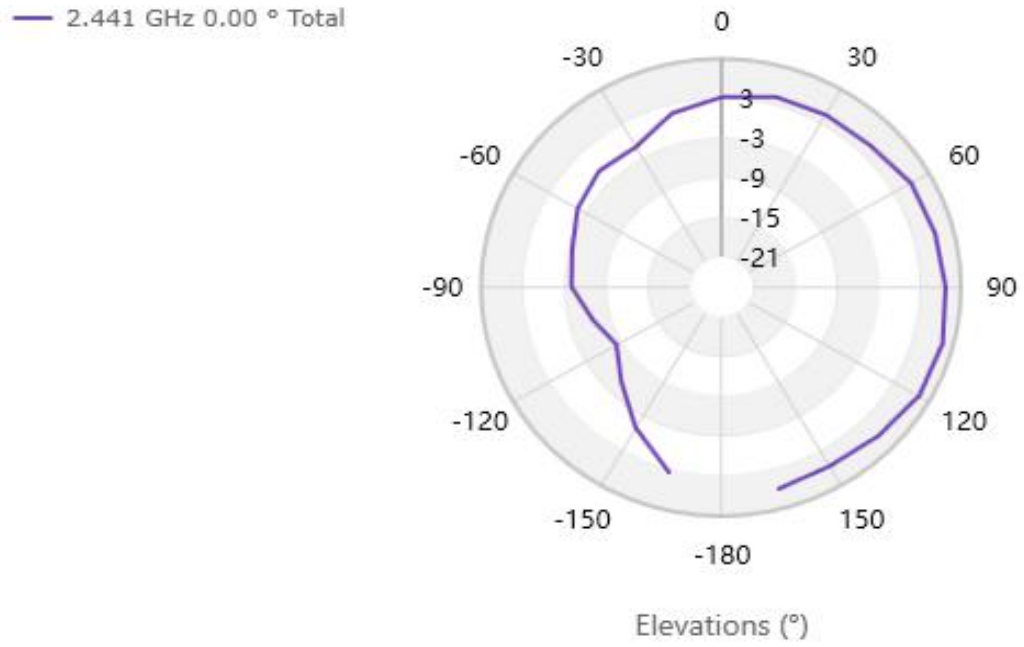

3-6 Environment treatment

N/A