REVISIONS			
LTR	DESCRIPTION	DATE	APPROVAL
A	ORIGNAL		
B	TOLERANCES CHANGED ✳	050113	JSP
C	Frontplate Text Changed 405035A-THD added	110923	JSP
D	CONNECTOR LAYOUT UPDATED	151005	JSP

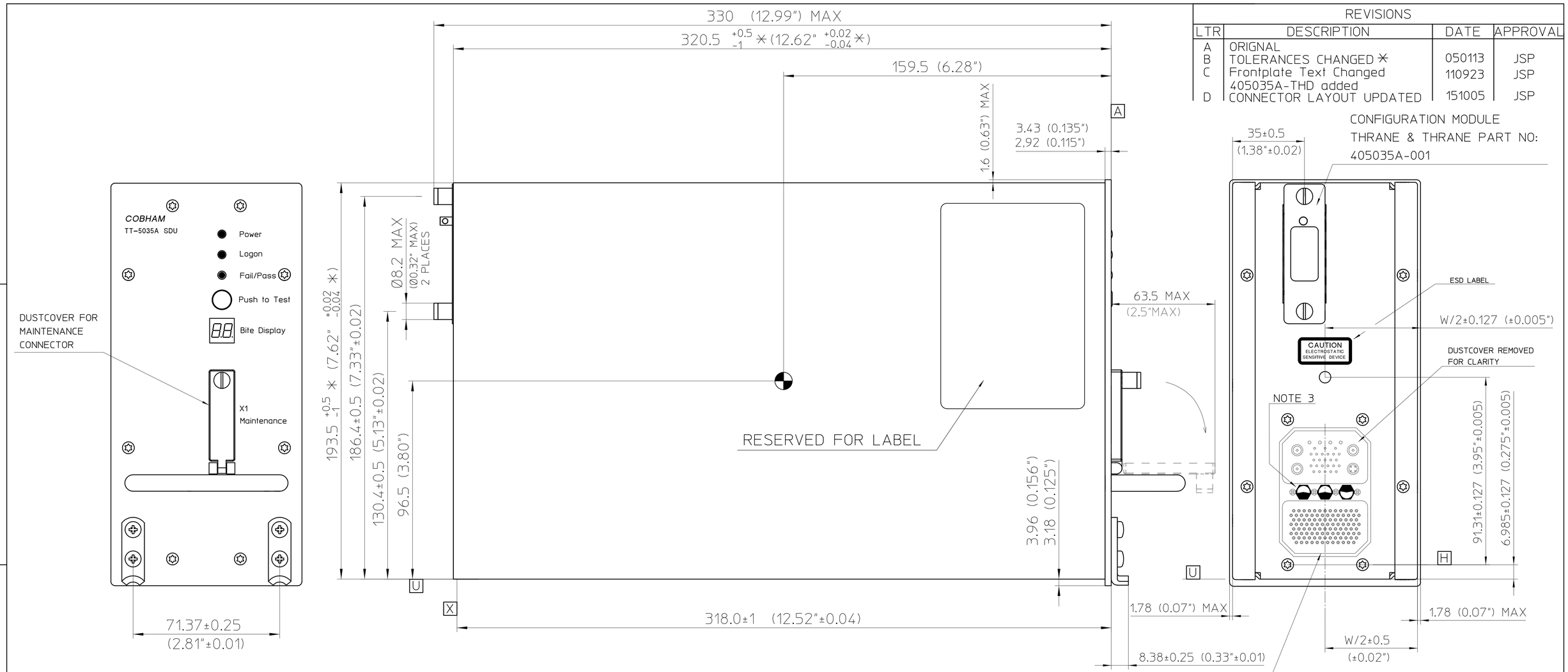

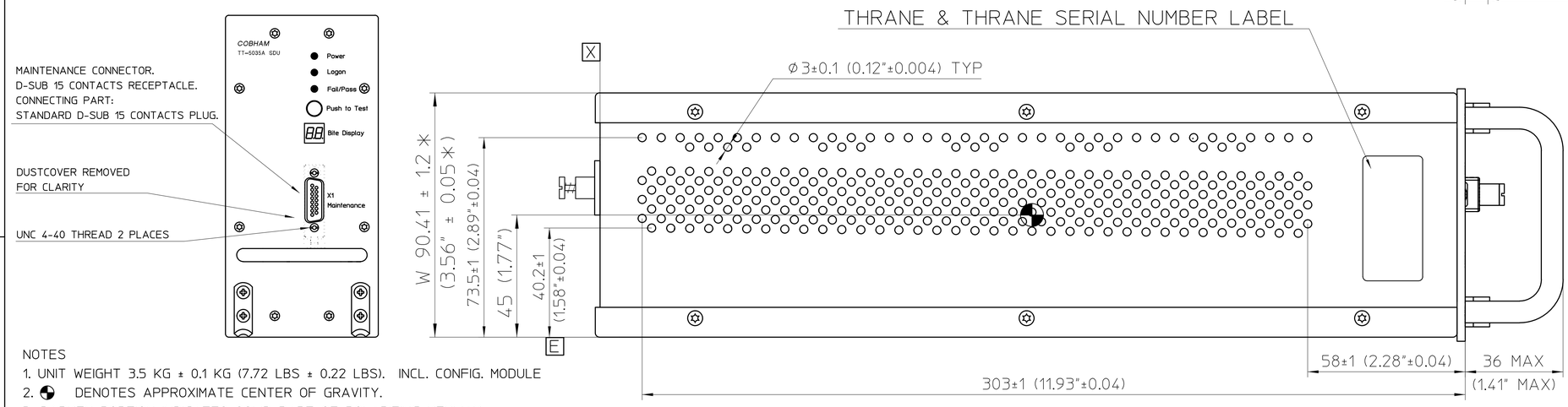

ITT CANNON PART NO.: DPX2NA-67322-604

CONNECTING PART

ITT CANNON PART NO.:
OLD VERSION: DPX2NA-67322-463
NEW IMPROVED VERSION: DPX2NA-67322-605

INDEX CODE 04

THRANE & THRANE
P/N 405035A & 405035A-THD

NOTES
1. UNIT WEIGHT 3.5 KG ± 0.1 KG (7.72 LBS ± 0.22 LBS). INCL. CONFIG. MODULE
2. ⊕ DENOTES APPROXIMATE CENTER OF GRAVITY.
3. DARKEN PORTION INDICATES SOLID PART OF POLARIZING KEYWAY.
4. THE TT-5035A INSTALLATION IS IN ACCORDANCE WITH ARINC 404A 3/8 SHORT ATR EXCEPT FOR: TOLERANCES MARKED WITH ✳, COOLING AIRHOLES ARE PLACED OUTSIDE RECOMMENDED AREA AND THE CONFIGURATION MODULE HARDWARE EXCEEDS THE UNIT REAR CASE PROJECTION OUTLINE AS NOTED ON DRAWING.
5. DIMENSIONS ARE IN MILLIMETERS. DIMENSIONS IN BRACKETS ARE INCHES.
6. UNIT MATERIAL: ALUMINIUM.
7. UNIT FINISH: PAINT EPOXYESTER PRIMER + BLACK INFRASOL TOPCOAT
8. DO NOT BLOCK COOLING AIR HOLES. FORCED COOLING IS NOT RECOMMENDED. COOLING AIR HOLES ARE PLACED IDENTICALLY ON TOP AND BOTTOM SIDE OF UNIT.

UNLESS OTHERWISE SPECIFIED DIMENSIONS AND TOLERANCES ARE IN ACCORDANCE WITH ARINC 404 3/8 SHORT ATR.

MATERIAL
SEE NOTES

DR.	Jesper Sundberg	000516
CH.	K. Blomgren	000516
AP.	Jesper Sundberg	030328
AP.		

FIRST ANGLE PROJECTION

Thrane & Thrane A/S
Telecommunications Engineering Copenhagen Denmark

TITLE: OUTLINE DRAWING
SDU UNIT TT-5035A
AERO HSD

SIZE	CODEIDENT NO.	DRAWING NO
A1		TT94-113370

SCALE 1:1 | SHEET 1 OF 1