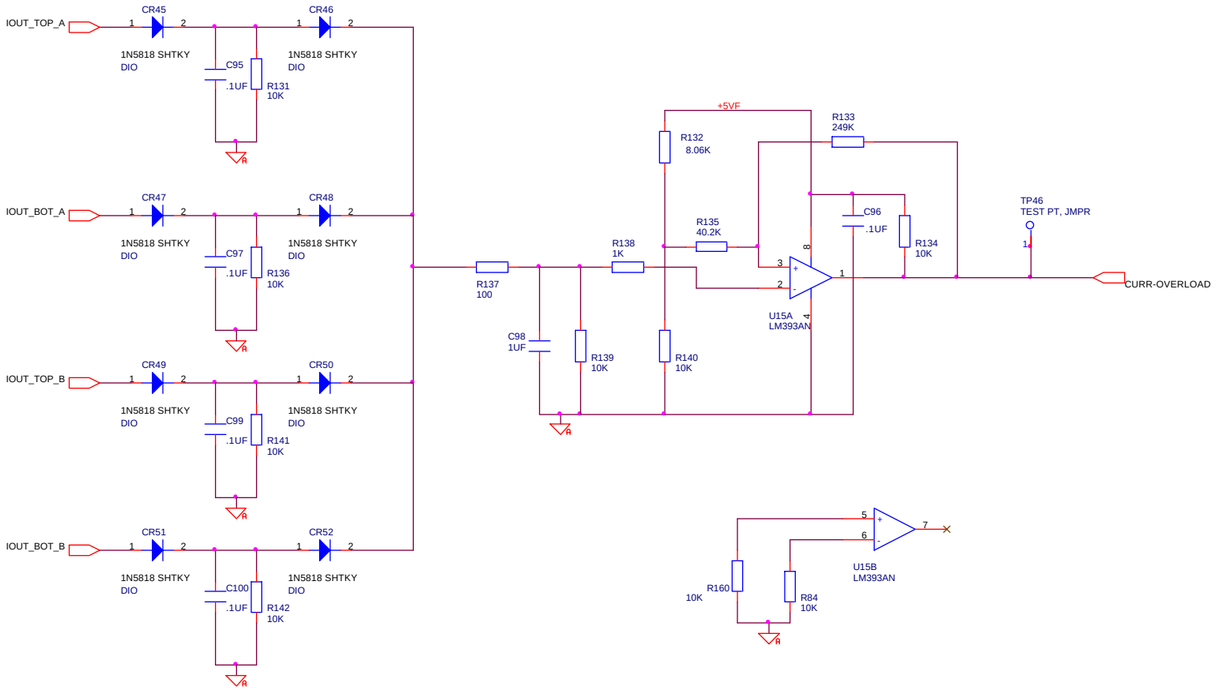


## Overtemperature Protection

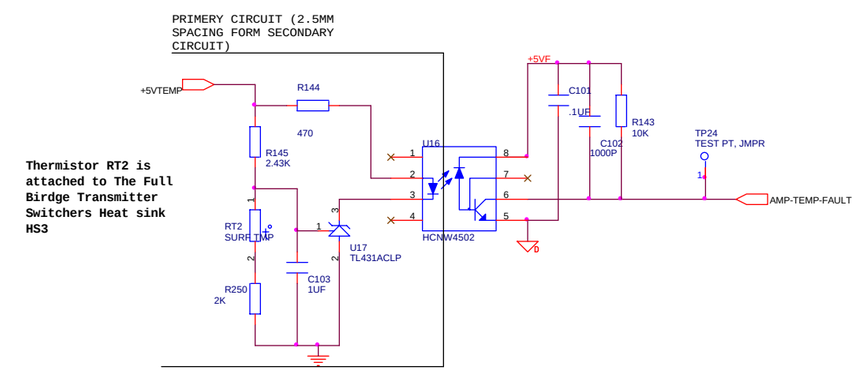


**Thermistor RT2 is attached to The Full Birdge Transmitter Switchers Heat sink HS3**

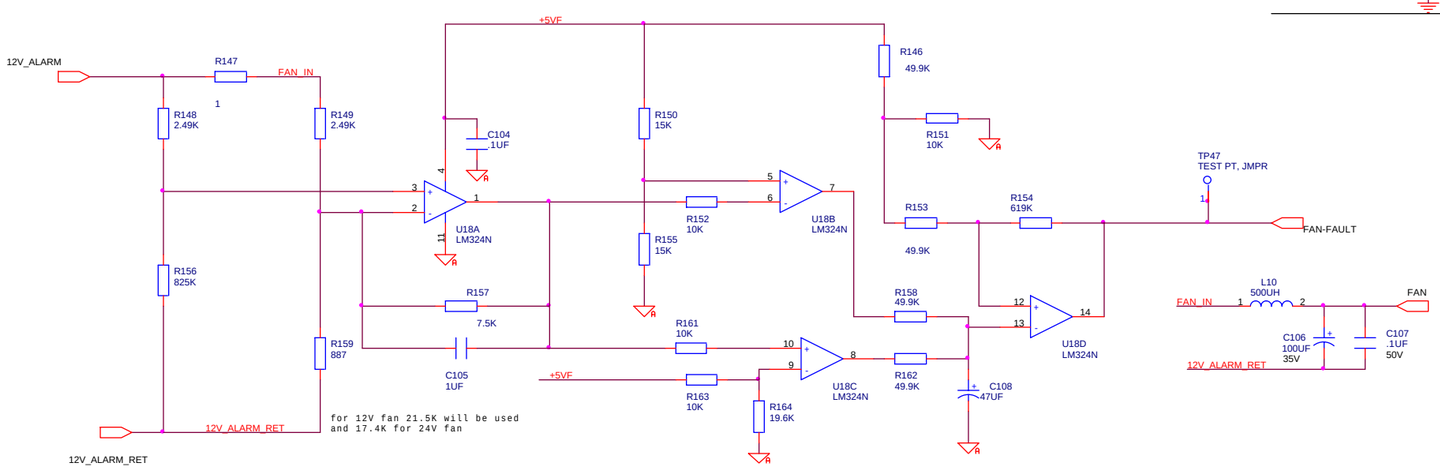


| | | |
|---|---|---|
| **Sensormatic Electronics Corp.**<br>951 YAMATO ROAD<br>BOCA RATON, FLORIDA 33431 | | |
| Title<br>**SCHEMATIC, ADS216 XMTR/PWR SUPPLY NE** | | |
| Size<br>C | Document Number<br>**S0301-1508-01** | Rev<br>**3C** |
| Date: Monday, February 07, 2000 | Sheet 6 of 6 | |