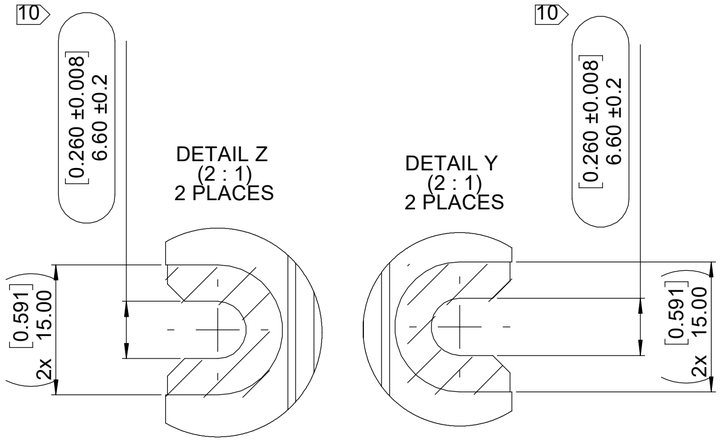

1 MARKED AREA IS DESIGNATED FOR IDENTIFICATION NAMEPLATE. FOR CONTENT DETAILS OF NAMEPLATE REFER TO DRAWING C-ACY242-PD-001

2 HATCHED AREA FOR BONDING PROVISION:
MAX BONDING RESISTANCE BETWEEN UNIT BONDING PROVISION AND A/C STRUCTURE: 2.5 milli OHMS.

3 ESTIMATED STAY-OUT ZONE FOR MATING CONNECTOR IS 70.00 MM

4 UNIT IS DESIGNED FOR ACTIVE STAND ALONE COOLING: VENTILATION INLET AND OUTLET MUST NOT BE COVERED. FREE AIRFLOW INTO THE UNIT MUST BE ASSURED. 0.9 INCH RECOMMENDED MINIMAL SPACING TO ALLOW NORMAL CONVECTION COOLING.
COMPARTMENT RECOMMENDED TO BE VENTILATED WITH MINIMUM 12.6 CFM. HEAT DISSIPATION: 126 WATT
ARROW SHOWS RECOMMENDED COMPARTMENT AIRFLOW DIRECTION

5 MAX CURRENT WITHOUT EXTERNAL LOAD: 9A AT 28VDC
MAX CURRENT IDLE MODE WITHOUT SPEAKER: 2A AT 28VDC
MAX CURRENT WITH AMPLIFIER (6 CHANNELS, 7W/CHANNEL) 6A AT 28VDC

6 MATERIALS AND FINISH:
HOUSING MATERIAL: 3.3535 (EN-AW 5754) O/H111 (AlMg3 W19)
SURFACE TREATMENT: SURTEC 650 chromitAL TCP
POWDER COATING: INTERPON A2206 MNA03D
REFER TO C-ACY242-AD-006 FOR SURFACE QUALITY DEFINITION.

7 AMBIENT OPERATING TEMPERATURE RANGE WITHOUT DEGRADATION:
-15°C TO +55°C (+5°F TO +131°F)

8 CONNECTORS:

CONNECTOR J1: Power Input and ID Settings
TYPE: 17W2 Pin male D-Sub shell B with locking clamps

CONNECTOR J2: Audio
TYPE: D-Sub HD 36W4 Female with locking clamps

CONNECTOR J3: Arinc, RS485, RS232 & 2x USB2.0
TYPE: D-Sub HD 44pin Female with locking clamps

CONNECTOR J4: Video & USB & Power
TYPE: D-Sub HD 15pin Female with locking clamps

CONNECTOR J5: Discrete IOs
TYPE: D-Sub HD 44pin Male with locking clamps

CONNECTOR J61 to J64: Ethernet
TYPE: TERA 8P

CONNECTOR J7
TYPE: USB Type A

CONNECTOR J8
TYPE: USB Type C

CONNECTOR J91 to J93
TYPE: TNC for external Antennas

CONNECTOR J10: HD Base-T
TYPE: Mini I/O HDR Type -I 8 pin

REFER TO C-ACY242-AD-003 FOR THE CONNECTOR P/N DETAILS

Revision History

Rev. No.	Description
0	28 May 2024 - Initial Release
1	30 May 2024 - Detail Z&Y: Dimension and tolerances of attachment points updated.
2	06 Aug 2024 - Caution label and Nameplate 3D view added.
3	12 Sep 2024 - FCC Label and flag note 12 added.

9 RECOMMENDED SCREW THREAD SIZE FOR MOUNTING: 1/4"-28
LRU MUST BE INSTALLED USING ALL (4 EA) MOUNTING POINTS.
IF NOT OTHERWISE STATED, FOLLOWING MAXIMUM TORQUE VALUES FOR MOUNTING OF UNIT APPLY.
NOTE: CHECK MAXIMUM ALLOWABLE TORQUE VALUE OF MOUNTING COUNTERPART BEFORE INSTALLATION.

THREAD SIZE	TORQUE VALUE (INCH POUND)	TORQUE VALUE (Nm)
1/4"-28	62.4	7

10 FOR DIMENSION INSPECTION METHOD REFER TO ACCEPTANCE TEST PROCEDURE C-ACY242-ATP

11 MARKED AREA IS DESIGNATED FOR CAUTION LABEL. FOR CONTENT DETAILS OF LABEL REFER TO DRAWING C-ACQ099-PD-010

12 MARKED AREA IS DESIGNATED FOR FCC LICENSE LABEL. FOR CONTENT DETAILS OF LABEL REFER TO DRAWING C-ADF159-PD-001

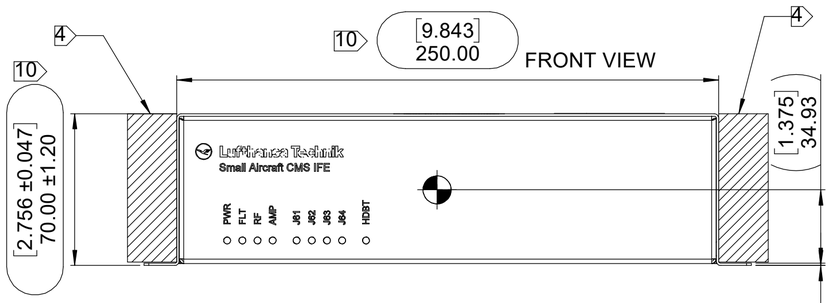

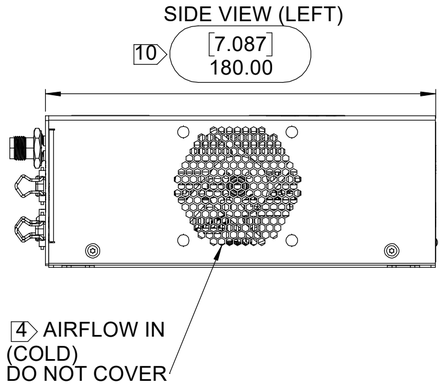

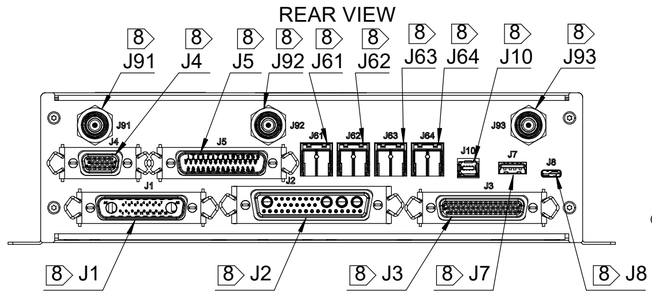

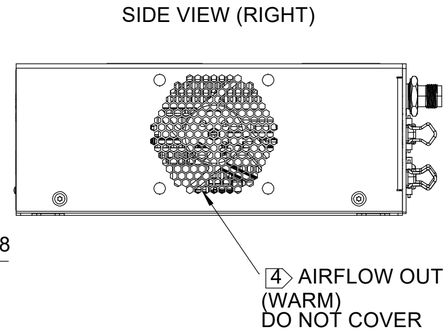

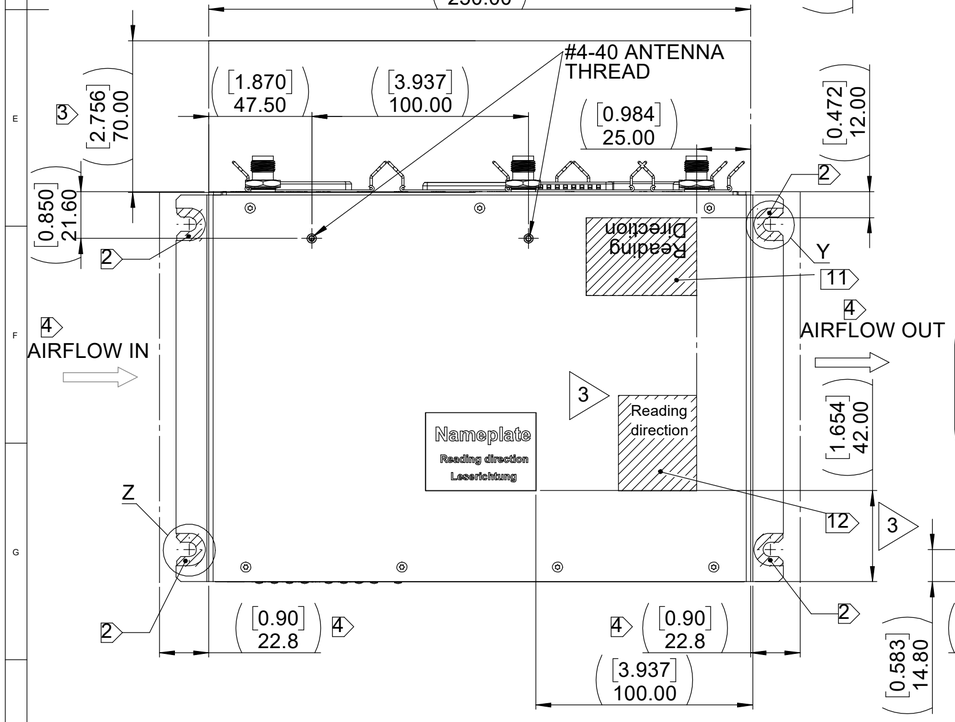

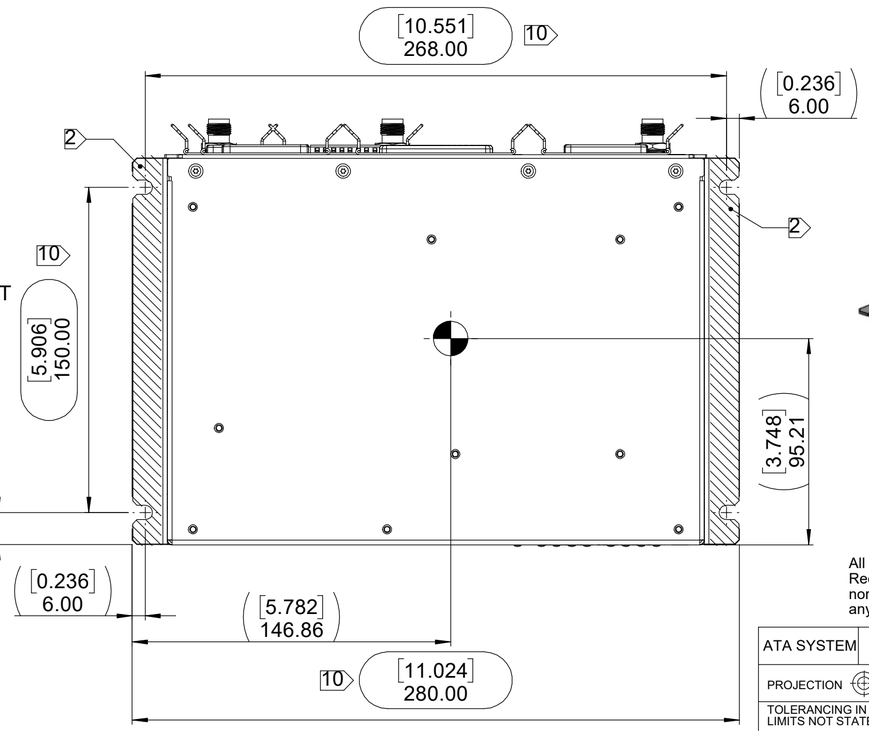

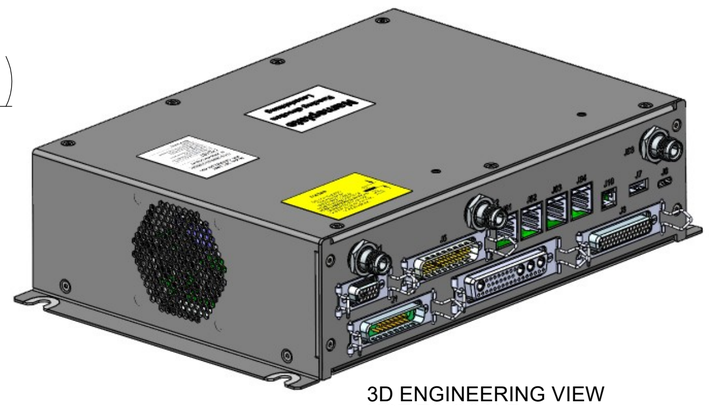

3D ENGINEERING VIEW
NOT TO SCALE

- SYMBOL FOR ESTIMATED CENTER OF GRAVITY

WEIGHT: 2.09 KG +/- 0.04 KG 4.61 LBS +/- 0.09 LB

DIMENSIONS ARE IN METRIC UNITS (MILLIMETERS)
DIMENSIONS IN SQUARE BRACES [ ] ARE IN INCHES
DIMENSIONS IN ROUND BRACES ( ) ARE AUXILIARY DIMENSIONS
DIMENSIONS IN BUBBLES ⬭ ARE INSPECTION DIMENSIONS

TOLERANCES IN ACCORDANCE WITH DIN ISO 2768cL AS IN FOLLOWING UNLESS OTHERWISE STATED:

NOMINAL SIZE RANGE IN		TOLERANCE IN	
MM	INCH	MM	INCH
> 3 - 6	> 0.118 - 0.236	± 0.30	± 0.012
> 6 - 30	> 0.236 - 1.181	± 0.50	± 0.020
> 30 -120	> 1.181 - 4.724	± 0.80	± 0.032
> 120 - 400	> 4.724 - 15.748	± 1.20	± 0.048

Electronic Signature (Optional)
Digitally signed by:
Schulze, Mario
Date: 12 Sep 2024

All content is property of Lufthansa Technik AG. All rights are reserved by Lufthansa Technik AG. Recipient by accepting this document agrees that neither this document nor the information disclosed herein nor any part thereof shall be reproduced or transfered to other documents or used or disclosed to others for any purpose unless specifically authorized in writing by Lufthansa Technik AG.

ATA SYSTEM	44		CODE	
PROJECTION		MSN		FSCM NO. C1008

TOLERANCING IN ACCORDANCE WITH ISO 8015
LIMITS NOT STATED DIN ISO 2768-cL

ANY USE OF THE INCLUDED INFORMATION BEING PROPRIETARY TO LUFTHANSA TECHNIK AG IS PROHIBITED UNLESS APPROVED IN WRITING.

Lufthansa Technik

TITLE
INTERFACE CONTROL DRAWING
Small Aircraft CMS/IFE P/N: SAC0522-001-001

	NAME	SIGN	TEL	DATE
PREPARED BY	Nitsch, Marvin		10089	28.05.2024
Responsible for Design	Schulze, Mario			12.09.2024

SIZE A2 | DWG NO. C-ACY242-AD-001

REV. NO. 3 | ALT DN | SCALE 1:2 | CAD GENERATED DRAWING (SRX), DO NOT MANUALLY UPDATE

Archive SAP/FileNet