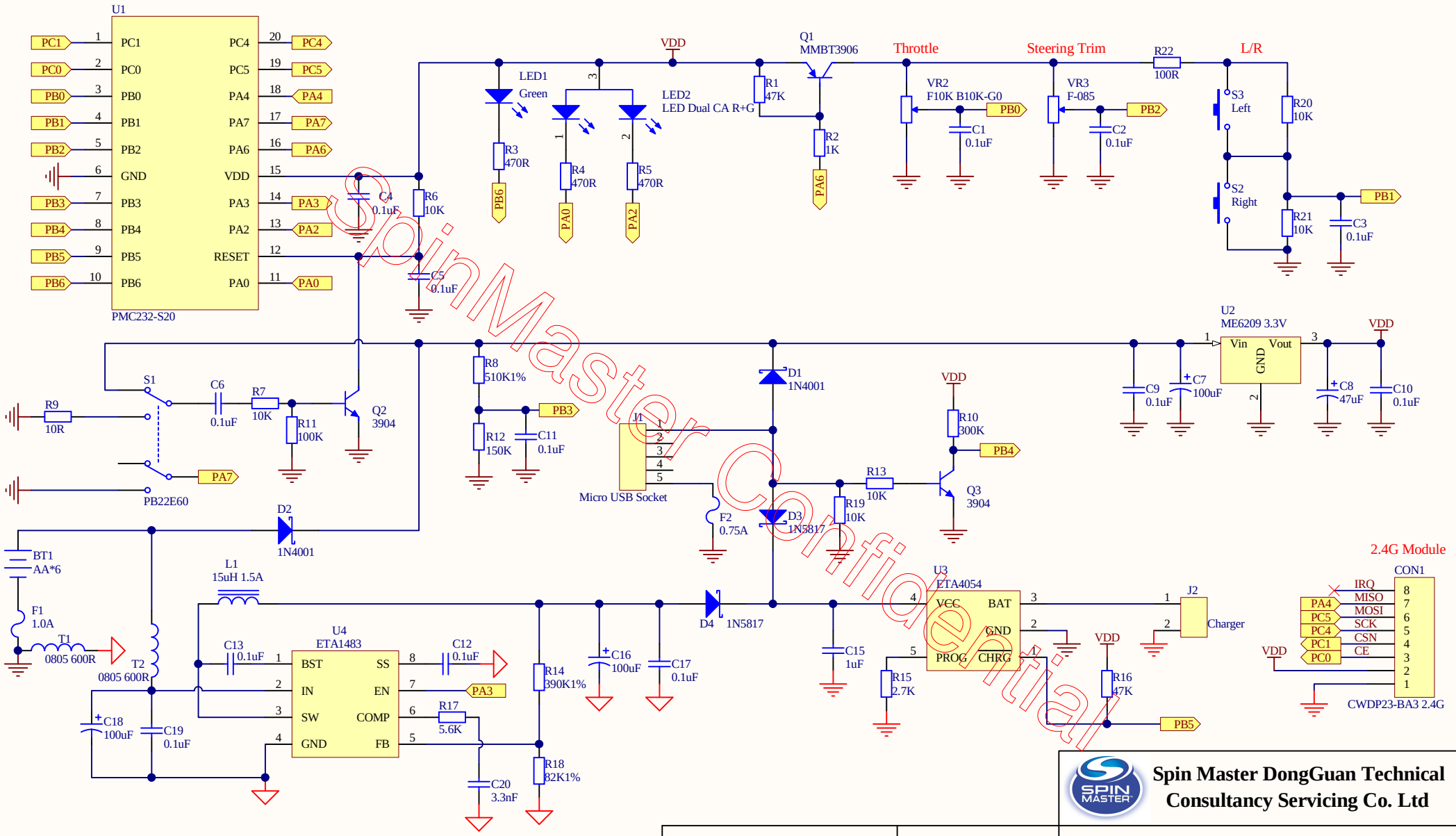


SpinMaster Confidential

Reamrk: 1. Charge current: 500MA+/-30MA.

**Spin Master DongGuan Technical Consultancy Servicing Co. Ltd**

| | | | | | |
|---|---|---|---|---|---|
| **Drawing By:** Jonye Hu | **Date:** 2015-7-17 | **Title:** Star Wars Tie Fighter RX | | | |
| **Checked By:** | **Date:** | **Model NO:** 44557 | | | |
| **Approved By:** | **Date:** | **Size** A4 | **Sheet** 1 **of** 1 | **Revision** R02 | |

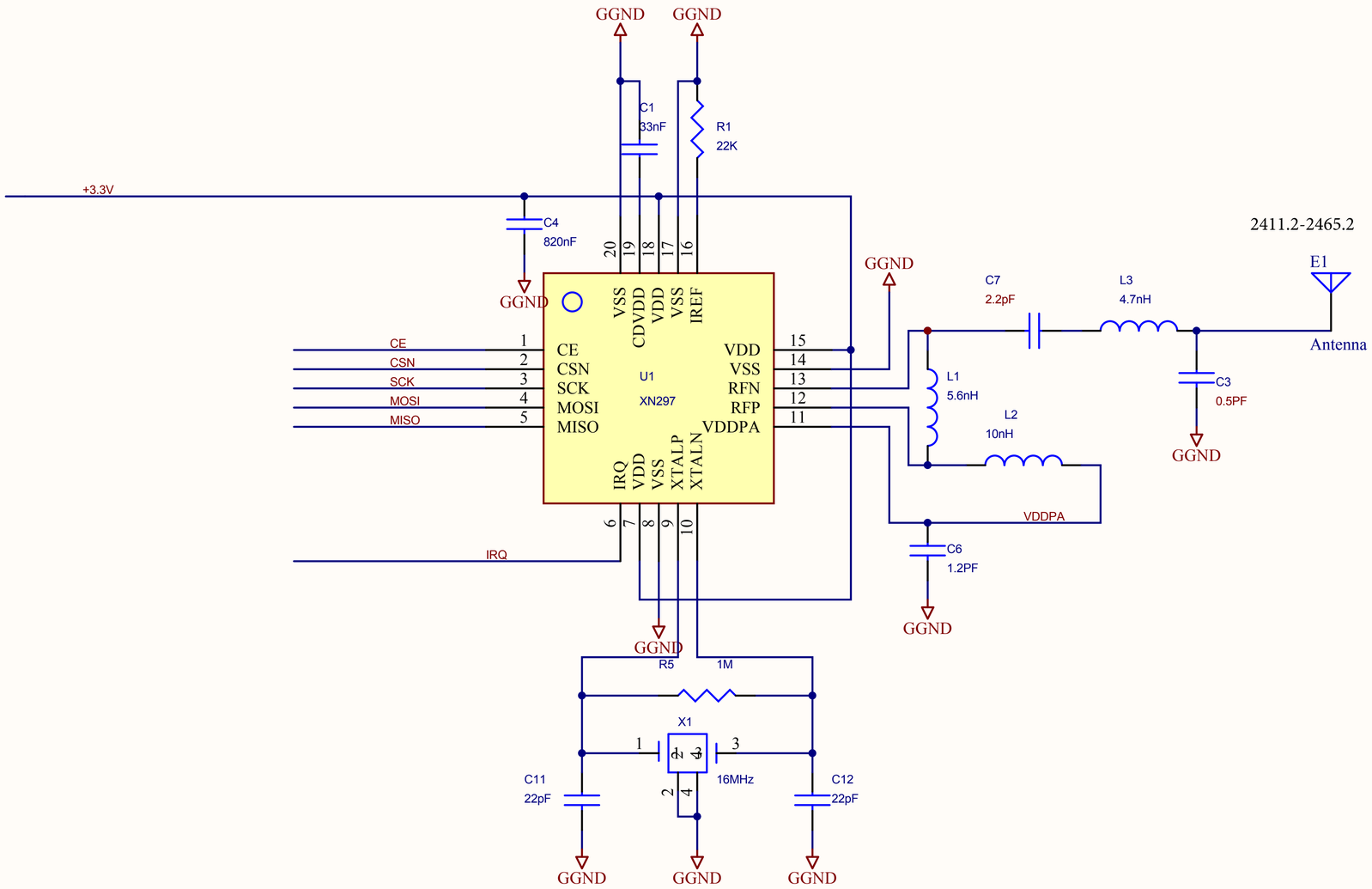
GGND
GGND
C1
33nF
R1
22K
+3.3V
C4
820nF
GGND
20
19
18
17
16
VSS
CDVDD
VDD
VSS
IREF
CE
CSN
SCK
MOSI
MISO
1
2
3
4
5
CE
CSN
SCK
MOSI
MISO
U1
XN297
VDD
VSS
RFN
RFP
VDDPA
15
14
13
12
11
IRQ
VDD
VSS
XTALP
XTALN
6
7
8
9
10
IRQ
GGND
GGND
R5
1M
X1
1
3
2
4
16MHz
C11
22pF
C12
22pF
GGND
GGND
GGND
GGND
C7
2.2pF
L3
4.7nH
2411.2-2465.2
E1
Antenna
L1
5.6nH
L2
10nH
C3
0.5PF
GGND
VDDPA
C6
1.2PF
GGND