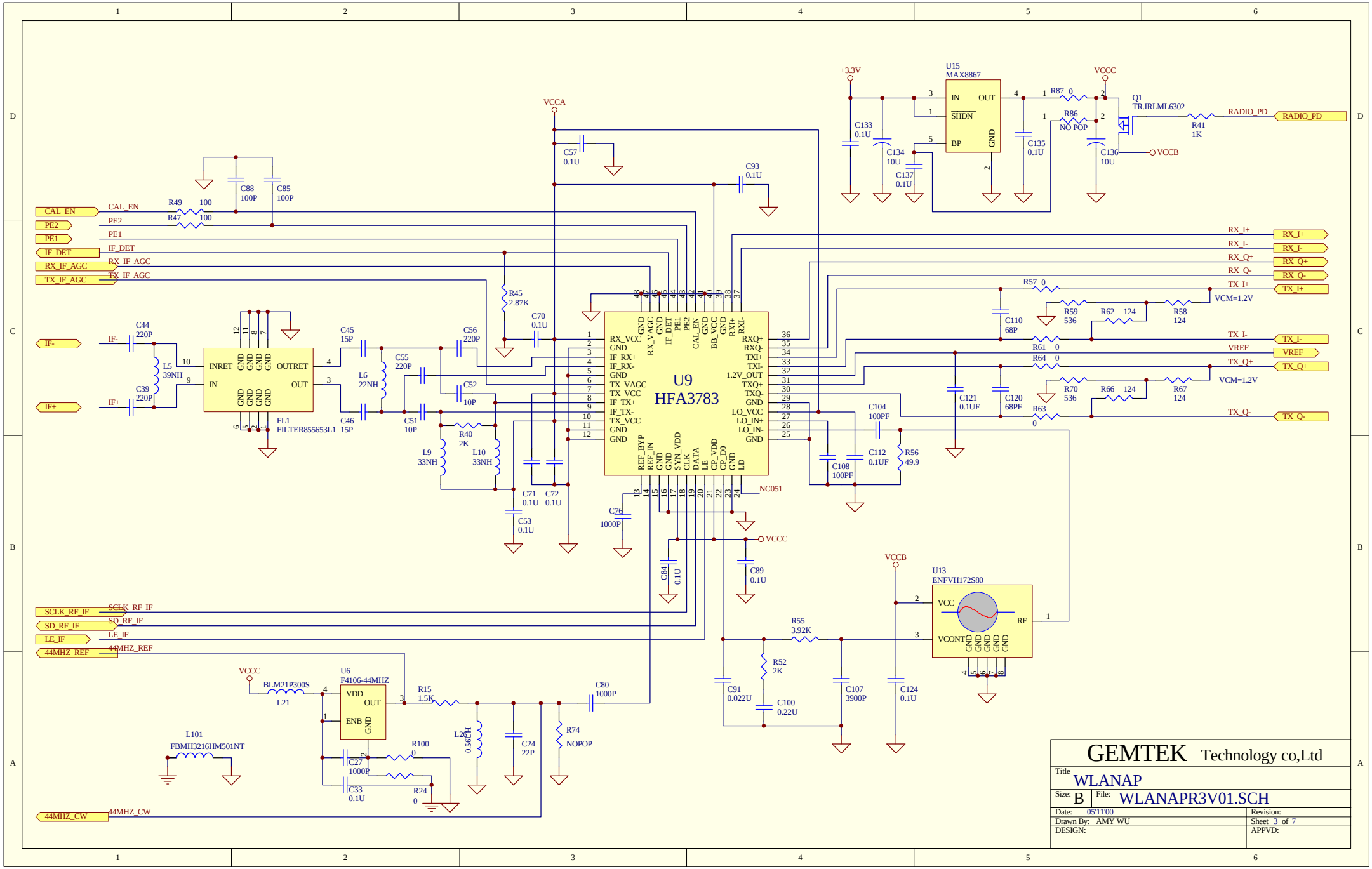
U9
HFA3783
U15
MAX8867
U13
ENFVH172S80
U6
F4106-44MHZ
Q1
TR.IRLML6302
FL1
FILTER855653L1
L101
FBMH3216HM501NT
L21
BLM21P300S
VCCA
VCCC
VCCB
+3.3V
CAL_EN
PE2
PE1
IF_DET
RX_IF_AGC
TX_IF_AGC
IF-
IF+
SCLK_RF_IF
SD_RF_IF
LE_IF
44MHZ_REF
44MHZ_CW
RADIO_PD
RX_I+
RX_I-
RX_Q+
RX_Q-
TX_I+
TX_I-
VREF
TX_Q+
TX_Q-
VCM=1.2V
NC051
GEMTEK Technology co,Ltd
Title
WLANAP
Size: B
File: WLANAPR3V01.SCH
Date: 05'11'00
Revision:
Drawn By: AMY WU
Sheet 3 of 7
DESIGN:
APPVD: