EXHIBIT D

Circuit Diagram

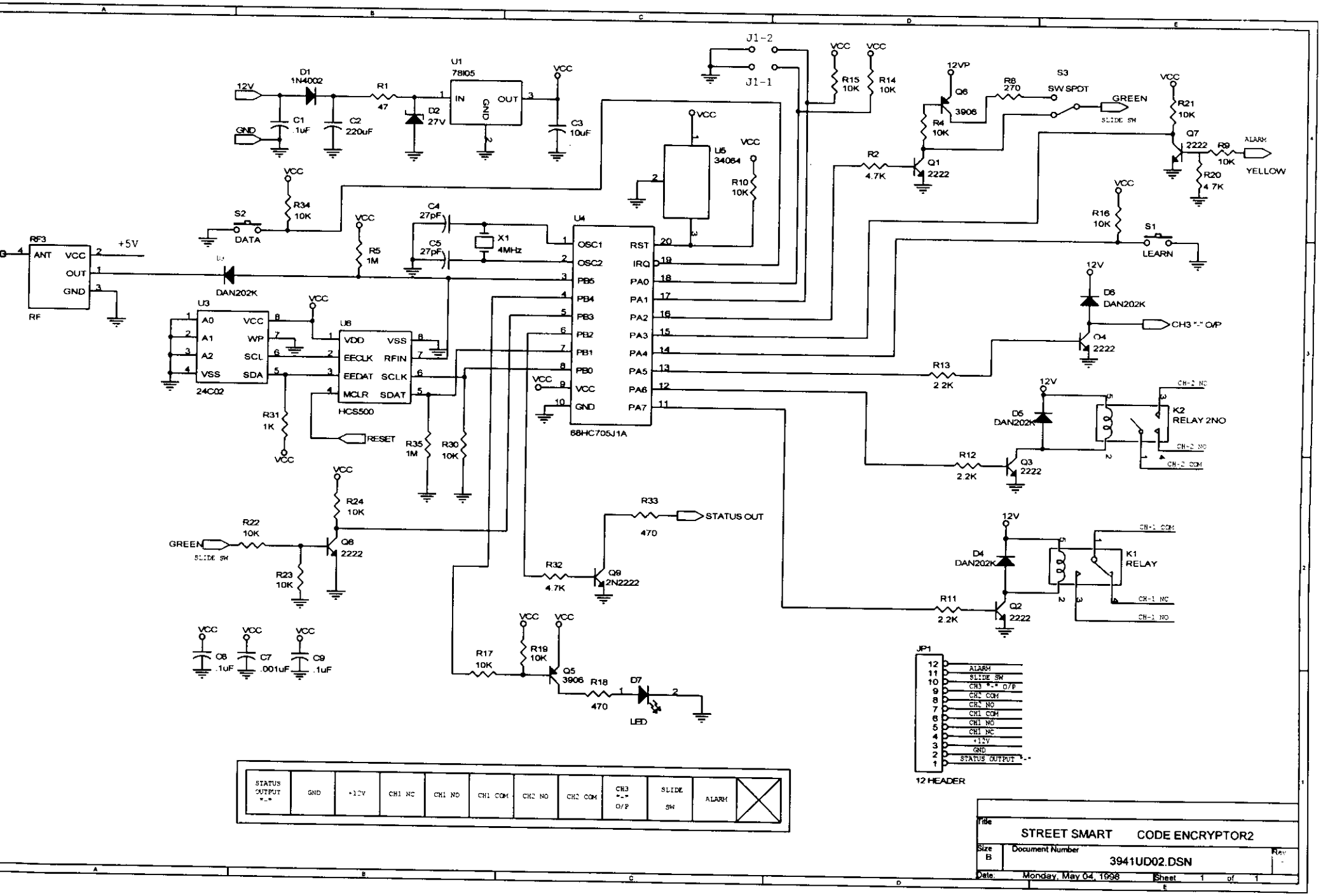
RF3
ANT
VCC
OUT
GND
RF
+5V
DAN202K
S2
DATA
R34
10K
U3
A0
A1
A2
VSS
VCC
WP
SCL
SDA
24C02
U6
VDD
EECLK
EEDAT
MCLR
VSS
RFIN
SCLK
SDAT
HCS500
RESET
R5
1M
R31
1K
R35
1M
R30
10K
C4
27pF
C5
27pF
X1
4MHz
U4
OSC1
OSC2
PB5
PB4
PB3
PB2
PB1
PB0
RST
IRQ
PA0
PA1
PA2
PA3
PA4
PA5
PA6
PA7
68HC705J1A
U1
78I05
IN
OUT
GND
12V
GND
D1
1N4002
R1
47
C1
.1uF
C2
220uF
D2
27V
C3
10uF
U5
34064
R10
10K
J1-2
J1-1
R15
10K
R14
10K
12VP
Q6
3906
R4
10K
R8
270
S3
SW SPDT
GREEN
SLIDE SW
R2
4.7K
Q1
2222
R21
10K
Q7
2222
R9
10K
ALARM
YELLOW
R20
4.7K
R16
10K
S1
LEARN
D6
DAN202K
CH3 "-" O/P
Q4
2222
R13
2.2K
D5
DAN202K
K2
RELAY 2NO
CH-2 NC
CH-2 NO
CH-2 COM
R12
2.2K
Q3
2222
D4
DAN202K
K1
RELAY
CH-1 COM
CH-1 NC
CH-1 NO
R11
2.2K
Q2
2222
R24
10K
R22
10K
GREEN
SLIDE SW
Q8
2222
R23
10K
R33
470
STATUS OUT
R32
4.7K
Q9
2N2222
C8
.1uF
C7
.001uF
C9
.1uF
R17
10K
R19
10K
Q5
3906
R18
470
D7
LED
JP1
12 HEADER
ALARM
SLIDE SW
CH3 "-" O/P
CH2 COM
CH2 NO
CH1 COM
CH1 NO
CH1 NC
+12V
GND
STATUS OUTPUT "-"
STATUS OUTPUT "-"
GND
+12V
CH1 NC
CH1 NO
CH1 COM
CH2 NO
CH2 COM
CH3 "-" O/P
SLIDE SW
ALARM
Title
STREET SMART CODE ENCRYPTOR2
Size B
Document Number
3941UD02.DSN
Rev
Date: Monday, May 04, 1998
Sheet 1 of 1