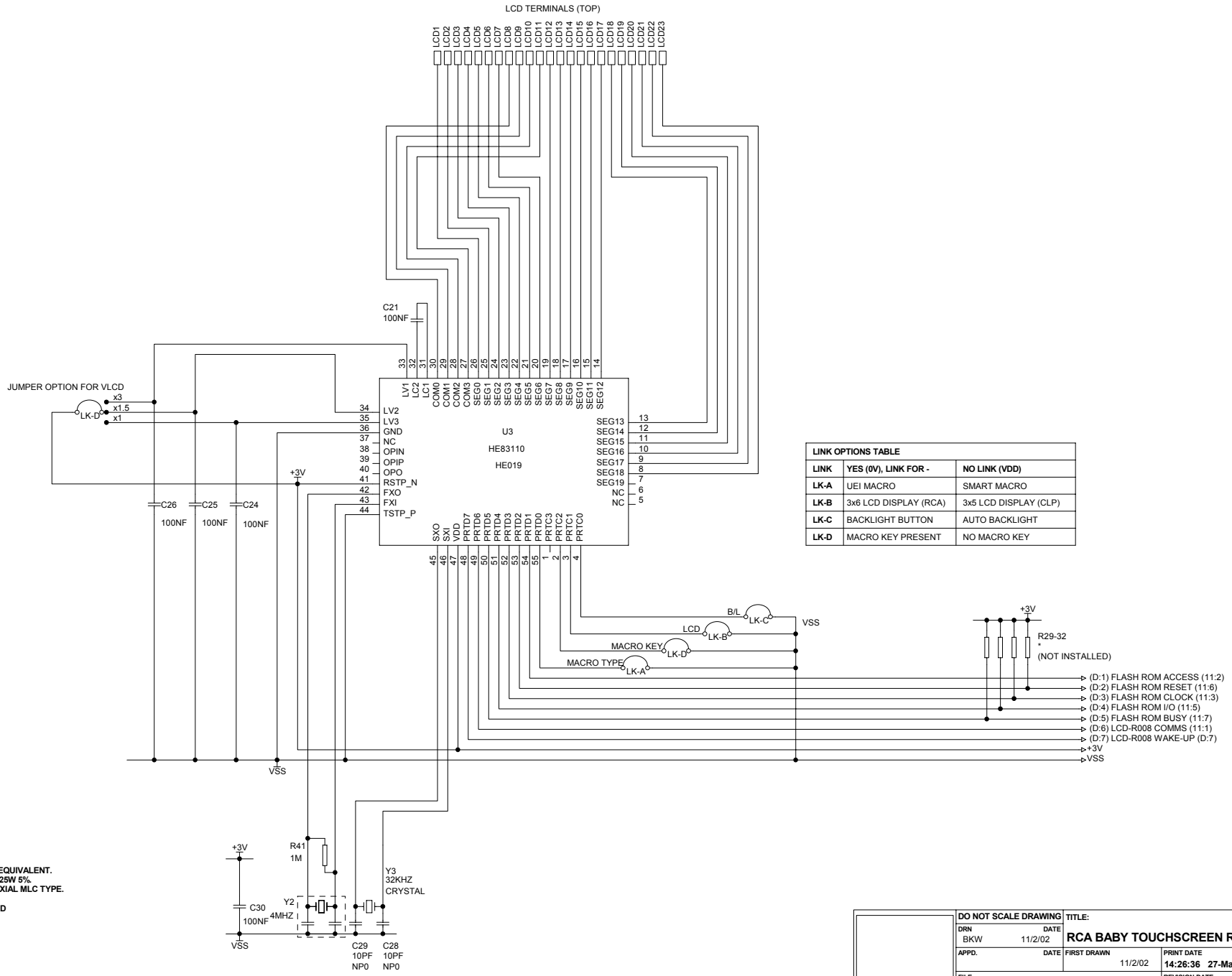

LINK OPTIONS TABLE		
LINK	**YES (0V), LINK FOR -**	**NO LINK (VDD)**
LK-A	UEI MACRO	SMART MACRO
LK-B	3x6 LCD DISPLAY (RCA)	3x5 LCD DISPLAY (CLP)
LK-C	BACKLIGHT BUTTON	AUTO BACKLIGHT
LK-D	MACRO KEY PRESENT	NO MACRO KEY

NOTES:-
1/ ALL UNSPECIFIED DIODES 1N4148 OR EQUIVALENT.
2/ ALL UNSPECIFIED RESISTORS ARE 0.125W 5%.
3/ ALL UNSPECIFIED CAPACITORS ARE AXIAL MLC TYPE.

"*" DENOTES COMPONENT NOT INSTALLED

Error : PICO.WMF File Not Found	DO NOT SCALE DRAWING	TITLE: (Page 2 of 2)	
	DRN BKW DATE 11/2/02	RCA BABY TOUCHSCREEN REMOTE	
	APPD. DATE	FIRST DRAWN 11/2/02	PRINT DATE 14:26:36 27-Mar-2003 / SHEET No. 2 of 2
	FILE H:\JOSEPH\RCU9002A.SCH	REVISION DATE 5/3/02	REV. A

PICO ELECTRONICS Ltd., Eastfield Industrial Estate, Glenrothes, Fife, KY7 4NZ, SCOTLAND

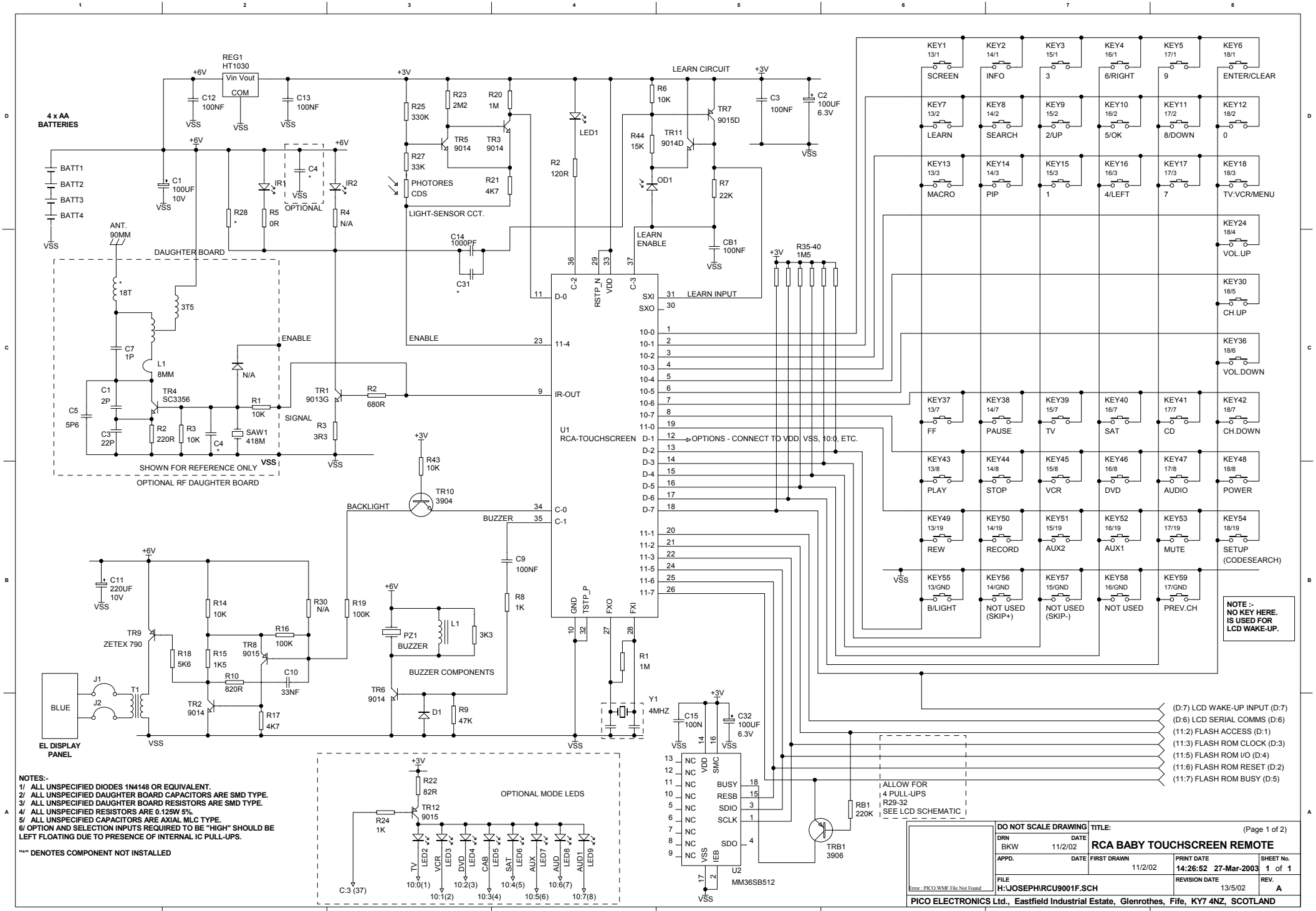

NOTES:-

1/ ALL UNSPECIFIED DIODES 1N4148 OR EQUIVALENT.
2/ ALL UNSPECIFIED DAUGHTER BOARD CAPACITORS ARE SMD TYPE.
3/ ALL UNSPECIFIED DAUGHTER BOARD RESISTORS ARE SMD TYPE.
4/ ALL UNSPECIFIED RESISTORS ARE 0.125W 5%.
5/ ALL UNSPECIFIED CAPACITORS ARE AXIAL MLC TYPE.
6/ OPTION AND SELECTION INPUTS REQUIRED TO BE "HIGH" SHOULD BE LEFT FLOATING DUE TO PRESENCE OF INTERNAL IC PULL-UPS.

"*" DENOTES COMPONENT NOT INSTALLED

DO NOT SCALE DRAWING	TITLE:		(Page 1 of 2)
DRN BKW DATE 11/2/02	RCA BABY TOUCHSCREEN REMOTE		
APPD. DATE	FIRST DRAWN 11/2/02	PRINT DATE 14:26:52 27-Mar-2003	SHEET No. 1 of 1
FILE H:\JOSEPH\RCU9001F.SCH		REVISION DATE 13/5/02	REV. A

Error : PICO.WMF File Not Found

PICO ELECTRONICS Ltd., Eastfield Industrial Estate, Glenrothes, Fife, KY7 4NZ, SCOTLAND