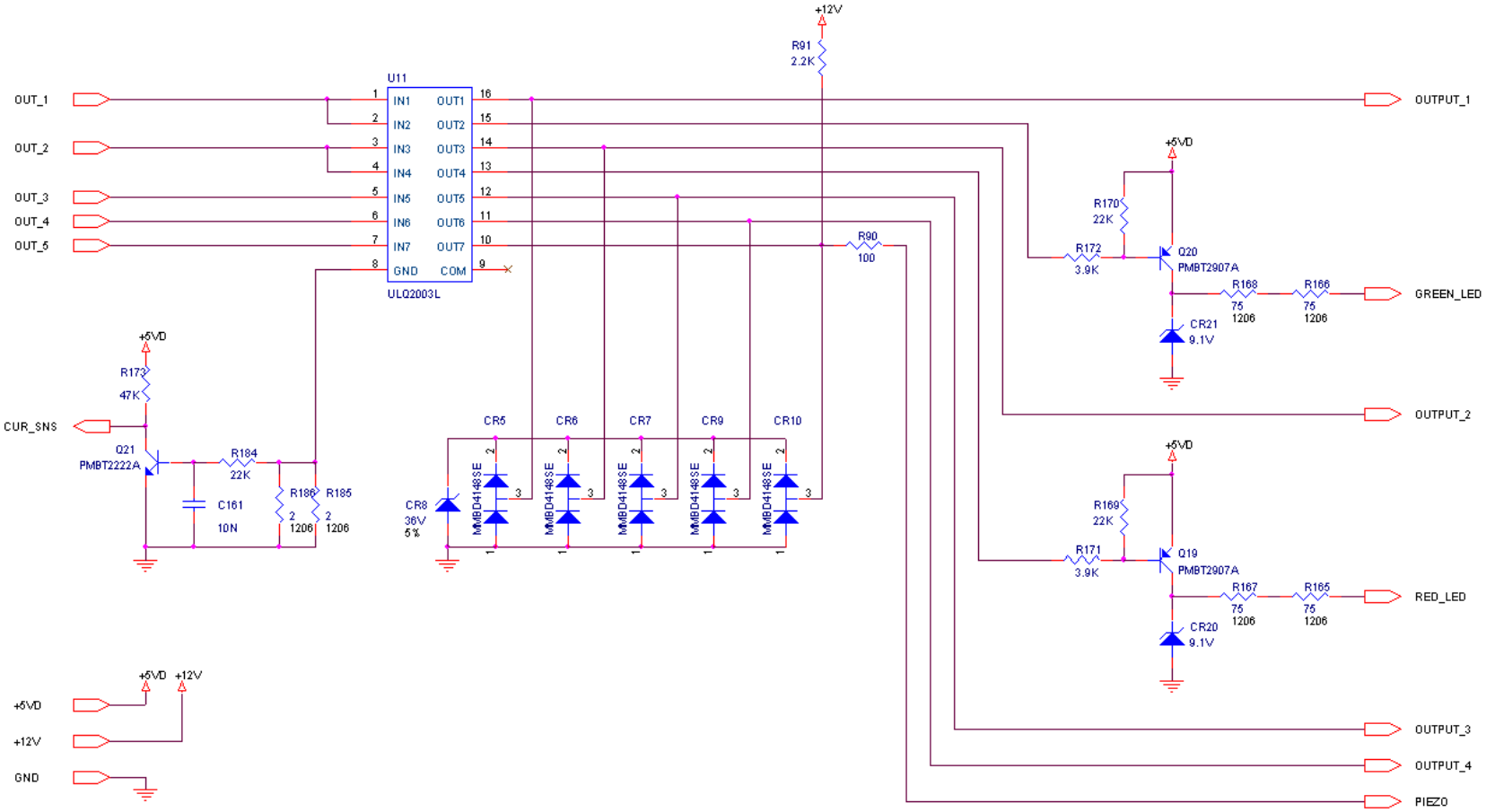

PROPRIETARY INFORMATION
ALL RIGHTS RESERVED, NO PARTS OF THIS DOCUMENT MAY BE REPRODUCED, STORED IN A RETRIEVAL SYSTEM, OR TRANSMITTED, IN ANY FORM OR BY ANY MEANS, ELECTRONIC, MECHANICAL PHOTOCOPYING, RECORDING OR OTHERWISE, WITHOUT THE PRIOR WRITTEN PERMISSION OF TADIRAN TELEMATICS LTD, NOR USED IN WHOLE OR IN PART FOR ANY PURPOSE OR FOR ANY CUSTOMER EXCEPT TADIRAN TELEMATICS.

Title	TULIP-US/OUTPUT	
Size B	Document Number 2135-95174-00	Rev B
Date: Thursday, January 27, 2000	Sheet 7 of 13	

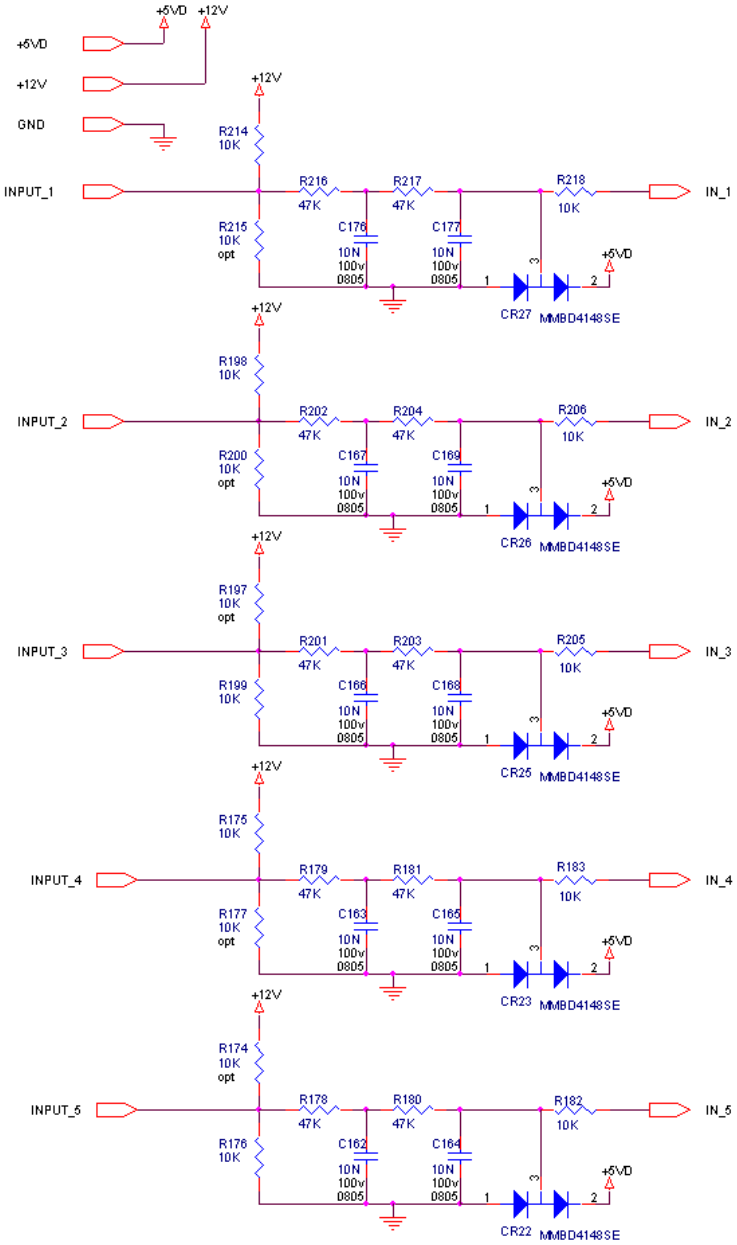

PROPRIETARY INFORMATION
ALL RIGHTS RESERVED, NO PARTS OF THIS DOCUMENT MAY BE REPRODUCED, STORED IN A RETRIEVAL SYSTEM, OR TRANSMITTED, IN ANY FORM OR BY ANY MEANS, ELECTRONIC, MECHANICAL PHOTOCOPYING, RECORDING OR OTHERWISE, WITHOUT THE PRIOR WRITTEN PERMISSION OF TADIRAN TELEMATICS LTD, NOR USED IN WHOLE OR IN PART FOR ANY PURPOSE OR FOR ANY CUSTOMER EXCEPT TADIRAN TELEMATICS.

Title	TULIP-US/INPUT	
Size B	Document Number 2135-95174-00	Rev B
Date: Thursday, January 27, 2000	Sheet 6 of 13	

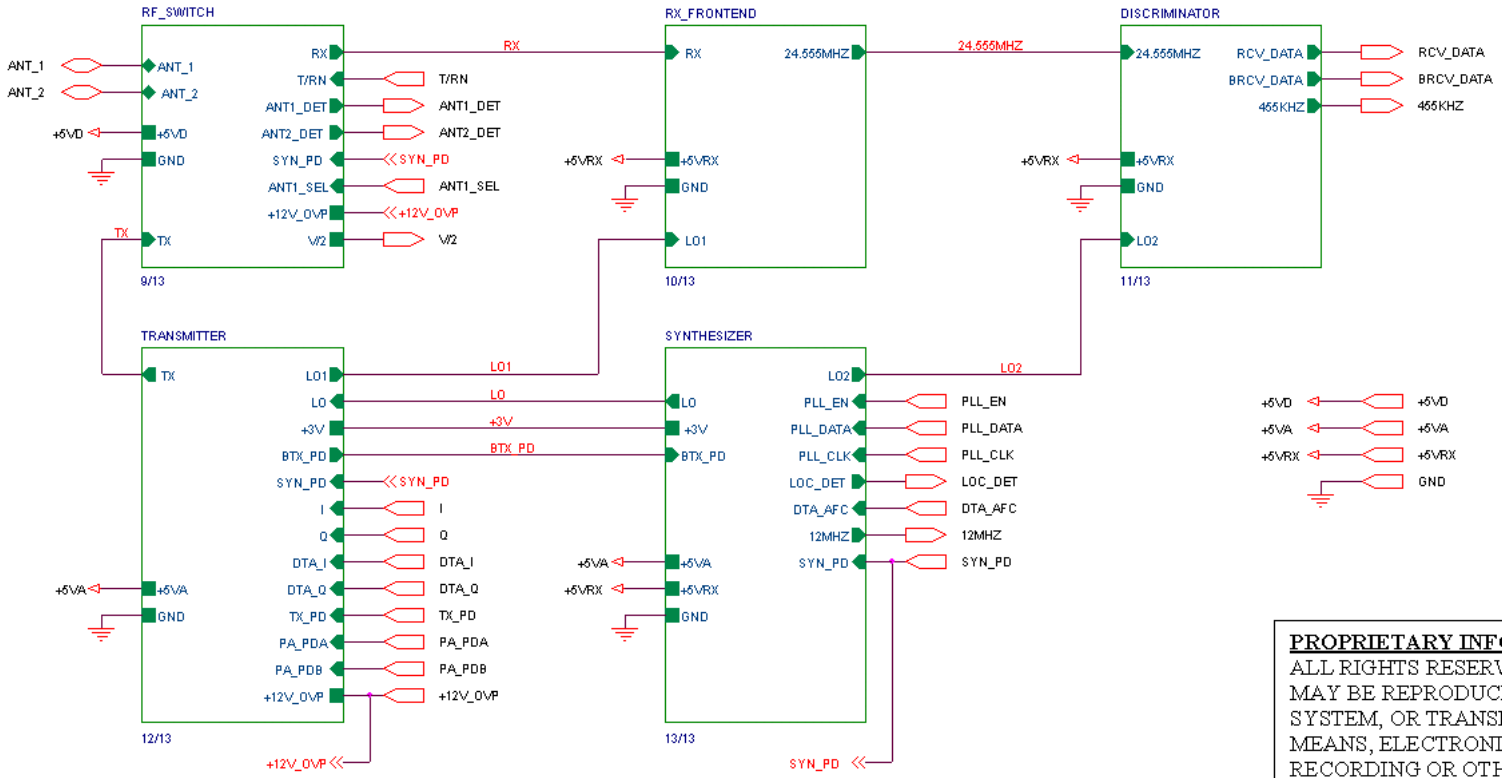

PROPRIETARY INFORMATION
ALL RIGHTS RESERVED, NO PARTS OF THIS DOCUMENT MAY BE REPRODUCED, STORED IN A RETRIEVAL SYSTEM, OR TRANSMITTED, IN ANY FORM OR BY ANY MEANS, ELECTRONIC, MECHANICAL PHOTOCOPYING, RECORDING OR OTHERWISE, WITHOUT THE PRIOR WRITTEN PERMISSION OF TADIRAN TELEMATICS LTD, NOR USED IN WHOLE OR IN PART FOR ANY PURPOSE OR FOR ANY CUSTOMER EXCEPT TADIRAN TELEMATICS.

Title	TULIP-US/RF	
Size B	Document Number 2135-95174-00	Rev B
Date: Thursday, February 03, 2000	Sheet 9 of 13	

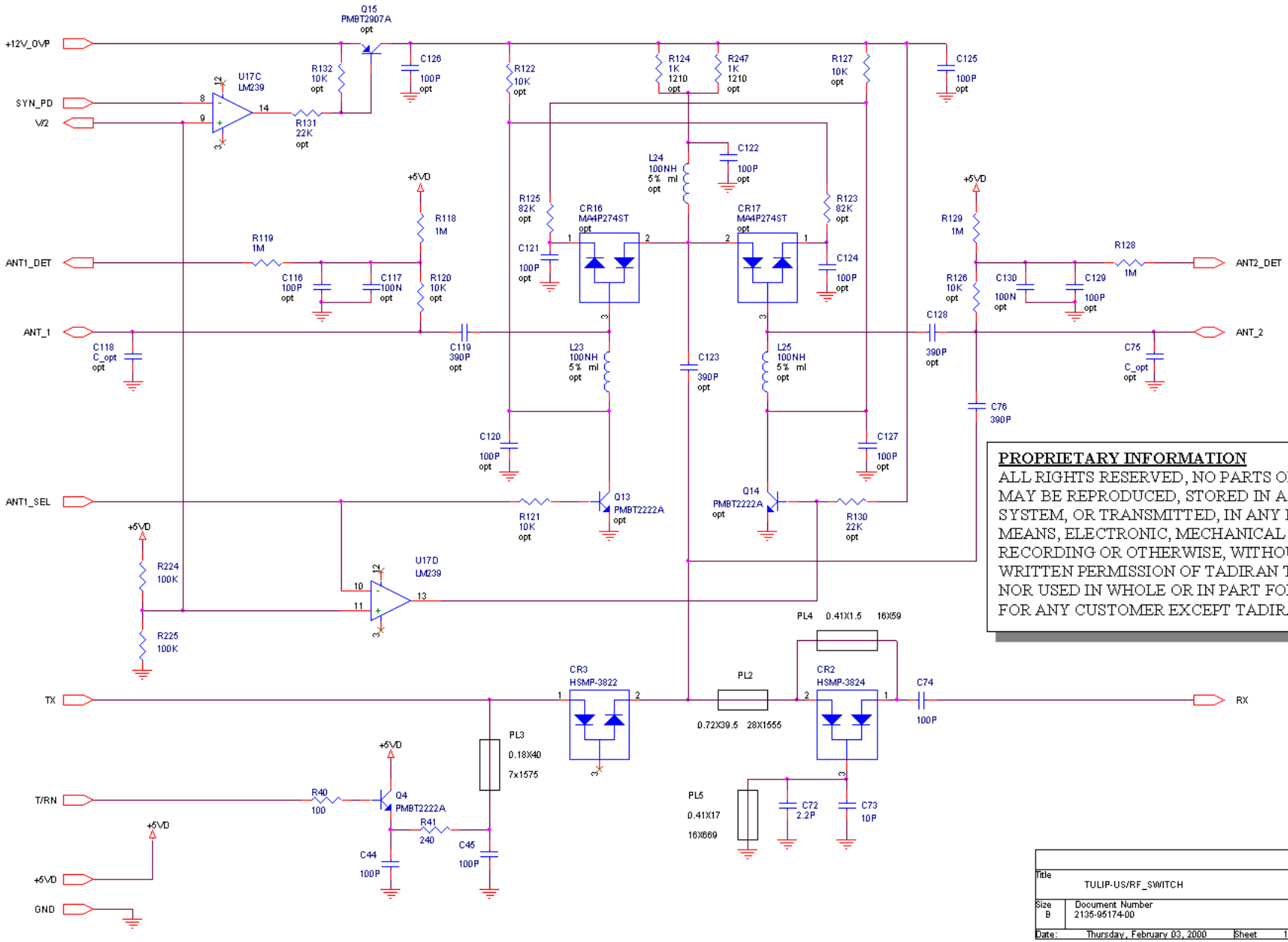

PROPRIETARY INFORMATION

ALL RIGHTS RESERVED, NO PARTS OF THIS DOCUMENT MAY BE REPRODUCED, STORED IN A RETRIEVAL SYSTEM, OR TRANSMITTED, IN ANY FORM OR BY ANY MEANS, ELECTRONIC, MECHANICAL PHOTOCOPYING, RECORDING OR OTHERWISE, WITHOUT THE PRIOR WRITTEN PERMISSION OF TADIRAN TELEMATICS LTD, NOR USED IN WHOLE OR IN PART FOR ANY PURPOSE OR FOR ANY CUSTOMER EXCEPT TADIRAN TELEMATICS.

Title	TULIP-US/RF_SWITCH	
Size B	Document Number 2135-95174-00	Rev B
Date: Thursday, February 03, 2000	Sheet 10 of 13	

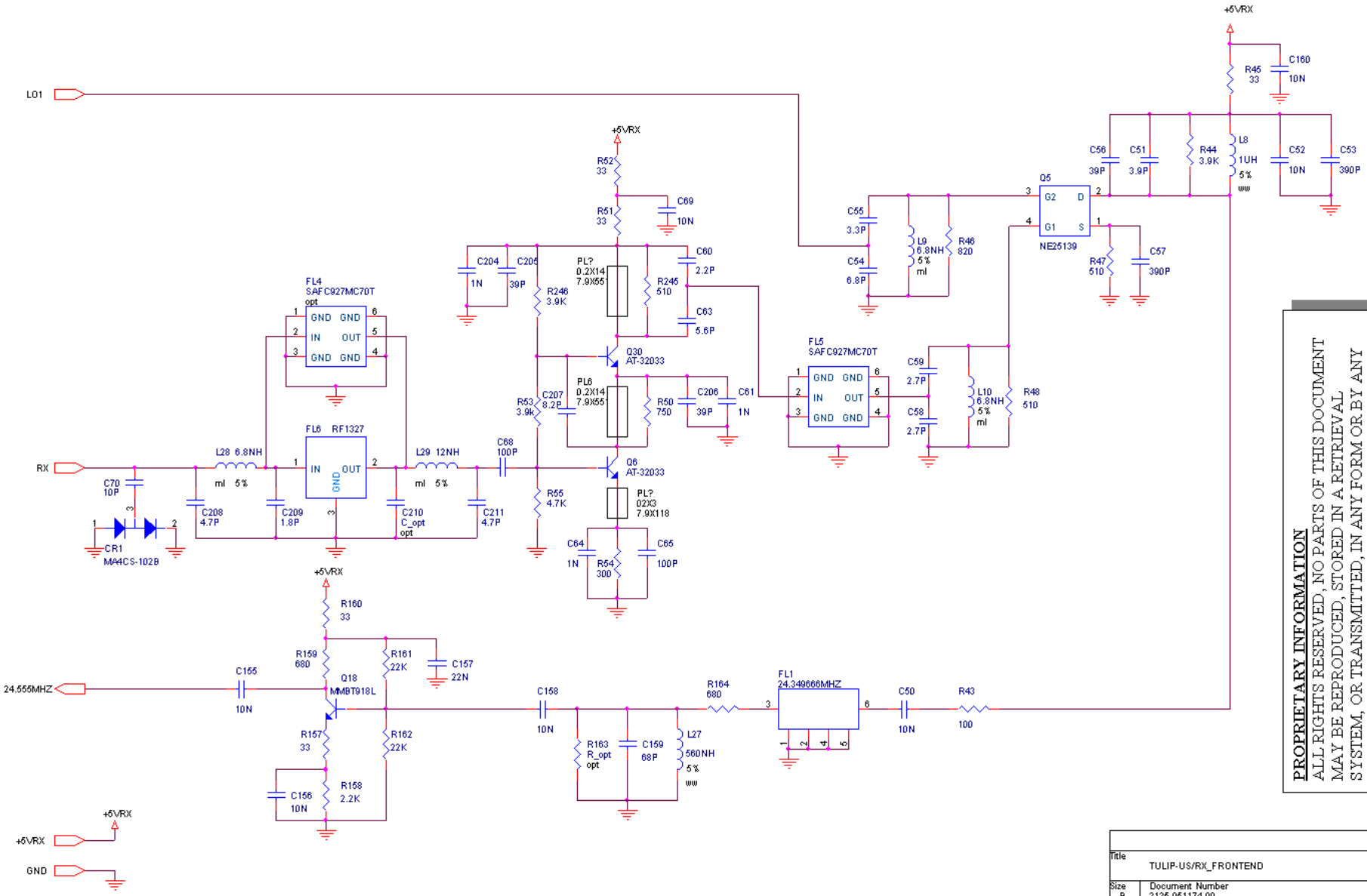

PROPRIETARY INFORMATION
ALL RIGHTS RESERVED, NO PARTS OF THIS DOCUMENT MAY BE REPRODUCED, STORED IN A RETRIEVAL SYSTEM, OR TRANSMITTED, IN ANY FORM OR BY ANY MEANS, ELECTRONIC, MECHANICAL PHOTOCOPYING, RECORDING OR OTHERWISE, WITHOUT THE PRIOR WRITTEN PERMISSION OF TADIRAN TELEMATICS LTD, NOR USED IN WHOLE OR IN PART FOR ANY PURPOSE OR FOR ANY CUSTOMER EXCEPT TADIRAN TELEMATICS.

Title	TULIP-US/RX_FRONTEND		
Size B	Document Number 2135-951174-00		Rev B
Date: Thursday, February 03, 2000	Sheet 11 of 13		

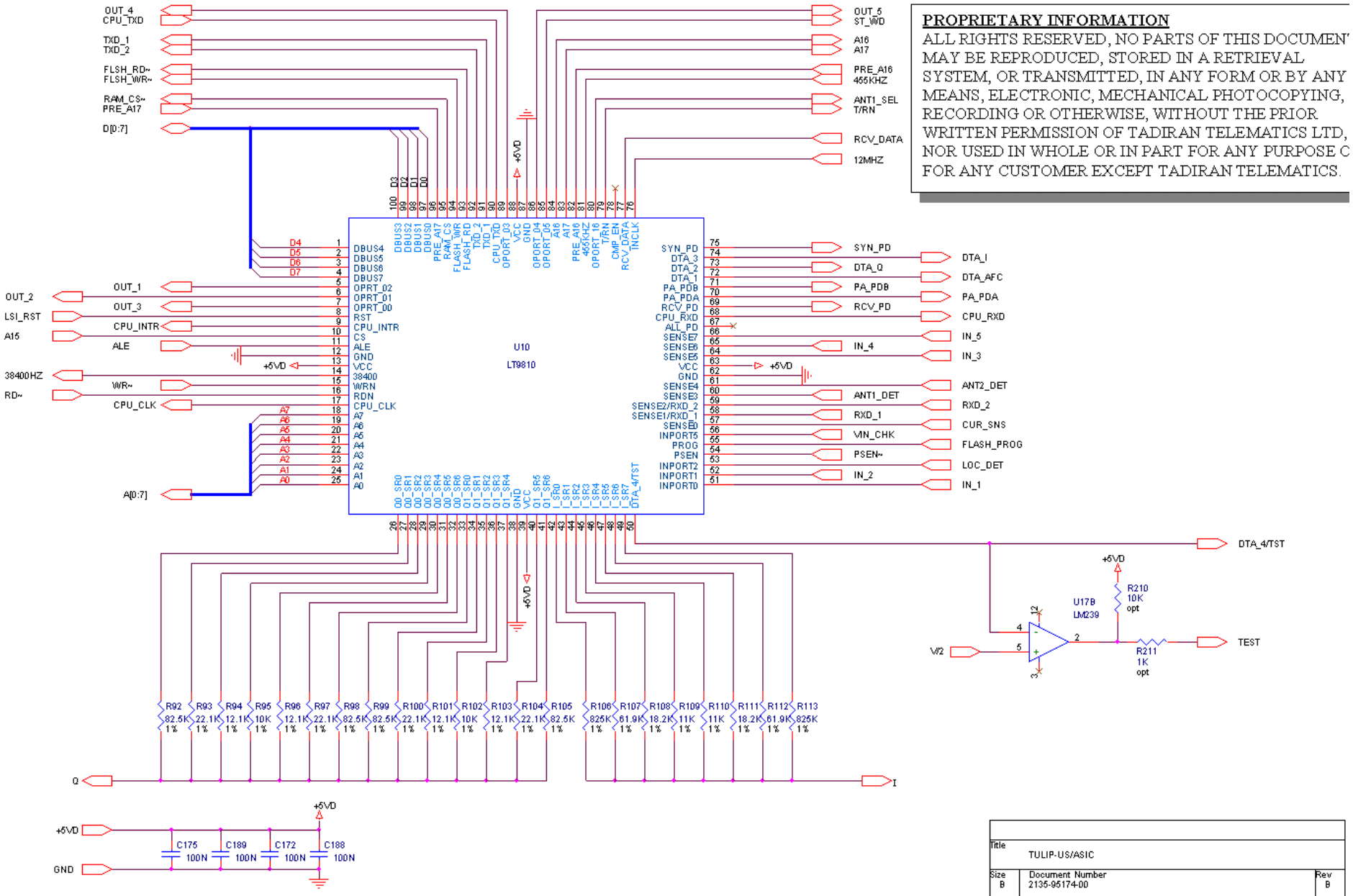

PROPRIETARY INFORMATION

ALL RIGHTS RESERVED, NO PARTS OF THIS DOCUMEN' MAY BE REPRODUCED, STORED IN A RETRIEVAL SYSTEM, OR TRANSMITTED, IN ANY FORM OR BY ANY MEANS, ELECTRONIC, MECHANICAL PHOTOCOPYING, RECORDING OR OTHERWISE, WITHOUT THE PRIOR WRITTEN PERMISSION OF TADIRAN TELEMATICS LTD, NOR USED IN WHOLE OR IN PART FOR ANY PURPOSE C FOR ANY CUSTOMER EXCEPT TADIRAN TELEMATICS.

Title	TULIP-US/ASIC	
Size B	Document Number 2135-95174-00	Rev B
Date: Thursday, February 03, 2000	Sheet 2 of 13	

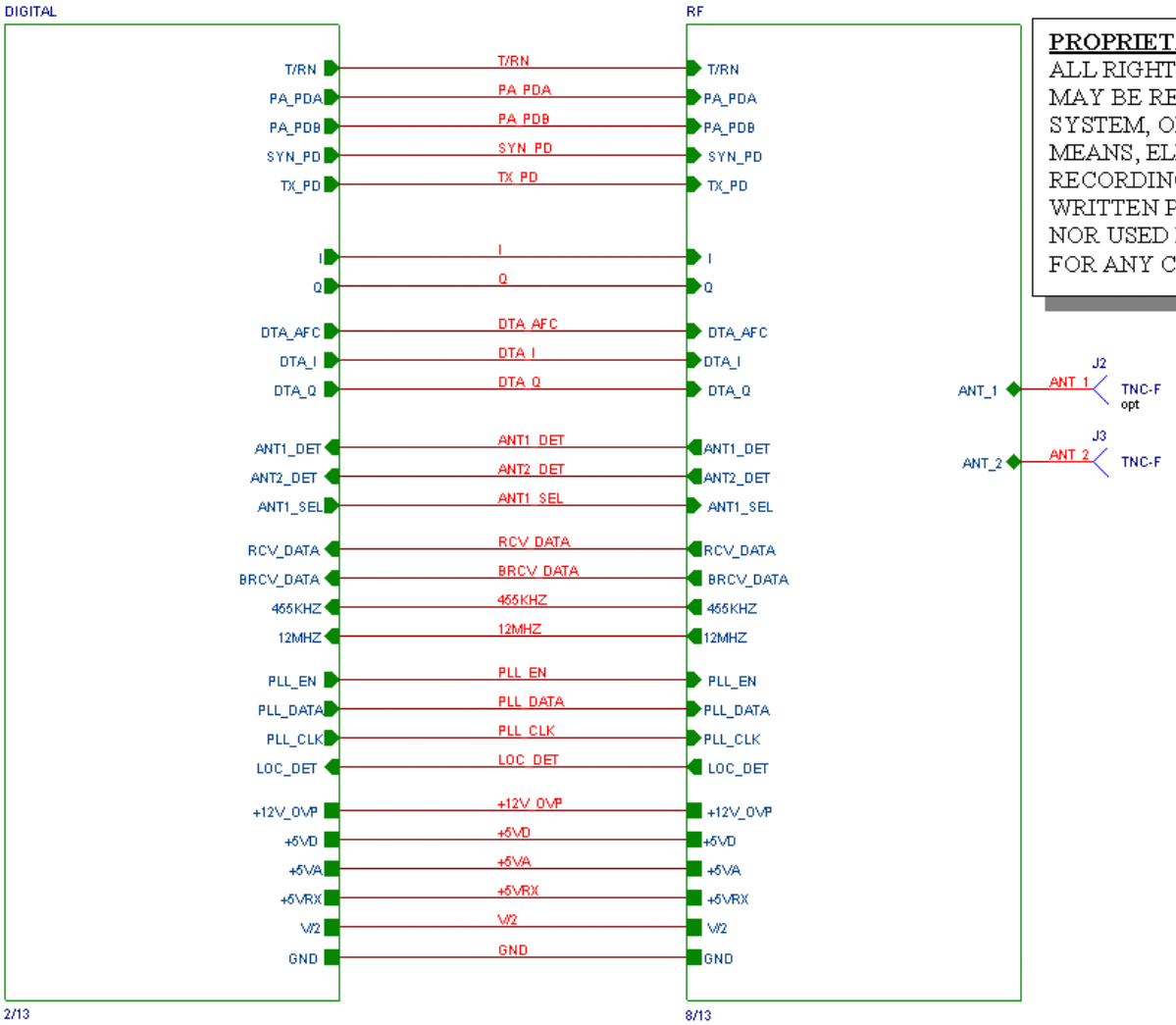

PROPRIETARY INFORMATION
ALL RIGHTS RESERVED, NO PARTS OF THIS DOCUMENT MAY BE REPRODUCED, STORED IN A RETRIEVAL SYSTEM, OR TRANSMITTED, IN ANY FORM OR BY ANY MEANS, ELECTRONIC, MECHANICAL PHOTOCOPYING, RECORDING OR OTHERWISE, WITHOUT THE PRIOR WRITTEN PERMISSION OF TADIRAN TELEMATICS LTD, NOR USED IN WHOLE OR IN PART FOR ANY PURPOSE OR FOR ANY CUSTOMER EXCEPT TADIRAN TELEMATICS.

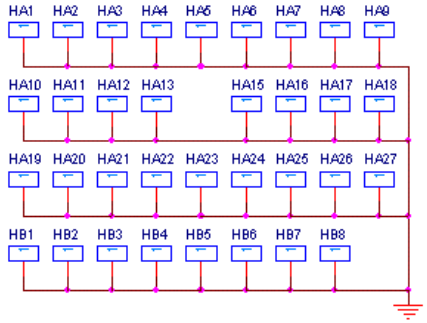

Title	TULIP-US/BLOCK	
Size B	Document Number 2135-95174-00	Rev B
Date: Thursday, January 27, 2000	Sheet 1 of 13	

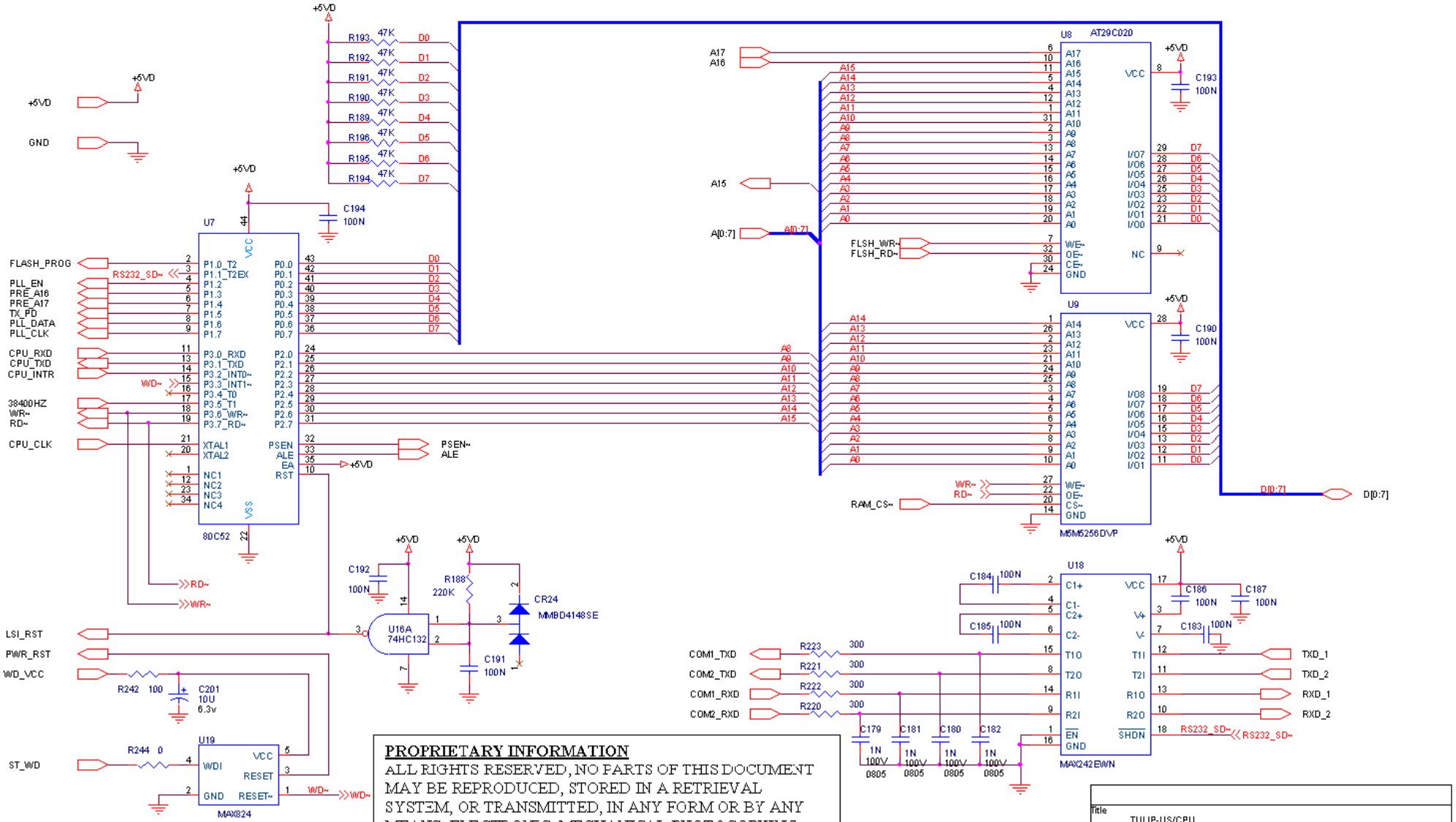

PROPRIETARY INFORMATION

ALL RIGHTS RESERVED, NO PARTS OF THIS DOCUMENT MAY BE REPRODUCED, STORED IN A RETRIEVAL SYSTEM, OR TRANSMITTED, IN ANY FORM OR BY ANY MEANS, ELECTRONIC, MECHANICAL PHOTOCOPYING, RECORDING OR OTHERWISE, WITHOUT THE PRIOR WRITTEN PERMISSION OF TADIRAN TELEMATICS LTD, NOR USED IN WHOLE OR IN PART FOR ANY PURPOSE OR FOR ANY CUSTOMER EXCEPT TADIRAN TELEMATICS.

Title	TULIP-US/CPU	
Size B	Document Number 2135-95174-00	Rev B
Date: Thursday, February 03, 2000	Sheet 3 of 13	

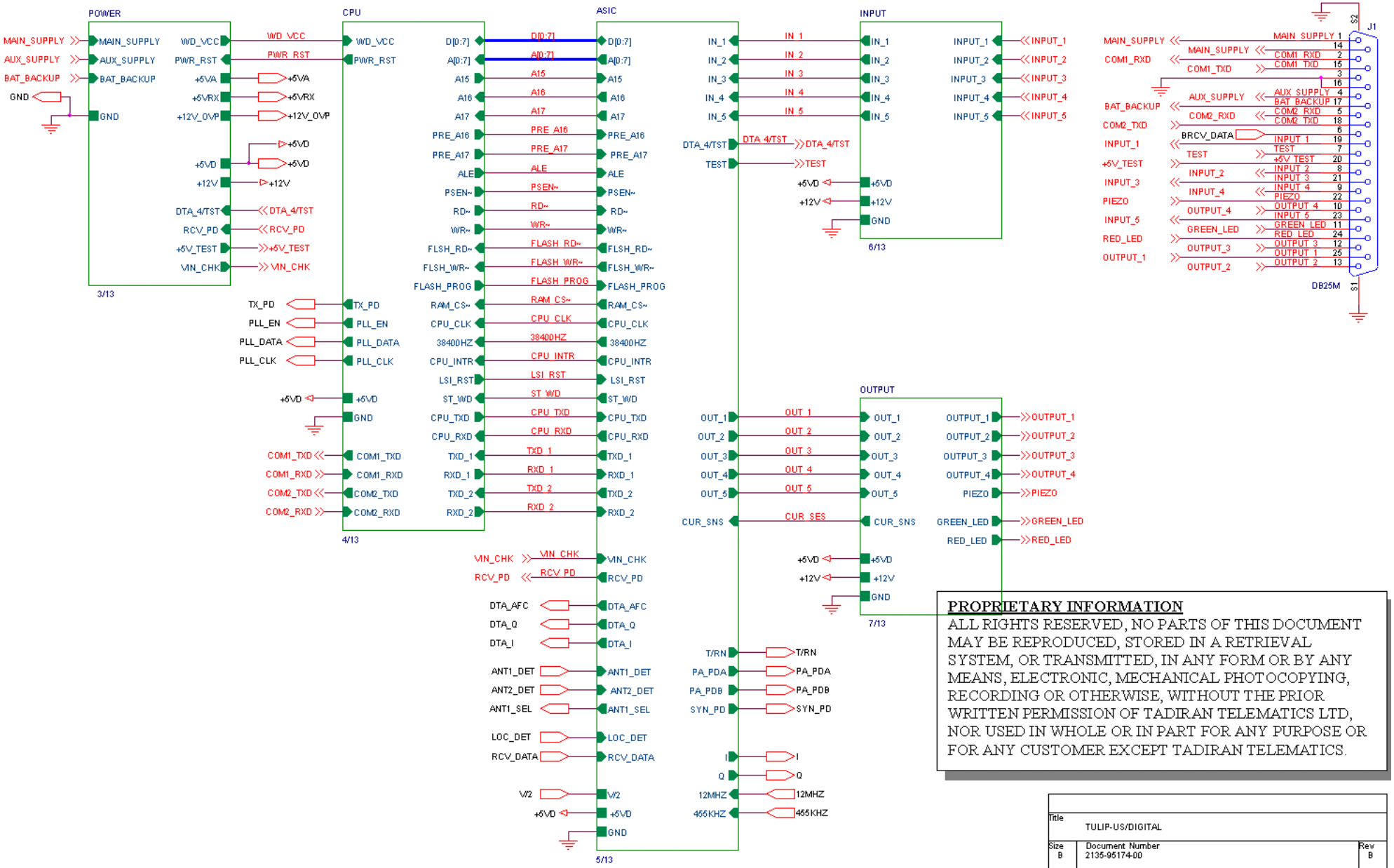

PROPRIETARY INFORMATION

ALL RIGHTS RESERVED, NO PARTS OF THIS DOCUMENT MAY BE REPRODUCED, STORED IN A RETRIEVAL SYSTEM, OR TRANSMITTED, IN ANY FORM OR BY ANY MEANS, ELECTRONIC, MECHANICAL PHOTOCOPYING, RECORDING OR OTHERWISE, WITHOUT THE PRIOR WRITTEN PERMISSION OF TADIRAN TELEMATICS LTD, NOR USED IN WHOLE OR IN PART FOR ANY PURPOSE OR FOR ANY CUSTOMER EXCEPT TADIRAN TELEMATICS.

Title	TULIP-US/DIGITAL	
Size B	Document Number 2135-95174-00	Rev B
Date: Thursday, February 03, 2000	Sheet 4 of 13	

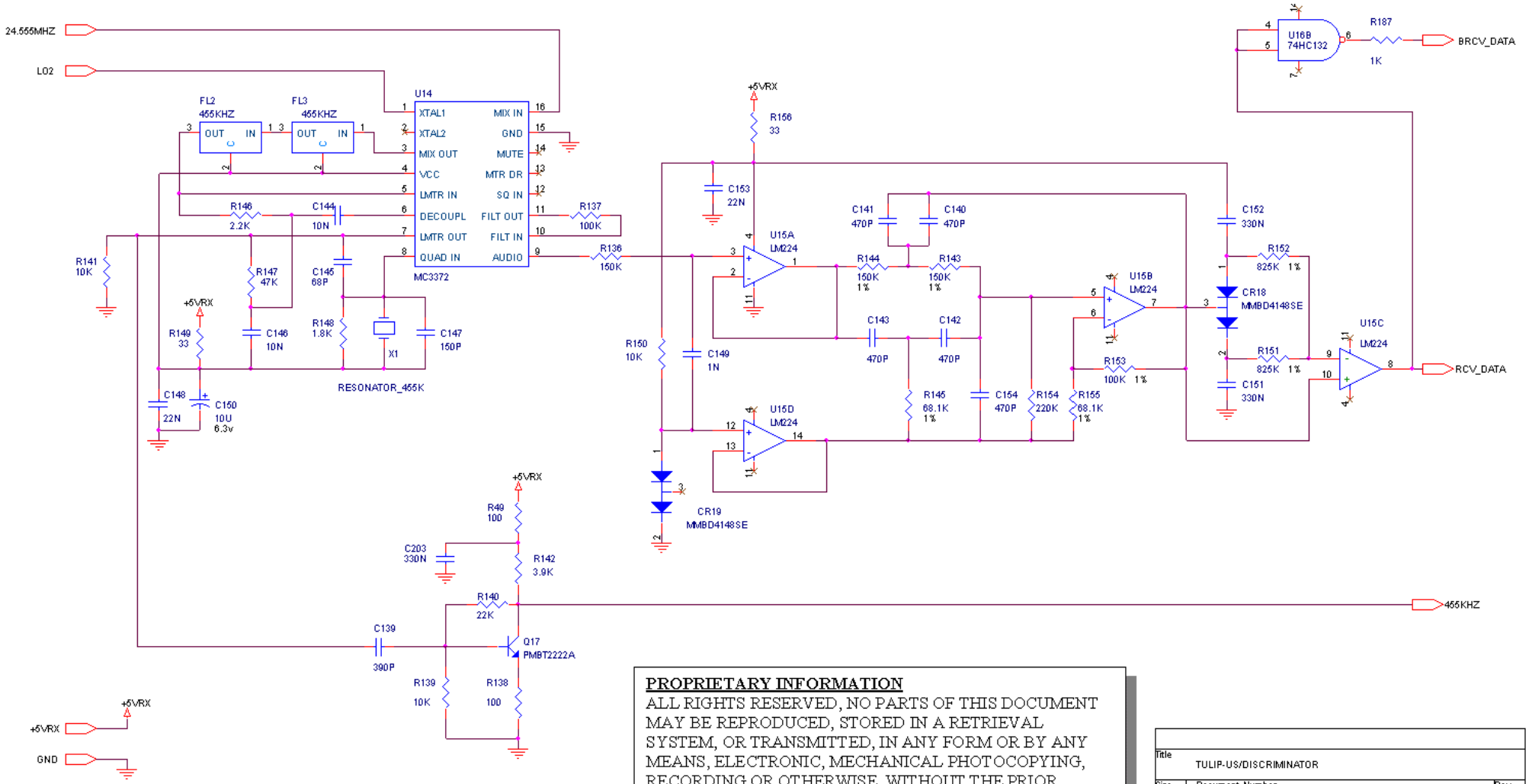

PROPRIETARY INFORMATION

ALL RIGHTS RESERVED, NO PARTS OF THIS DOCUMENT MAY BE REPRODUCED, STORED IN A RETRIEVAL SYSTEM, OR TRANSMITTED, IN ANY FORM OR BY ANY MEANS, ELECTRONIC, MECHANICAL PHOTOCOPYING, RECORDING OR OTHERWISE, WITHOUT THE PRIOR WRITTEN PERMISSION OF TADIRAN TELEMATICS LTD, NOR USED IN WHOLE OR IN PART FOR ANY PURPOSE OR FOR ANY CUSTOMER EXCEPT TADIRAN TELEMATICS.

Title	TULIP-US/DISCRIMINATOR	
Size B	Document Number 2135-95174-00	Rev B
Date: Thursday, February 03, 2000	Sheet 5 of 13	

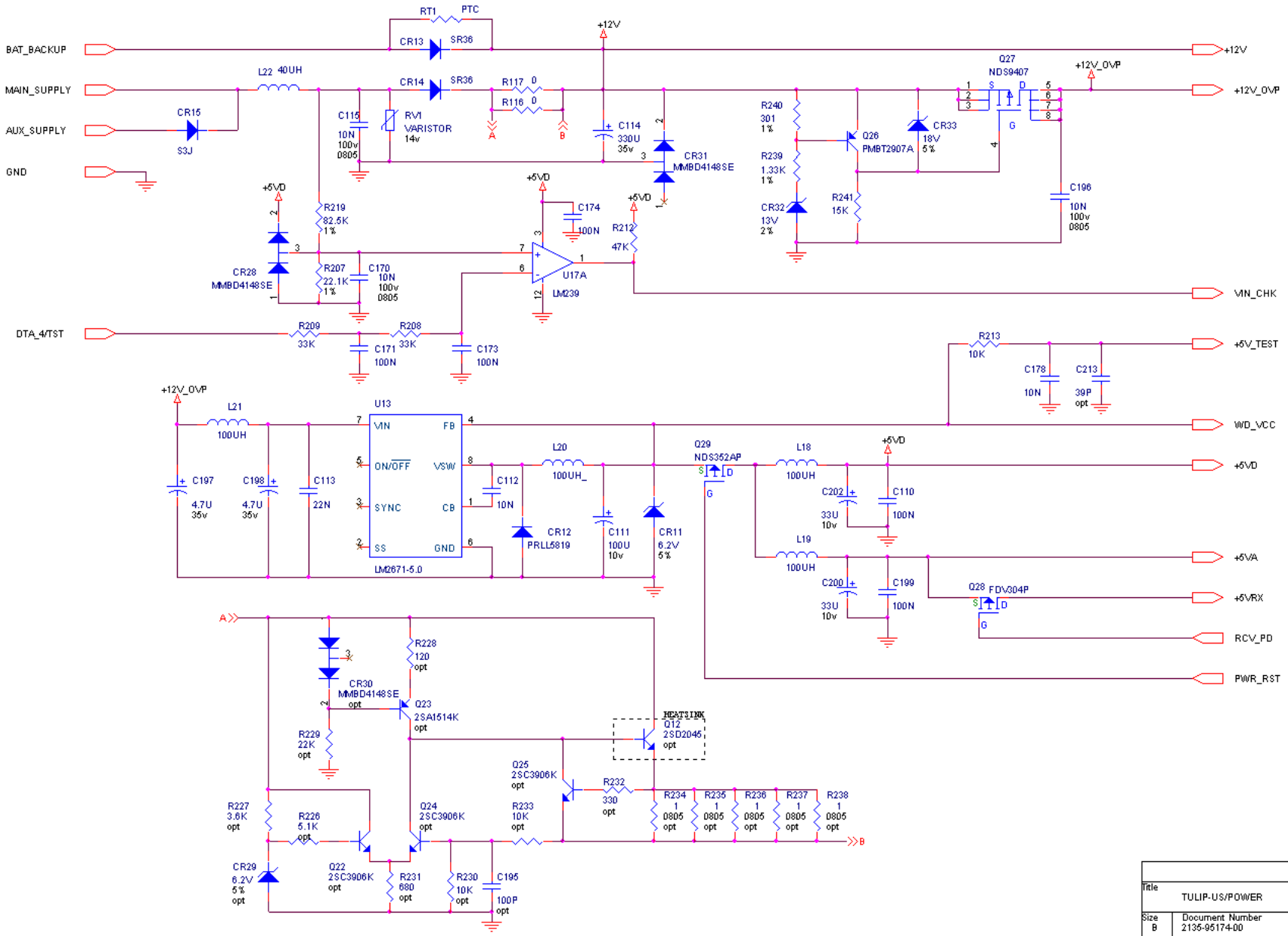

PROPRIETARY INFORMATION
ALL RIGHTS RESERVED, NO PARTS OF THIS DOCUMENT MAY BE REPRODUCED, STORED IN A RETRIEVAL SYSTEM, OR TRANSMITTED, IN ANY FORM OR BY ANY MEANS, ELECTRONIC, MECHANICAL, PHOTOCOPYING, RECORDING OR OTHERWISE, WITHOUT THE PRIOR WRITTEN PERMISSION OF TADIRAN TELEMATICS LTD, NOR USED IN WHOLE OR IN PART FOR ANY PURPOSE OR FOR ANY CUSTOMER EXCEPT TADIRAN TELEMATICS.

FOR 24V:R7=11K,1%,R8V1= R1=N.C

Title	TULIP-US/POWER	
Size B	Document Number 2135-95174-00	Rev B
Date: Thursday, February 03, 2000	Sheet 8 of 13	

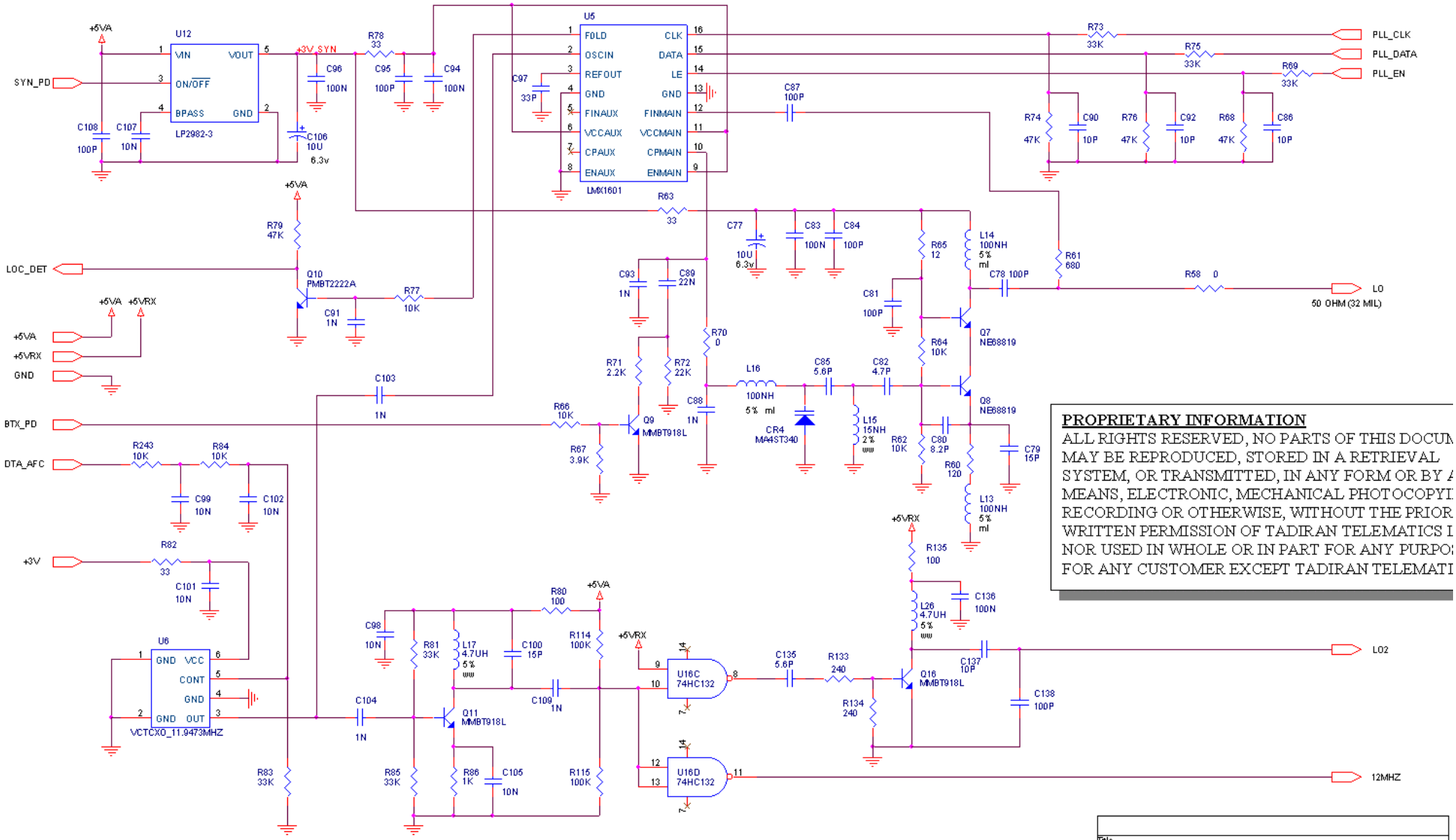

PROPRIETARY INFORMATION
ALL RIGHTS RESERVED, NO PARTS OF THIS DOCUM
MAY BE REPRODUCED, STORED IN A RETRIEVAL
SYSTEM, OR TRANSMITTED, IN ANY FORM OR BY A
MEANS, ELECTRONIC, MECHANICAL PHOTOCOPYI
RECORDING OR OTHERWISE, WITHOUT THE PRIOR
WRITTEN PERMISSION OF TADIRAN TELEMATICS I
NOR USED IN WHOLE OR IN PART FOR ANY PURPO
FOR ANY CUSTOMER EXCEPT TADIRAN TELEMATI

Title	TULIP-US/SYNTHESIZER	
Size B	Document Number 2135-95174-00	Rev B
Date: Thursday, February 03, 2000	Sheet 12 of 13	

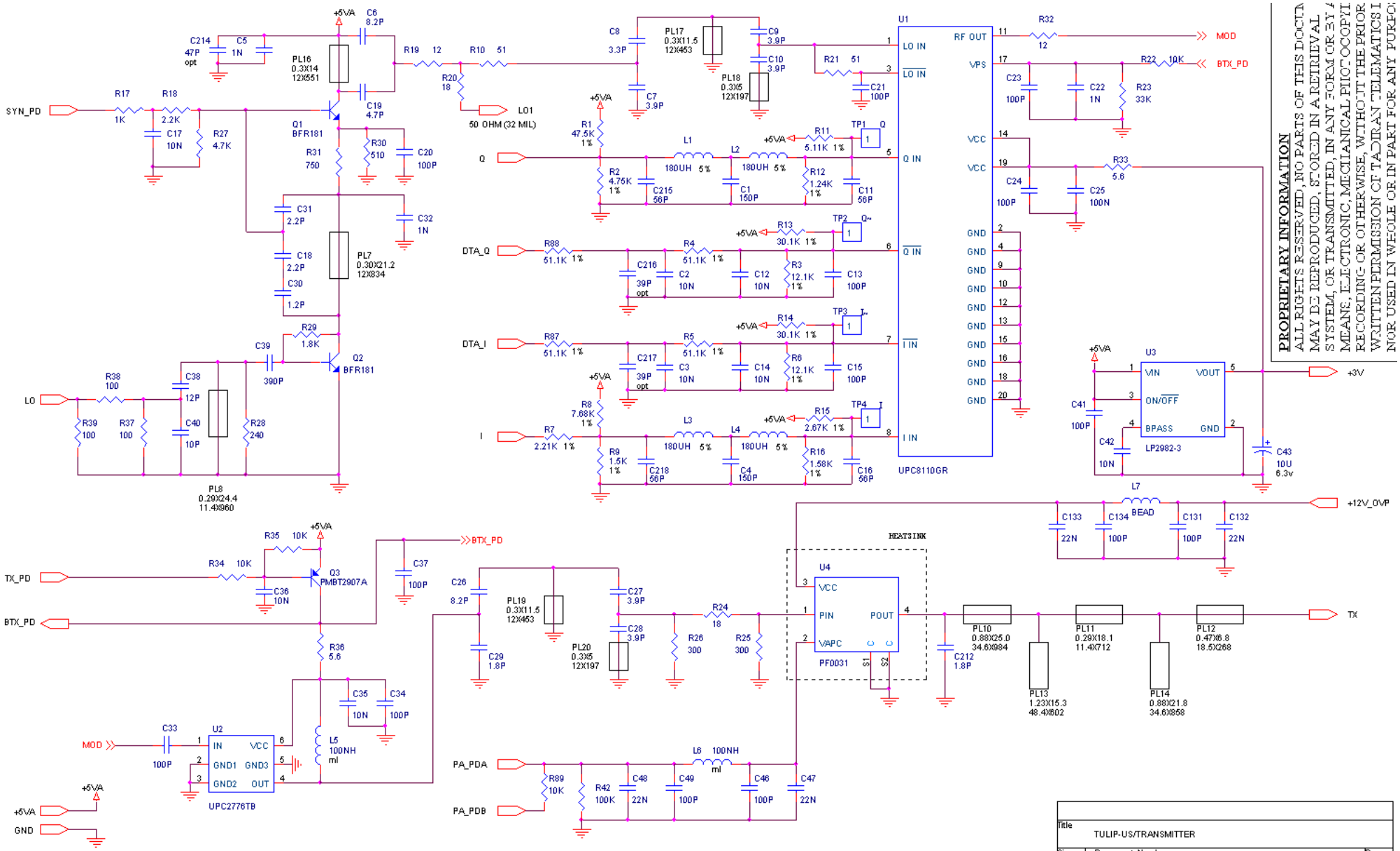

PROPRIETARY INFORMATION
ALL RIGHTS RESERVED, NO PARTS OF THIS DOCUMENT
MAY BE REPRODUCED, STORED IN A RETRIEVAL
SYSTEM, OR TRANSMITTED, IN ANY FORM OR BY ANY
MEANS, ELECTRONIC, MECHANICAL PHOTOCOPYING
RECORDING OR OTHERWISE, WITHOUT THE PRIOR
WRITTEN PERMISSION OF TADIRAN TELEMATICS INC
NOR USED IN WHOLE OR IN PART FOR ANY PURPOSE

Title	TULIP-US/TRANSMITTER	
Size B	Document Number 2135-95174-00	Rev B
Date: Tuesday, February 08, 2000	Sheet 13 of 13	