REV	DETAIL OF CHANGE	DATE	RELASED BY	AGREED BY
02	Switch 1P2T change 2P3T no short	04/03	ALONG	

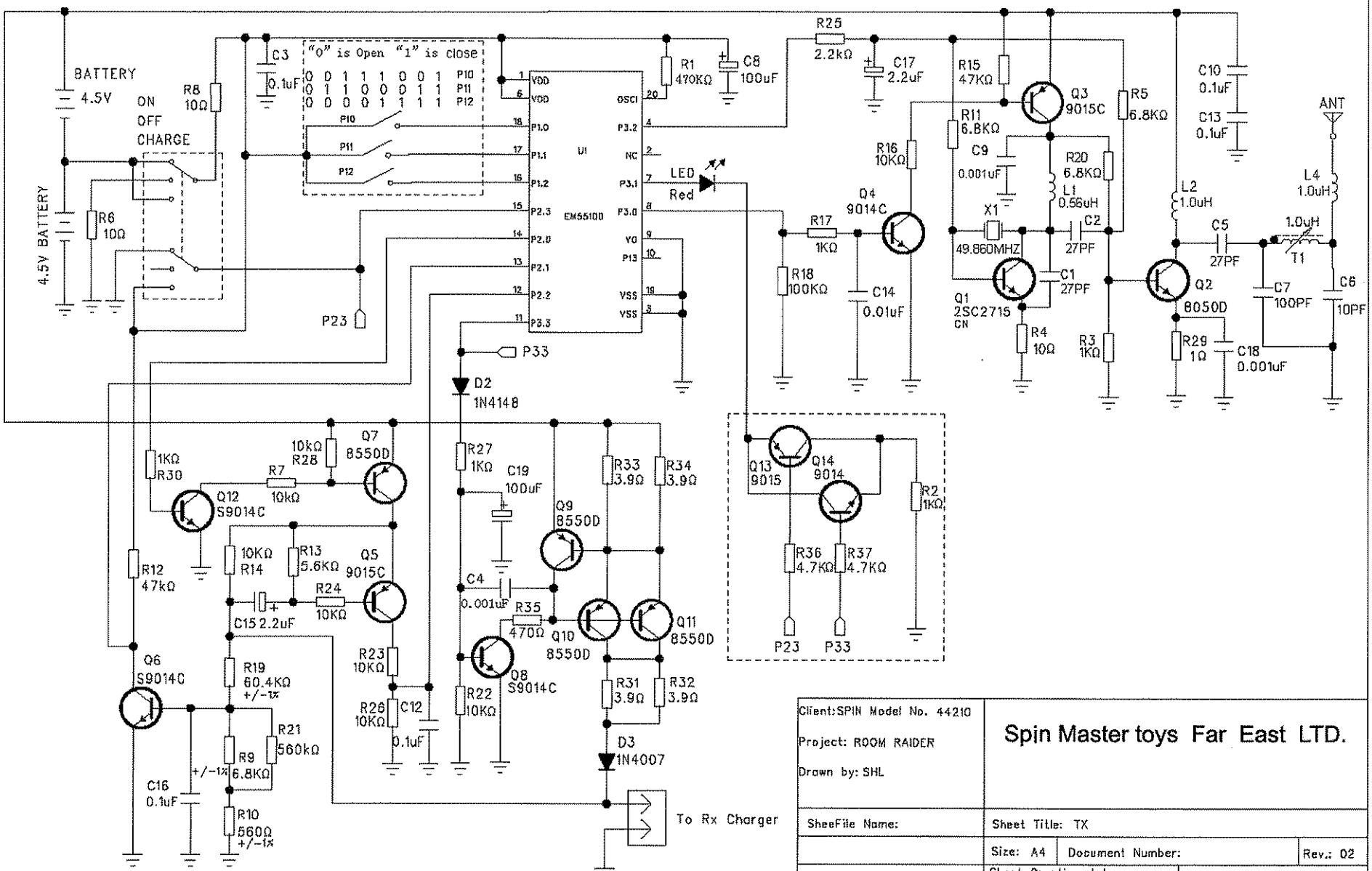

Client:SPIN Model No. 44210 Project: ROOM RAIDER Drawn by: SHL	Spin Master toys Far East LTD.
SheeFile Name:	Sheet Title: TX
	Size: A4 Document Number: Rev.: 02
	Sheet Creation date: 2006-05-20 SHEET 1 OF 1