ION
iPA179
BLOCK ROCKER® ICON
THIS DEVICE COMPLIES WITH PART 15 OF THE FCC RULES. OPERATION IS SUBJECT TO THE FOLLOWING TWO CONDITIONS: (1)THIS DEVICE MAY NOT CAUSE HARMFUL INTERFERENCE,AND (2) THIS DEVICE MUST ACCEPT ANY INTERFERENCE RECEIVED, INCLUDING INTERFERENCE THAT MAY CAUSE UNDESIRED OPERATION.
POWER INPUT RATING:
100-240VAC 50/60Hz, 100W
BATTERY CAPACITY:
6000mAh/11.1V, 66.6Wh
FREQ:
87.5-107.9MHz
US ADDRESS:
ION AUDIO, LLC
200 Scenic View Drive
Cumberland, RI 02864, USA
Bluetooth
BC
SCAN FOR SUPPORT
C
US
LISTED
Intertek
3043205
CONFORMS TO UL
STD. 62368-1
CERTIFIED TO CSA
STD. C22.2 NO. 62368-1
FCC ID: 2AB3E-IPA179
MADE IN CHINA

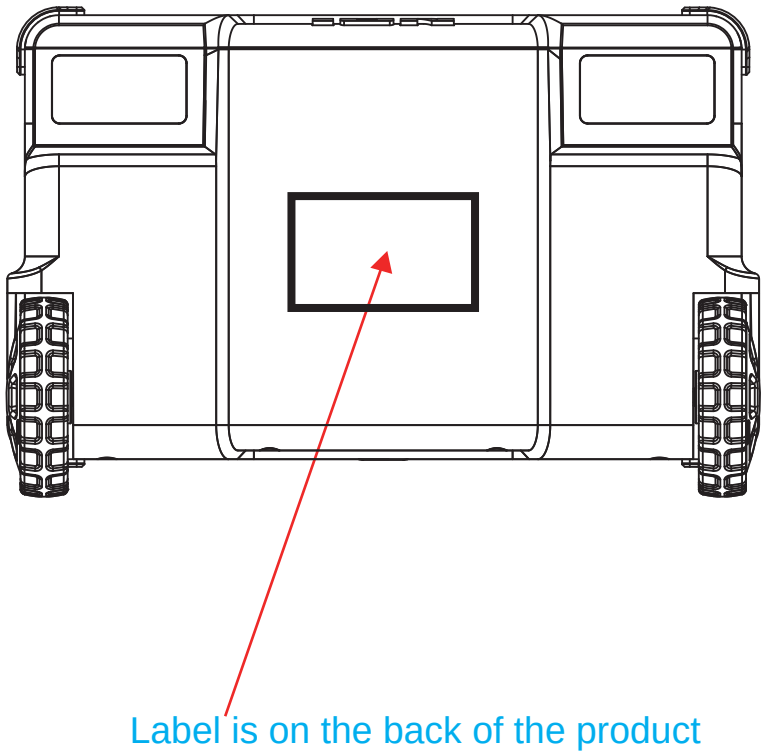
Label is on the back of the product