CHINO 1.5 M/B

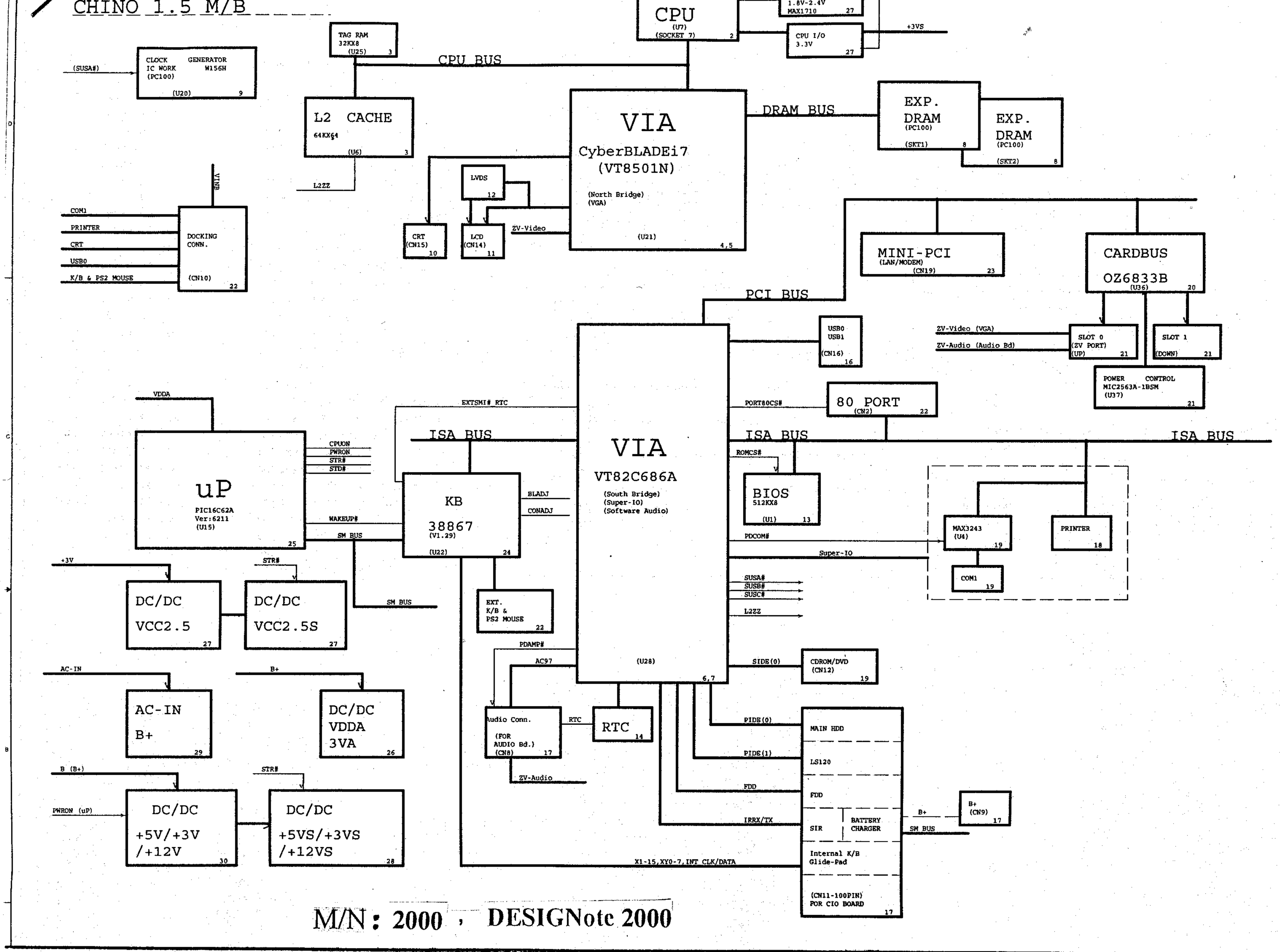

M/N : 2000 , DESIGNote 2000