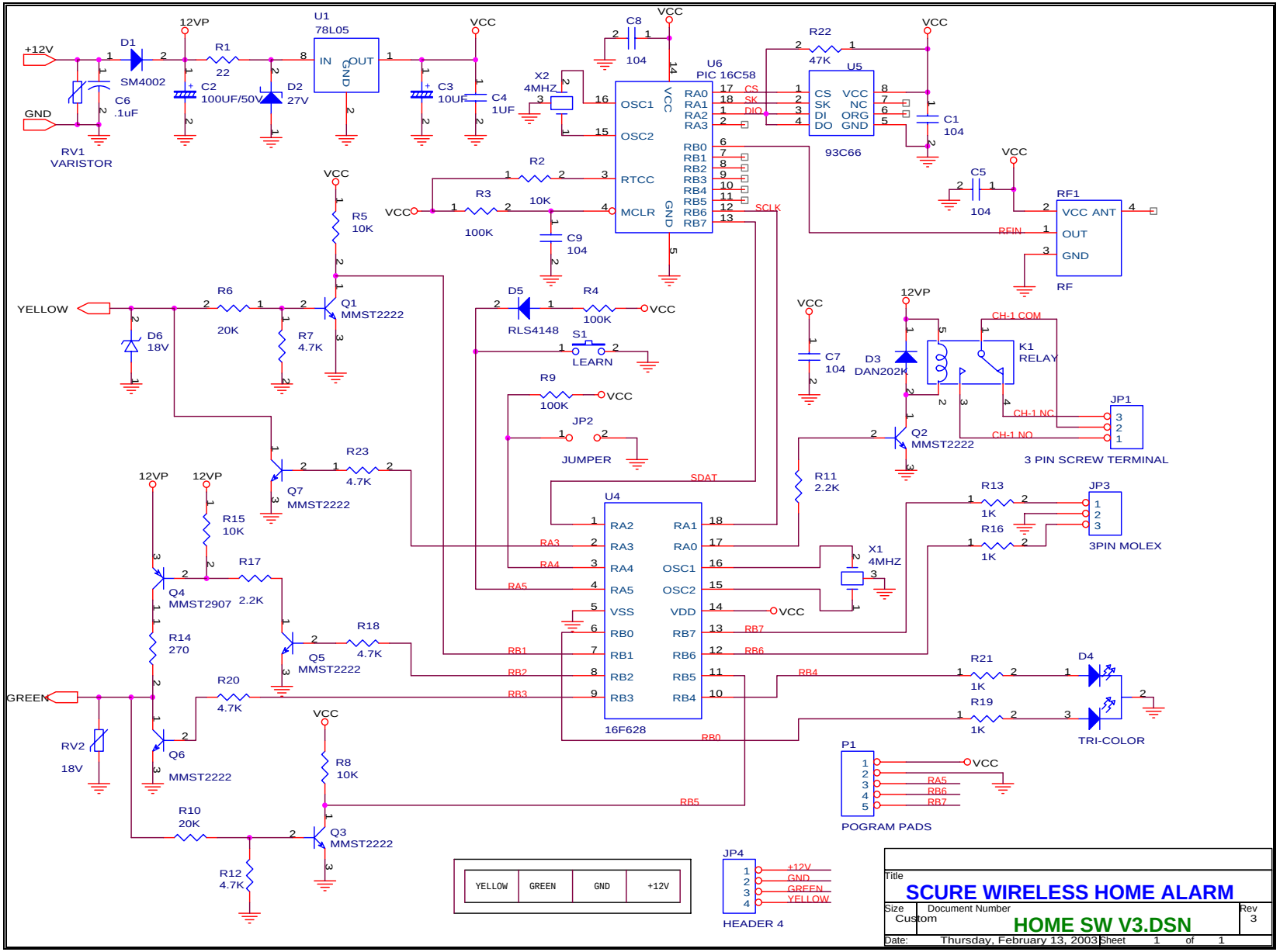
+12V
GND
D1
SM4002
C6
.1uF
RV1
VARISTOR
12VP
R1
22
C2
100UF/50V
D2
27V
U1
78L05
IN
OUT
GND
VCC
C3
10UF
C4
1UF
C8
104
X2
4MHZ
U6
PIC 16C58
OSC1
OSC2
RTCC
MCLR
RA0
RA1
RA2
RA3
RB0
RB1
RB2
RB3
RB4
RB5
RB6
RB7
CS
SK
DIO
SCLK
R22
47K
U5
CS
SK
DI
DO
VCC
NC
ORG
GND
93C66
C1
104
C5
104
RF1
VCC ANT
OUT
GND
RFIN
RF
R2
10K
R3
100K
C9
104
R5
10K
YELLOW
R6
20K
Q1
MMST2222
R7
4.7K
D6
18V
D5
RLS4148
R4
100K
S1
LEARN
R9
100K
JP2
JUMPER
C7
104
D3
DAN202K
K1
RELAY
CH-1 COM
CH-1 NC
CH-1 NO
JP1
3 PIN SCREW TERMINAL
Q2
MMST2222
R11
2.2K
R23
4.7K
Q7
MMST2222
R15
10K
R17
2.2K
Q4
MMST2907
R14
270
R18
4.7K
Q5
MMST2222
R20
4.7K
GREEN
RV2
18V
Q6
MMST2222
R8
10K
R10
20K
Q3
MMST2222
R12
4.7K
U4
16F628
SDAT
X1
4MHZ
R13
1K
R16
1K
JP3
3PIN MOLEX
R21
1K
R19
1K
D4
TRI-COLOR
P1
POGRAM PADS
YELLOW
GREEN
GND
+12V
JP4
HEADER 4
Title
SCURE WIRELESS HOME ALARM
Size
Custom
Document Number
HOME SW V3.DSN
Rev
3
Date:
Thursday, February 13, 2003
Sheet
1
of
1