MOD	Description
01	release drawing -18-10-17
02	

Reliability Test Spec
accorinding to WI7.1.9 (Reliability Test Working Instruction)
Default test standard is Test Standard A if no definition

RoHS2.0 REQUEST

ITEM	Cd	Hg	Pb	Cr6+	PBB	PBDE	OTHERS
PPM=<	100	1000	1000	1000	1000	1000	

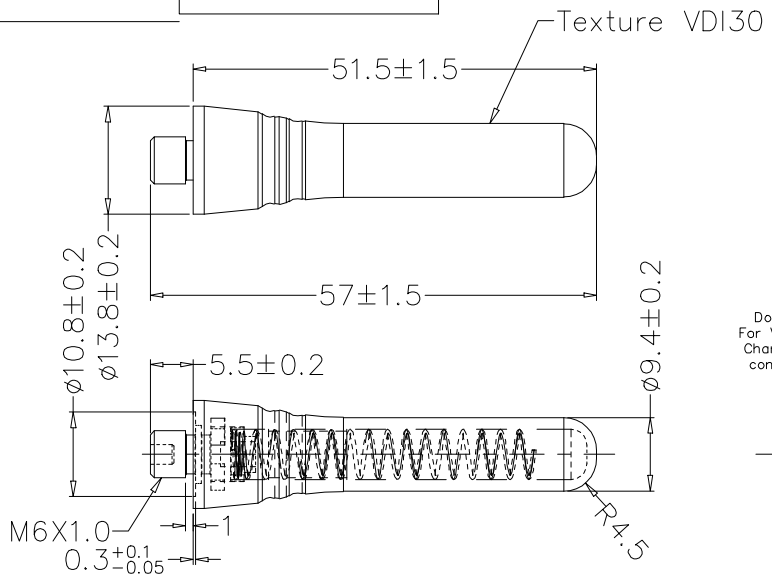

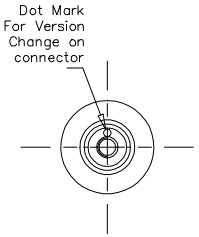

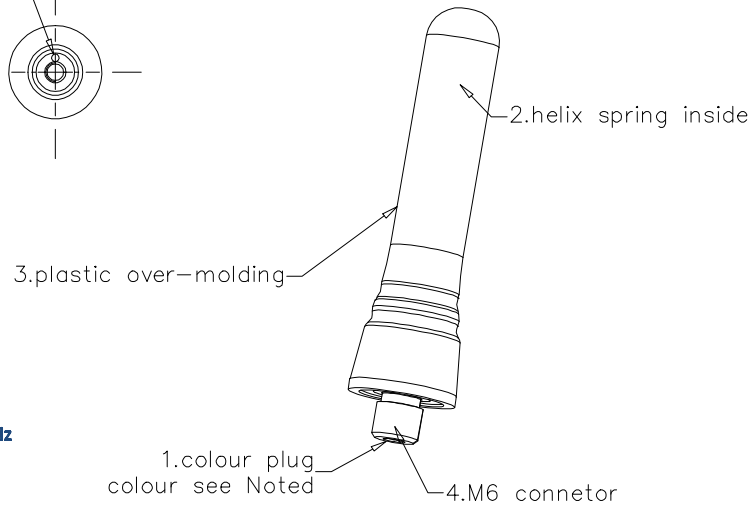

General Tolerance	
Dimension	Tolerance
copper to outline	±0.15
copper to copper	±0.05
hole to hole	±0.10
hole to copper	±0.15
hole to outline	±0.15
co outline to outline:punching once	±0.10
outline to outline:punching twice	±0.15
finger hole to outline	±0.15
etching hole	±0.03
puching hole	±0.05
silk screen around the pad	±0.3

Antenna Material&SEPC	
Part Name	Material&SEPC
1.Colour plug	EPDM colours: see noted
2.helix spring	piano wire+cu coating
3.Plastic Over Molding	Lubrizol Estane 58887 Black
4.M6 Connetor	C3604 +25um Ni COATING

Noted:

330-00016: SC21 - Extended Helical Antenna 420-470MHz
PULSE P/N:Z9013 Plug colour:Yellow 102U

Confidential
This is a proprietary information of Pulse Suzhou.
No reporduction/copying is allowed without permission.

Functional Characteristics Key <Cpk requirement : Cpk>)

◊ Process Capability Studies required(total pcs)
♦ Ongoing Statistical Process Control Required (total pcs)
* Critical dimension need to be measured, no CPK requirement (total pcs)

PULSE (SUZHOU) WIRELESS PRODUCTS CO.LTD.
Pulse Electronics
99 HUOJU RD. SUZHOU NEW DISTRICT 215009 P.R.CHINA
WWW.PULSEELECTRONICS.COM/ANTENNAS

PRODUCT(S)
330-00016: SC21 - Extended Helical Antenna 420-470MH

ITEM
Z9013

THIRD ANGLE PROJECTION

SCALE 1 : 1

DOCUMENT NUMBER

SHEET NUMBER	1 / 1		
GENERAL TOLERANCE			
CUSTOMER NUMBER			
DESIGN	SHINE	10/25/2018	
CHECKED			
APPROVED			
PART VERSION	V01	DOCUMENT VERSION	01

MOD	DATE	NAME
01		