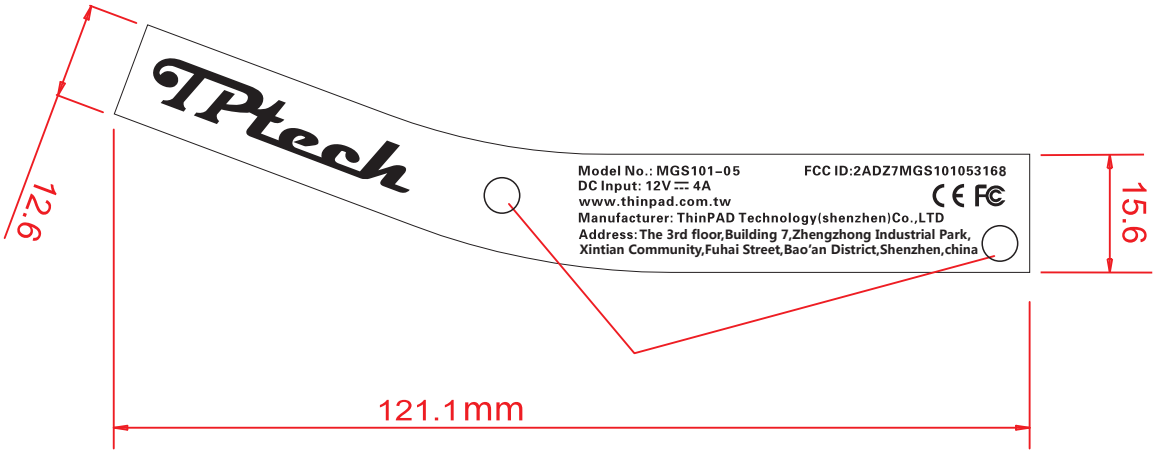
TPtech
Model No.: MGS101-05
FCC ID:2ADZ7MGS101053168
DC Input: 12V ⎓ 4A
www.thinpad.com.tw
Manufacturer: ThinPAD Technology(shenzhen)Co.,LTD
Address: The 3rd floor,Building 7,Zhengzhong Industrial Park,
Xintian Community,Fuhai Street,Bao'an District,Shenzhen,china
12.6
15.6
121.1mm

TPtech
TPtech