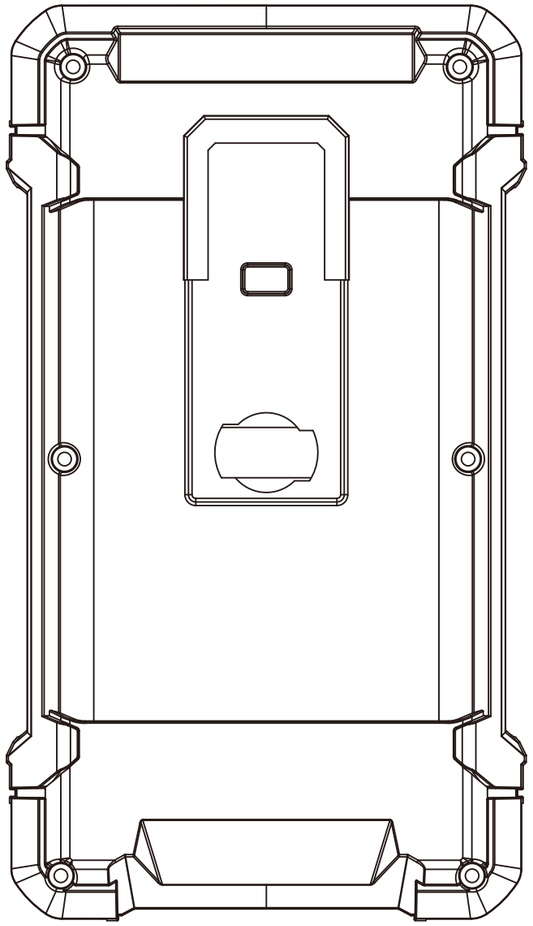

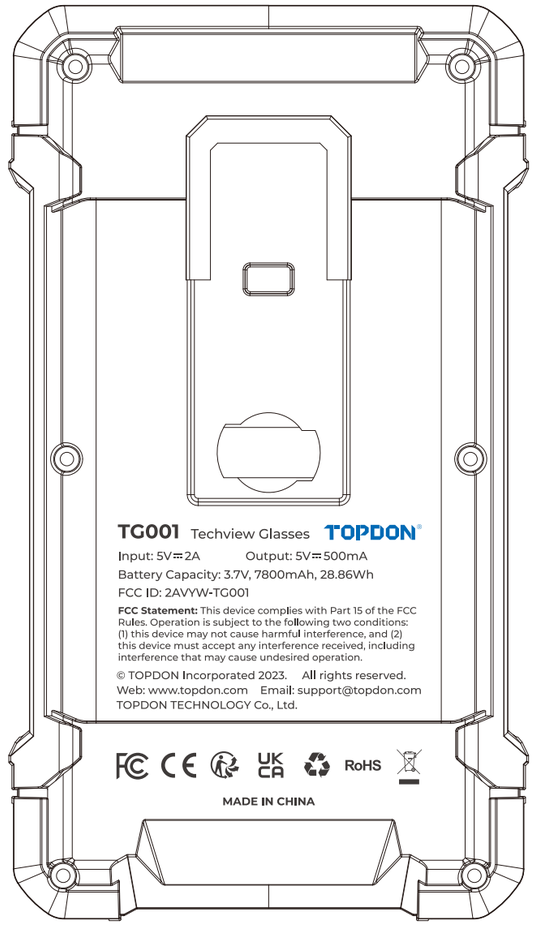
TG001 Techview Glasses TOPDON
Input: 5V⎓2A Output: 5V⎓500mA
Battery Capacity: 3.7V, 7800mAh, 28.86Wh
FCC ID: 2AVYW-TG001
FCC Statement: This device complies with Part 15 of the FCC Rules. Operation is subject to the following two conditions: (1) this device may not cause harmful interference, and (2) this device must accept any interference received, including interference that may cause undesired operation.
© TOPDON Incorporated 2023. All rights reserved.
Web: www.topdon.com Email: support@topdon.com
TOPDON TECHNOLOGY Co., Ltd.
UK CA
RoHS
MADE IN CHINA

蓝色：285C