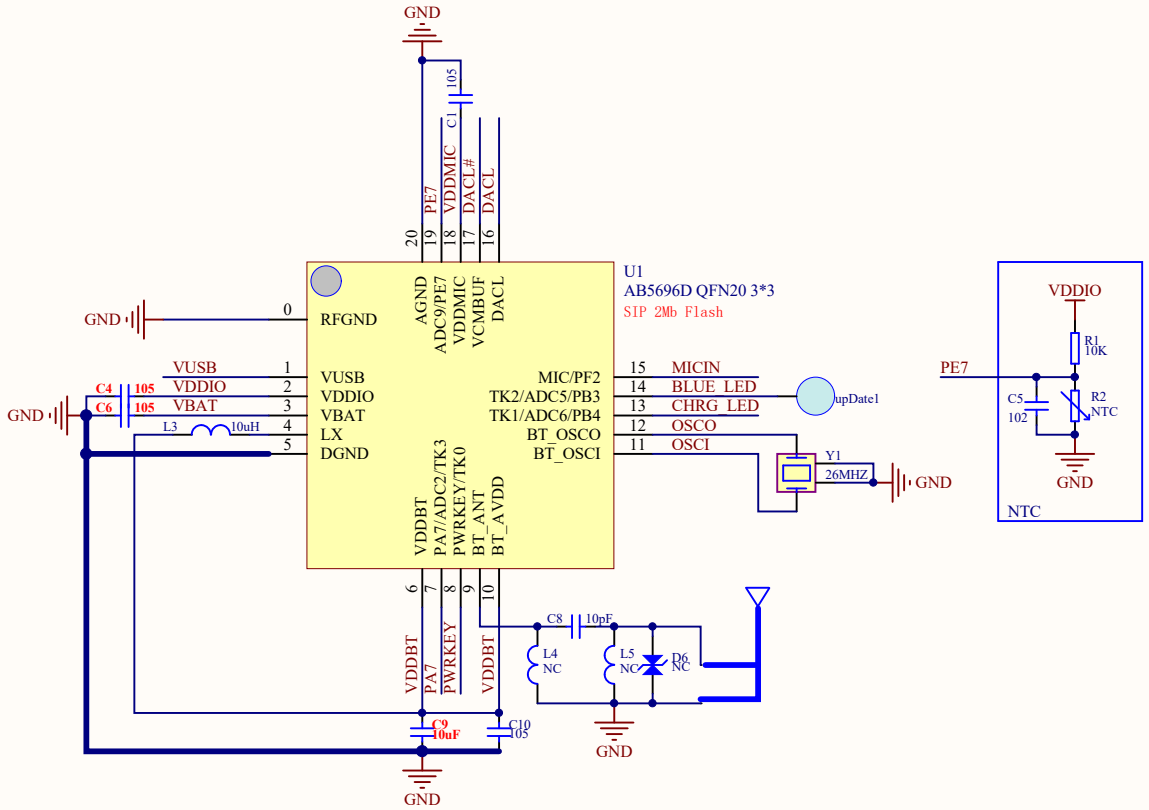

AB5696D QFN20-3*3 TWS

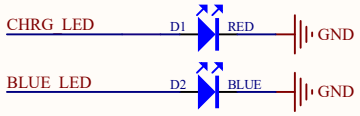

LED

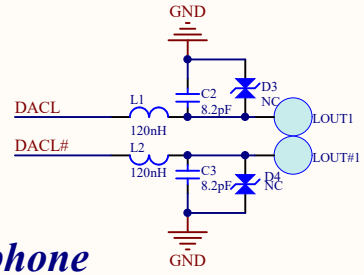

Earphone

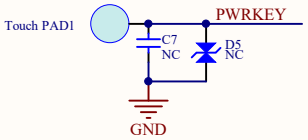

Touch

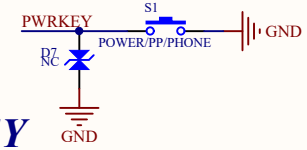

KEY

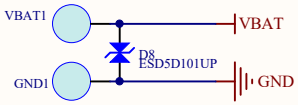

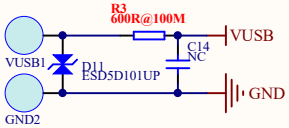

POWER

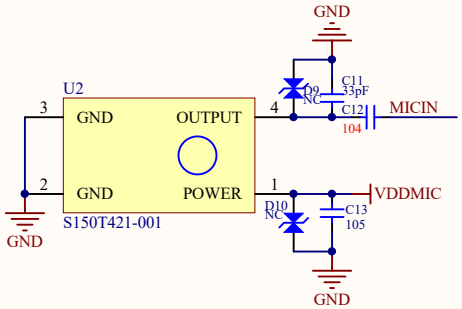

FF MIC