REVISIONS							
REV	ZONE	NO.	DESCRIPTION	E.C.	BY	APVD.	DATE
A			RELEASE PER EDR # 71677		DD	RK	7/30/03
B			RELEASE PER EC # EC18562		DD	RK	8/22/03
C			RELEASE PER EC # EC18895		KK	RK	10/07/03

GEMINI

COLOR INTERFACE BOARD

SCHEMATIC

REV C

TABLE OF CONTENTS:

1. TITLE PAGE, REVISION NOTES
2. MTM INTERFACE
3. LCD TIMING
4. BACKLIGHT AND POWER SUPPLIES
5. GAMMA AND GATE DRIVERS
6. TFT PANEL POWER SEQUENCING
7. LCD INTERFACE

BOM TABLE (DNI=Do Not Install)

Reference Designator	Build 01
R6	DNI
C234	DNI

CHANGES FROM..TO:

REV A

INITIAL RELEASE

REV B

CHANGED C5 AND C180 TO 10UF 1206 FOR
CORRECTED NOTE FOR DISPLAY POWER SEQUENCING

REV C

REMOVED C234

SCHEMATIC ROOMS:

ROOMS:

LCD_CONTROLLER

LED_BKLT

LCD_SUPPLIES

GAMMA_DRIVERS

TFT_PWR_SEQ

ITEM	QTY.	PART NO.	DESCRIPTION	REMARKS/REF.SYMBOL

PARTS LIST

NEXT ASSY	USED ON

THE DWG. AND SPECIFICATION CONTAINED HEREON ARE PROPRIETARY AND MUST NOT BE USED, COPIED, REPRODUCED OR OTHERWISE DEALT WITH NOR ITS CONTENTS COMMUNICATED TO OTHERS EXCEPT IN ACCORDANCE WITH WRITTEN INSTRUCTIONS RECEIVED FROM SYMBOL TECHNOLOGIES INC.

DO NOT SCALE DRAWING

DIMENSIONS ARE IN INCHES

UNLESS OTHERWISE SPECIFIED

	MM	INCH
.XX	±	± .01
.XXX	±	± .005

ANGLES ± 1° FRACTIONS ± 1/64

MATERIAL:

FINISH:

APPROVALS		DATE
DRAWN	G. COLELLA	10/31/02
CHECKED	R. KOTSAY	10/31/02
ENGINEER	G. COLELLA	10/31/02
MFG. ENG.		
PRODUCT		
QUALITY		
TEST ENG.		

SYMBOL TECHNOLOGIES INC.

Bohemia, New York

GEMINI COLOR INTERFACE BOARD
SCHEMATIC

SIZE	DWG. NO.	REV
D	17-59785-01	C

Tue Oct 7 09:07:35 2003

SHEET 1 OF 7

REVISIONS							
REV	ZONE	NO.	DESCRIPTION	E.C.	BY	APVD.	DATE
			SEE SHEET 1				

MTM INTERFACE

CONNECTOR TO MTM

50-12100-1010

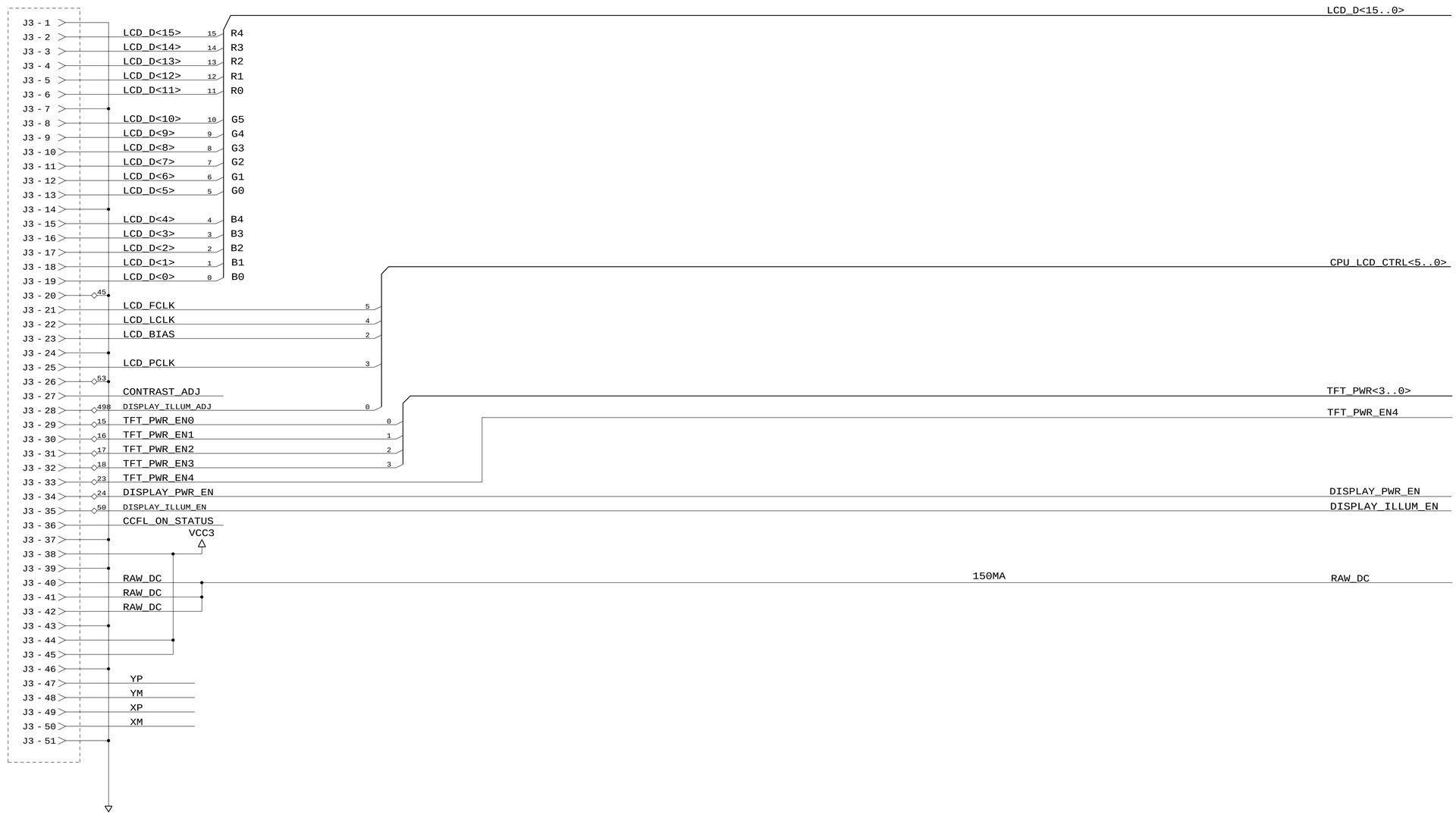

SYMBOL TECHNOLOGIES INC.		
Bohemia, New York		
GEMINI COLOR INTERFACE BOARD		
MTM INTERFACE		
SIZE D	DWG. NO. 17-59785-01	REV C
Tue Oct 7 09:19:43 2003	SHEET 2 OF 7	

REVISIONS							
REV	ZONE	NO.	DESCRIPTION	E.C.	BY	APVD.	DATE
			SEE SHEET 1				

LCD TIMING CONTROLLER

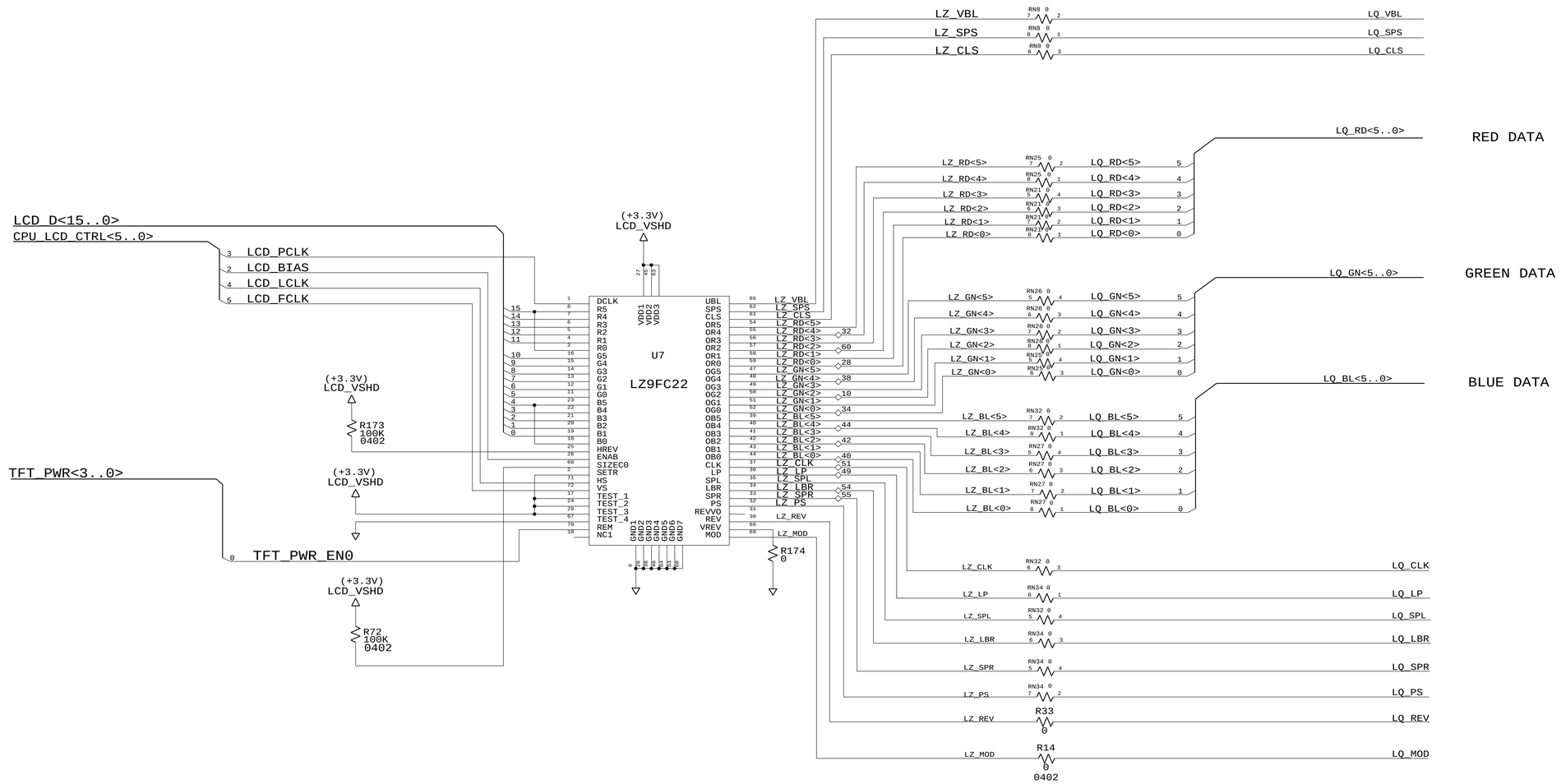

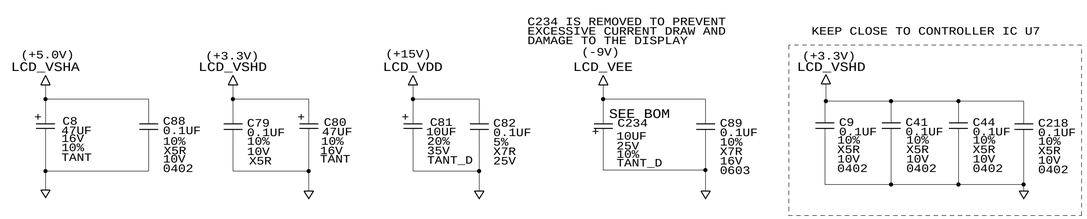

SPARES

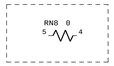

SYMBOL TECHNOLOGIES INC.
Bohemia, New York

GEMINI COLOR INTERFACE BOARD
LCD TIMING

SIZE	DWG. NO.	REV
D	17-59785-01	C

Tue Oct 7 09:19:35 2003 | SHEET 3 OF 7

REVISIONS							
REV	ZONE	NO.	DESCRIPTION	E.C.	BY	APVD.	DATE
			SEE SHEET 1				

LED BACKLIGHT & POWER SUPPLIES

LED BACKLIGHT

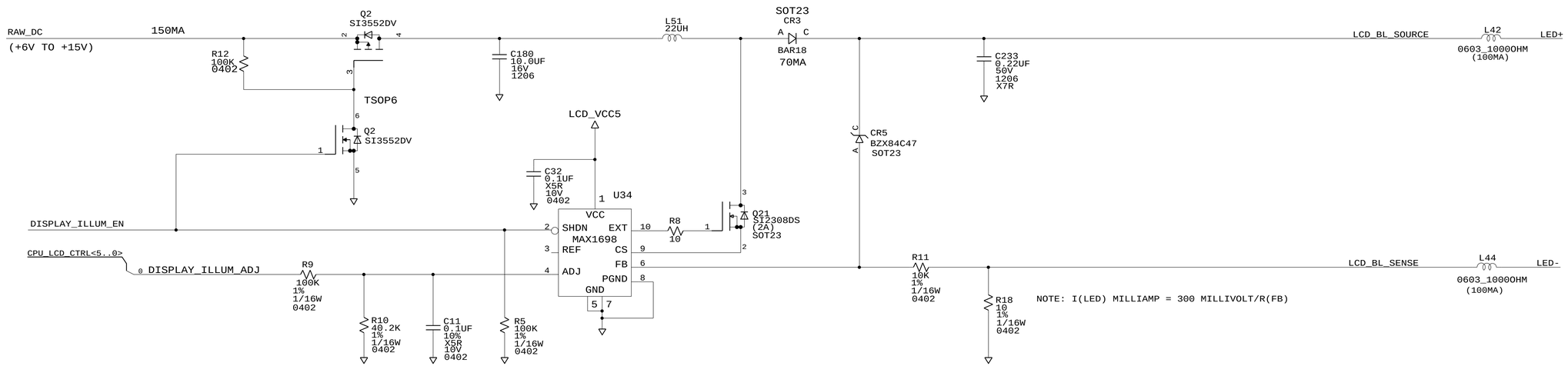

+15 & -15 VOLT SUPPLY

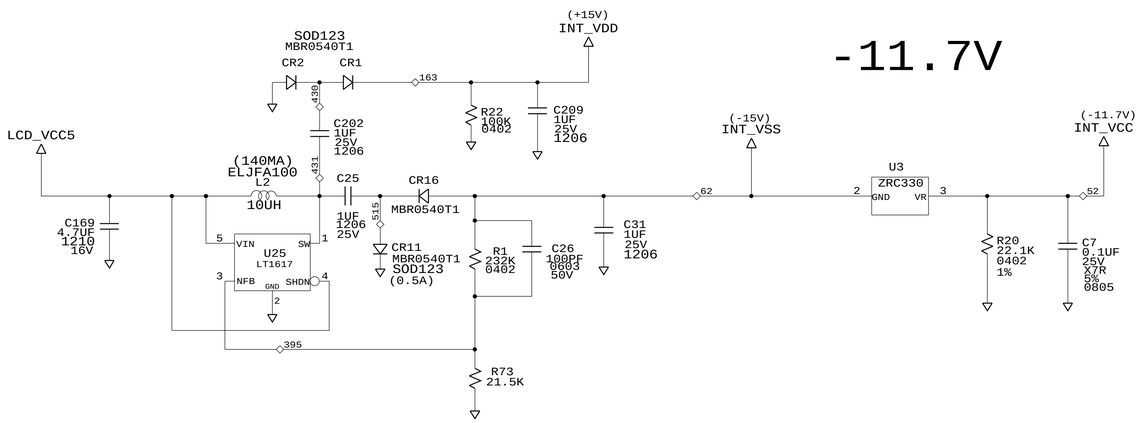

-11.7V

+5.0V SUPPLY

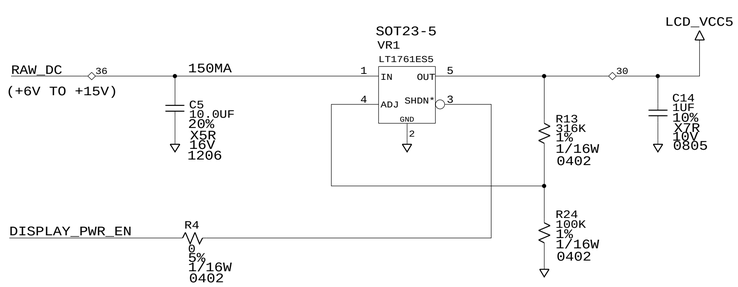

SYMBOL TECHNOLOGIES INC.
Bohemia, New York

GEMINI COLOR INTERFACE BOARD
LED BACKLIGHT & POWER SUPPLIES

SIZE	DWG. NO.	REV
D	17-59785-01	C

Tue Oct 7 09:19:37 2003 | SHEET 4 OF 7

REVISIONS							
REV	ZONE	NO.	DESCRIPTION	E.C.	BY	APVD.	DATE
			SEE SHEET 1				

GAMMA & GATE DRIVERS

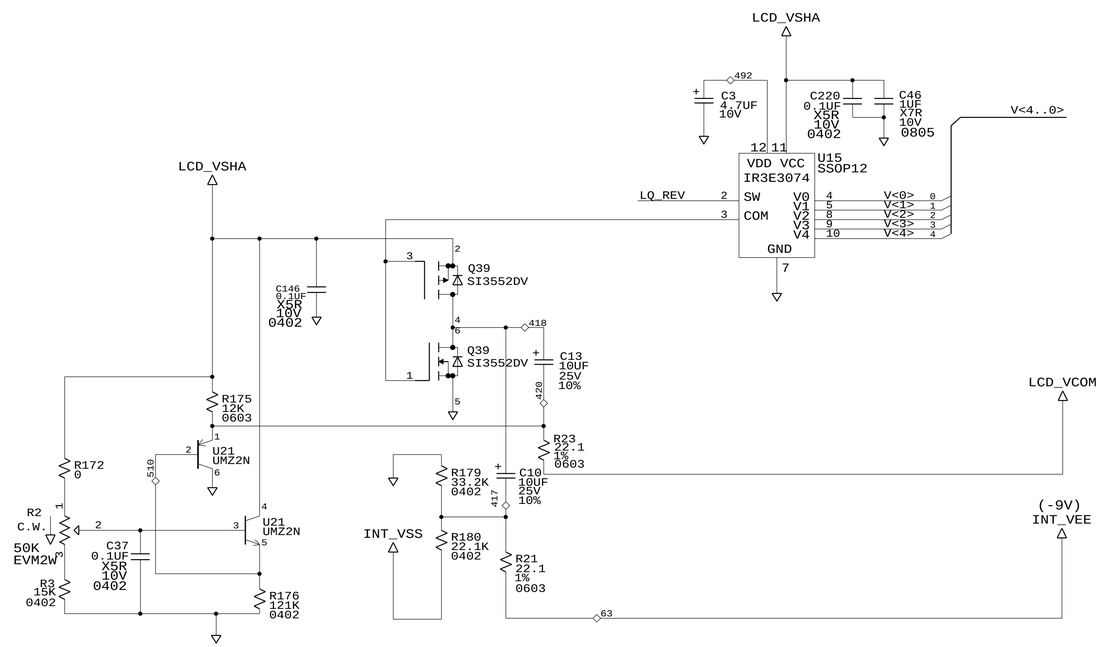

NOTE: COM MUST BE CALIBRATED ON THE MANUFACTURING FLOOR WITH THE PANEL THAT WILL BE USED FOR THAT PARTICULAR UNIT.

SYMBOL TECHNOLOGIES INC.
Bohemia, New York

GEMINI COLOR INTERFACE BOARD
GAMMA & GATE DRIVERS

SIZE	DWG. NO.	REV
D	17-59785-01	C

Tue Oct 7 09:19:38 2003 | SHEET 5 OF 7

REVISIONS							
REV	ZONE	NO.	DESCRIPTION	E.C.	BY	APVD.	DATE
			SEE SHEET 1				

TFT PANEL POWER SEQUENCING

TFT_PWR<3..0>

DISPLAY 5.0 VOLTS

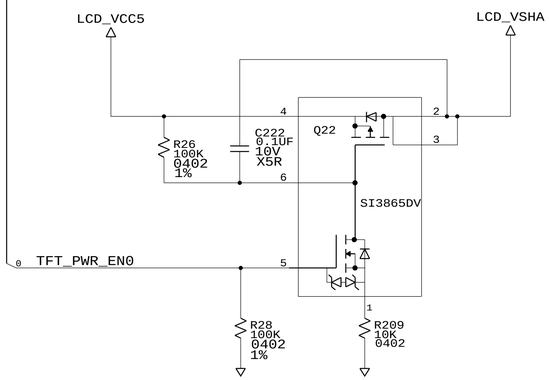

DISPLAY +15.0 VOLTS

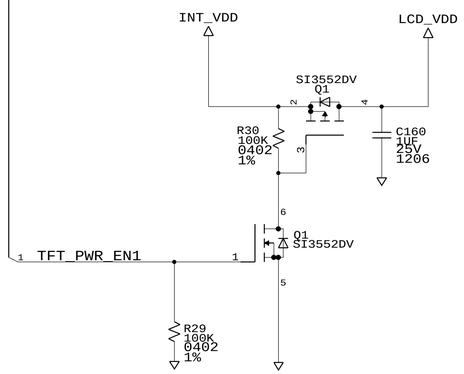

DISPLAY VEE -9.0 VOLTS

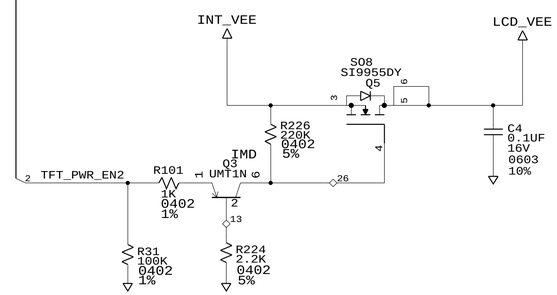

DISPLAY -15.0 VOLTS

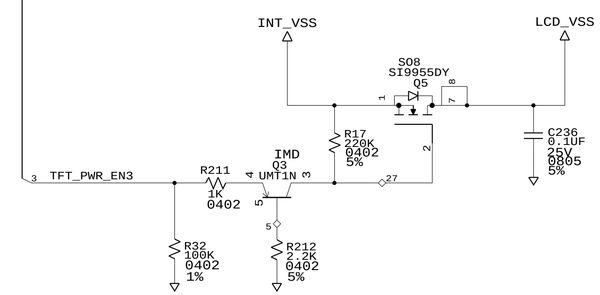

DISPLAY 3.3 VOLTS

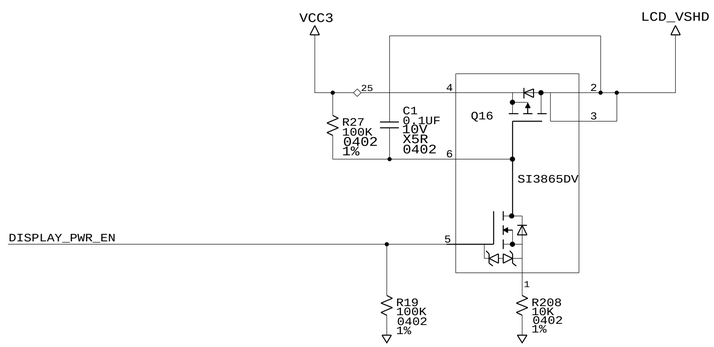

DISPLAY -11.7 VOLTS

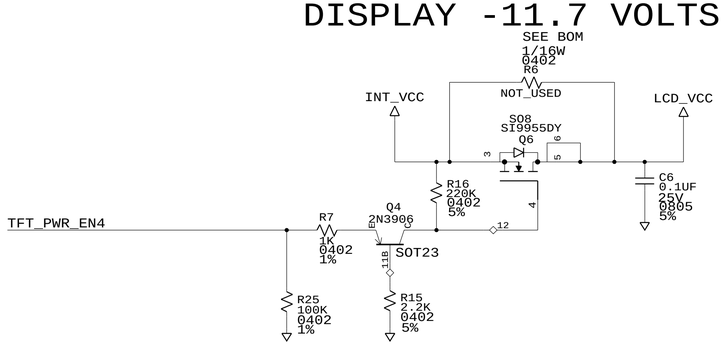

TFT DISPLAY PWR

VSHD: +3.3VDC @ 1.8 MA(TYP)(3.6 MA MAX)
VSHA: +5.0VDC @ 5 MA(TYP)(10 MA MAX)
VCC : -11.7VDC @ -0.02MA(TYP)(-0.04MA MAX)
VSS : -15VDC @ -0.06MA(TYP)(-0.12MA MAX)
VEE : -9.0VDC @ -0.03MA(TYP)(-0.06MA MAX)
VDD : +15 VDC @ 0.05MA(TYP)(0.10MA MAX)

VCOM: (+/-2.5)+1.1VDC

POWER SEQUENCE

TURN ON
VSHD->VSHA->VSS->VCC->VEE->VDD

TURN OFF
VDD->VEE->VCC->VSS->VSHA->VSHD

SPARES

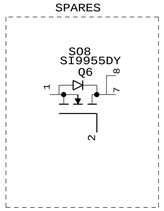

SYMBOL TECHNOLOGIES INC.
Bohemia, New York

GEMINI COLOR INTERFACE BOARD
LCD POWER SEQUENCING

SIZE	DWG. NO.	REV
D	17-59785-01	C

Tue Oct 7 09:19:40 2003 SHEET 6 OF 7

REVISIONS							
REV	ZONE	NO.	DESCRIPTION	E.C.	BY	APVD.	DATE
			SEE SHEET 1				

LCD INTERFACE

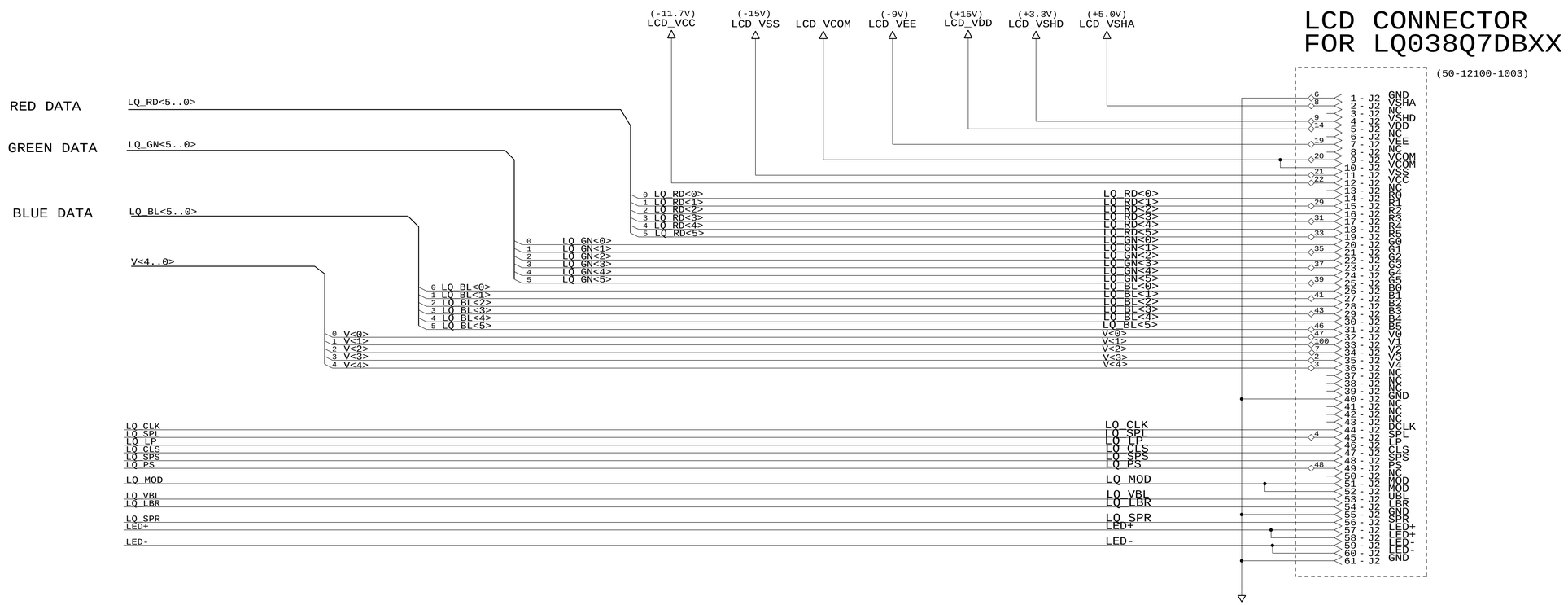

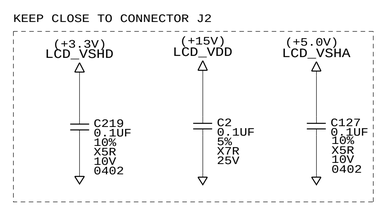

SYMBOL TECHNOLOGIES INC.
Bohemia, New York

GEMINI COLOR INTERFACE BOARD
LCD INTERFACE

SIZE	DWG. NO.	REV
D	17-59785-01	C

Tue Oct 7 09:19:42 2003 | SHEET 7 OF 7

REVISIONS							
REV	ZONE	NO.	DESCRIPTION	E.C.	BY	APVD.	DATE
A			RELEASE PER EDR # 72523		MV	R.KOTSAY	12/11/03

GEMINI
MAIN TERMINAL MODULE (MTM) SCHEMATIC
(WITH EMBEDDED 802.11B RADIO)
REV A

CONFIGURATIONS:

-01 : 64 MBYTE FLASH / 64 MBYTE SDRAM WITH EMBEDDED T3 RADIO
-02 : 32 MBYTE FLASH / 32 MBYTE SDRAM WITH EMBEDDED T3 RADIO
-03 : 64 MBYTE FLASH / 128 MBYTE SDRAM WITH EMBEDDED T3 RADIO
-04 : 32 MBYTE FLASH / 32 MBYTE SDRAM BATCH (NO RADIO)
-05 : 64 MBYTE FLASH / 64 MBYTE SDRAM BATCH (NO RADIO)
-06 : 64 MBYTE FLASH /128 MBYTE SDRAM BATCH (NO RADIO)

POPULATIONS:

1 NOT POPULATED ON ANY CONFIGURATION

CHANGES:

CHANGES FROM 64436 REV 5 : NONE

NOTES:

1. ALL RESISTORS ARE 0402, 5% UNLESS NOTED OTHERWISE
2. ALL CAPACITORS ARE 0402, 10V, X7R OR COG, 10% UNLESS NOTED OTHERWISE

POWER AND GROUND LIST - 1

DESIGNATOR		PART TYPE
U9		LCX08-TSSOP14-VCC=VCC3
GND	VCC3	
7	14	
U19		NC7SZ11-SC70-6-VCC=VCC3
GND	VCC3	
2	5	
U22		TC7S00FU-SOT23-5-VCC=VCC3
GND	VCC3	
3	5	
U26		SAM256MB_WIDE-SAM256MB_WIDE-VCA
GND	VCCF	
A1	A9	
E3	E7	
J1	J9	
U30		SAM256MB_WIDE-SAM256MB_WIDE-VCA
GND	VCCF	
A1	A9	
E3	E7	
J1	J9	
U33		AHC1G32-SC70-VCC=VCC3
GND	VCC3	
3	5	
U37		28F256K3-EBGA64-INT-VCC=VCCF
GND	VCCF	
B2	A6	
H4	H3	
U38		NC7SZ11-SC70-6-VCC=VCC3
GND	VCC3	
2	5	
U39		NC7SZ27-SC70-6-VCC=VCC3
GND	VCC3	
2	5	
U40		NC7SZ11-SC70-6-VCC=VCC3
GND	VCC3	
2	5	
U44		LVC1G17-SC70-VCC=VCC3
GND	VCC3	
3	5	
U48		28F256K3-EBGA64-INT-VCC=VCCF
GND	VCCF	
B2	A6	
H4	H3	
U55		LVC1G17-SC70-VCC=VCC3
GND	VCC3	
3	5	
U56		LVC1G17-SC70-VCC=VCC3
GND	VCC3	
3	5	
U304		AHC1G32-SC70-VCC=3VDA
3VDA	GND	
5	3	

SCHEMATIC ROOMS

ROOMS:

ACIN	COMMCONN
ASIC	DISPLAYCONN
AUDIO	IMAGERCONN
AUDIOSUPPLY	POWERCONN
BACKUPBATTERY	SCANNERCONN
BATTERYCHARGER	SDMMCCONN
CPLD	TRIGCONN
CURRENTMONITOR	KEYBOARD_BACKLIGHT
FAULTDETECT	IOCONN
HISPEED	TOUCHSCREENCONN
RADIOATETP	
OPTIONBUFF	
POWERMICRO	
RADIODIGITAL	
RADIOIF	
RADIORF	
USB	
3VSUPPLY	

TABLE OF CONTENTS

PAGE 1: TITLE PAGE, REVISION NOTES
PAGE 2: XSCALE PROCESSOR
PAGE 3: MEMORY & BUFFERS
PAGE 4: LIGHTHOUSE ASIC
PAGE 5: 802.11B RADIO - BASEBAND
PAGE 6: 802.11B RADIO - IF
PAGE 7: 802.11B RADIO - RF
PAGE 8: AUDIO (PIEZO)
PAGE 9: POWER MICRO
PAGE 10: DISPLAY INTERFACE & OUTHOUSE CPLD
PAGE 11: SCANNER & IMAGER INTERFACES
PAGE 12: SD/MMC, COMMUNICATIONS & TRIGGER INTERFACES
PAGE 13: USER INTERFACES
PAGE 14: POWER, BATTERY CHARGER & POWER SUPPLIES
PAGE 15: CORE SUPPLY, BACKUP BATTERY & ACIN
PAGE 16: MTM TO OPTION BOARD INTERFACE

CRITICAL SIGNALS

SIGNALS:

BX_SDRAS,BX_SDCAS,BX_SDCS0,BX_SDCLK1,BX_WE,BX_DQM3..0
MMCMD,MMDAT,MMCD_DAT3_CS
YP,YM,XP,XM
BUF_EN*
D_DIR
BX_ADDR, BX_DATA
LCD<15..0>
SPI_DO,SPI_DI
PIX_DATA<7..0>
RD/WR*
USB_DPLUS,USB_DMINUS

SCHEMATIC ATTRIBUTES

ATTRIBUTES:

NET_PHYSICAL_TYPE
CLOCK_NET
DIFFERENTIAL_PAIR
IMPEDANCE_RULE

CLOCK TABLE

CLOCK:	FREQUENCY:
SDCLK1	(100 MHZ)
LCD_PCLK	(MONO=1.66MHZ, COLOR=6.22MHZ))
SDCLK_0	(50 MHZ)
SDCLK_2	(50 MHZ)
SDCLK0	(50 MHZ)
CLK_48M	(50 MHZ)
BX_SDCLK1	(50 MHZ)
48MHZ_GPIO7	(48 MHZ)
MMCLK	(20 MHZ)
AC97_BITCLK	(12.288 MHZ)
USB	(12 MHZ)
PIX_CLK	(12 MHZ)
SPI_CLK	(5 MHZ)
TCLK	(12 MHZ)
IRDA	(4 MHZ)
CLK_3M6	(3.6 MHZ)
SCL	(400 KHZ)
CLK_32K	(32 KHZ)
CPLD_CLK_32K	(32 KHZ)
ISL_CLK	(1 MHZ)
44MHZ_CW	(44 MHZ)
44MHZ_REF	(44 MHZ)

NEXT ASSY	USED ON

THE DWG. AND SPECIFICATION CONTAINED HEREON ARE PROPRIETARY AND MUST NOT BE USED, COPIED, REPRODUCED OR OTHERWISE DEALT WITH NOR ITS CONTENTS COMMUNICATED TO OTHERS EXCEPT IN ACCORDANCE WITH WRITTEN INSTRUCTIONS RECEIVED FROM SYMBOL TECHNOLOGIES INC.

DO NOT SCALE DRAWING

DIMENSIONS ARE IN INCHES
UNLESS OTHERWISE SPECIFIED

	MM	INCH
.XX	±	± .01
.XXX	±	± .005
ANGLES ± 1°	FRACTIONS ± 1/64	

MATERIAL:

FINISH:

ITEM	QTY.	PART NO.	DESCRIPTION	REMARKS/REF.SYMBOL

PARTS LIST

APPROVALS		DATE
DRAWN	D. DEMEO	12/11/03
CHECKED	R. KOTSAY	12/11/03
ENGINEER	D. DEMEO	12/11/03
MFG. ENG.	P. IASSO	12/11/03
PRODUCT	G. STILL	12/11/03
QUALITY	B. WATSON	12/11/03
TEST ENG.	D. REED	12/11/03

SYMBOL TECHNOLOGIES INC.
Bohemia, New York

GEMINI MTM BOARD SCHEMATIC

SIZE D | DWG. NO. 17-64436-01 | REV A

Thu Dec 11 15:55:51 2003 | SHEET 1 OF 16

XSCALE PROCESSOR

REVISIONS							
REV	ZONE	NO.	DESCRIPTION	E.C.	BY	APVD.	DATE
			SEE SHEET 1				

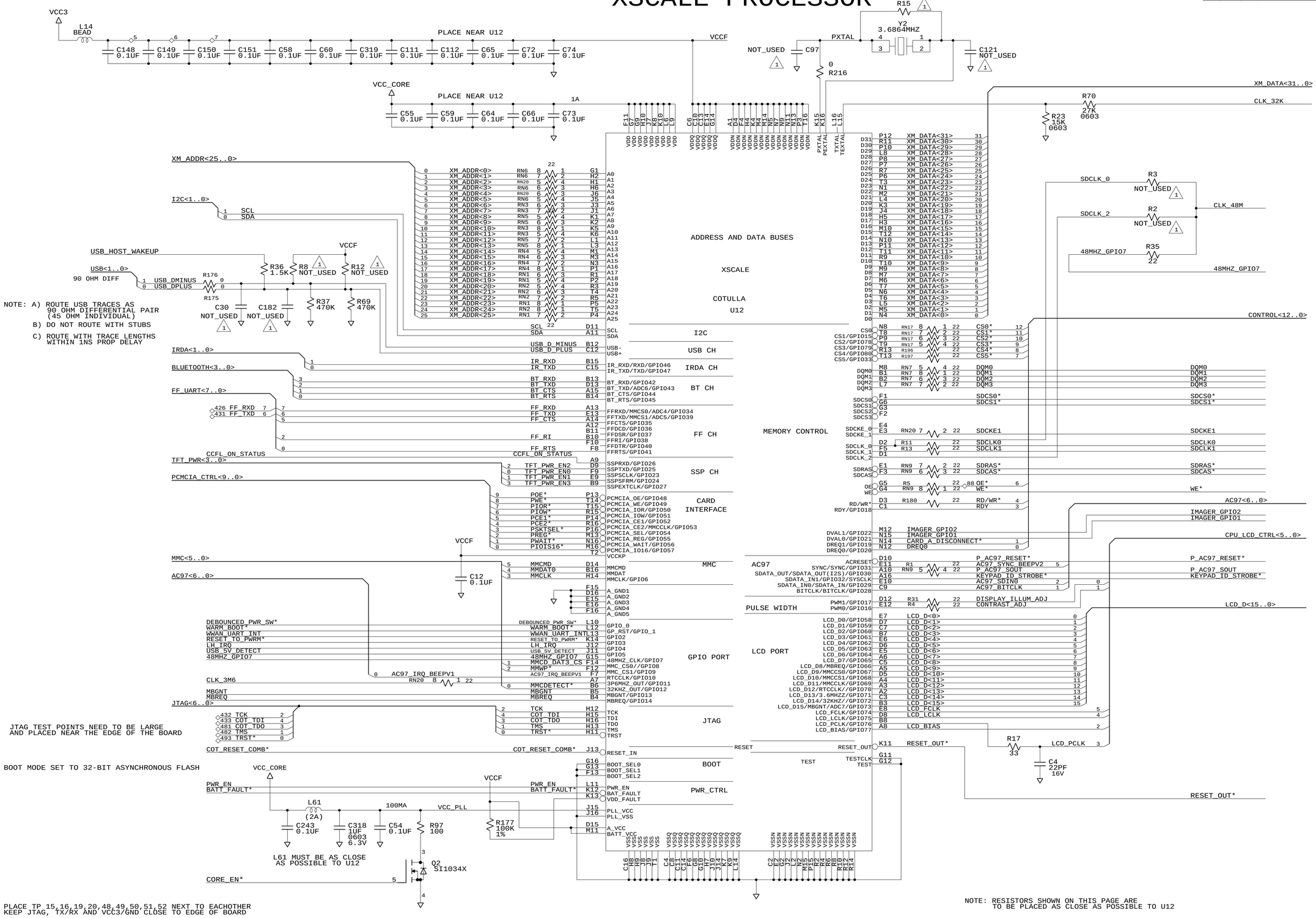

ROOMS:
ALL COMPONENTS : HISPEED

SYMBOL TECHNOLOGIES INC.
Bohemia, New York

GEMINI MTM BOARD
XSCALE PROCESSOR

SIZE	DWG. NO.	REV
D	17-64436-01	A

Thu Dec 11 15:58:13 2003 | SHEET 2 OF 16

REVISIONS						
REV	ZONE	NO.	DESCRIPTION	E.C.	BY	APVD.	DATE
			SEE SHEET 1				

MEMORY & BUFFERS

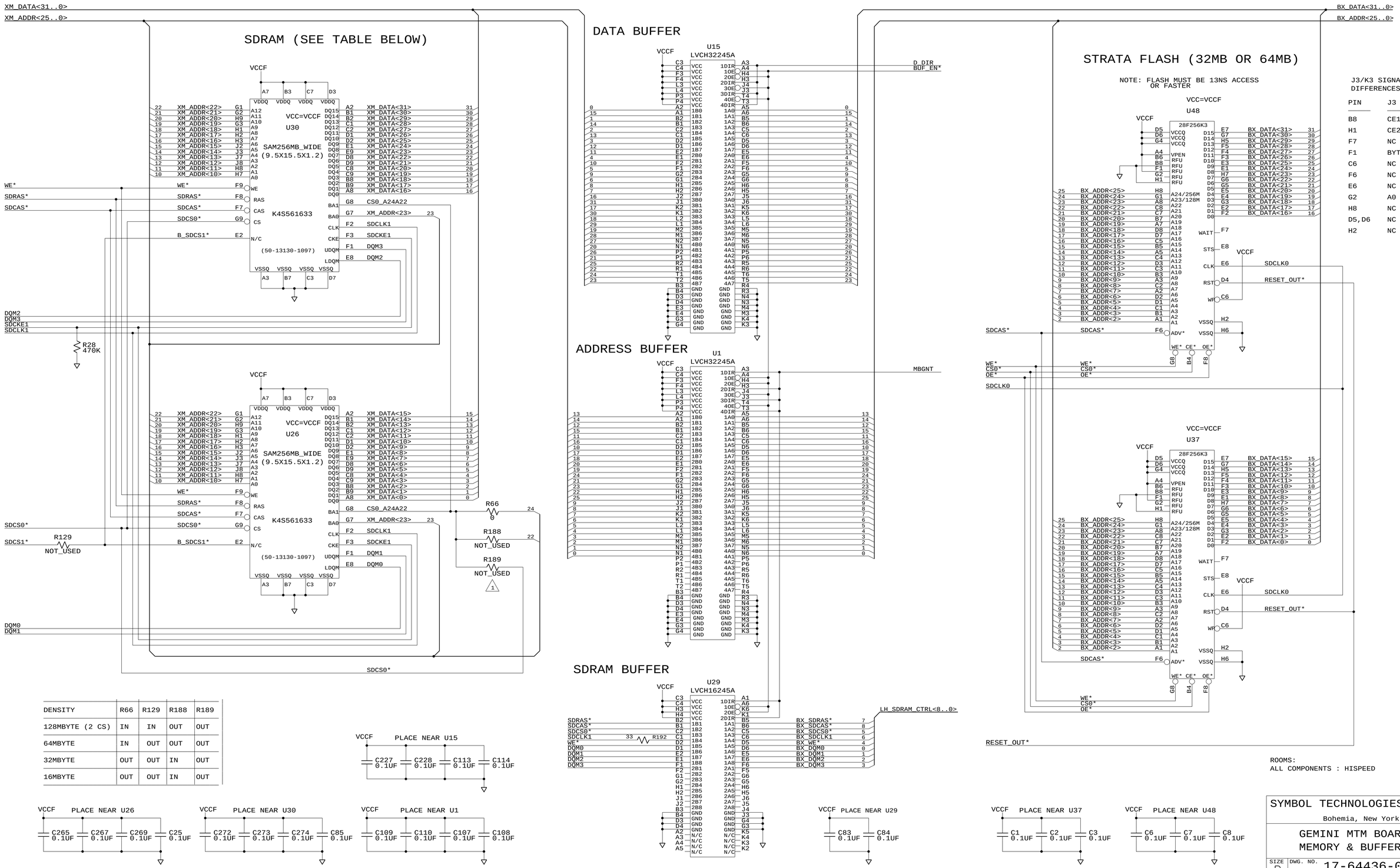

DENSITY	R66	R129	R188	R189
128MBYTE (2 CS)	IN	IN	OUT	OUT
64MBYTE	IN	OUT	OUT	OUT
32MBYTE	OUT	OUT	IN	OUT
16MBYTE	OUT	OUT	IN	OUT

SYMBOL TECHNOLOGIES INC.
Bohemia, New York

GEMINI MTM BOARD
MEMORY & BUFFERS

SIZE	DWG. NO.	REV
D	17-64436-01	A

Thu Dec 11 15:58:18 2003 SHEET 3 OF 16

REVISIONS							
REV	ZONE	NO.	DESCRIPTION	E.C.	BY	APVD.	DATE
			SEE SHEET 1				

LIGHTHOUSE ASIC

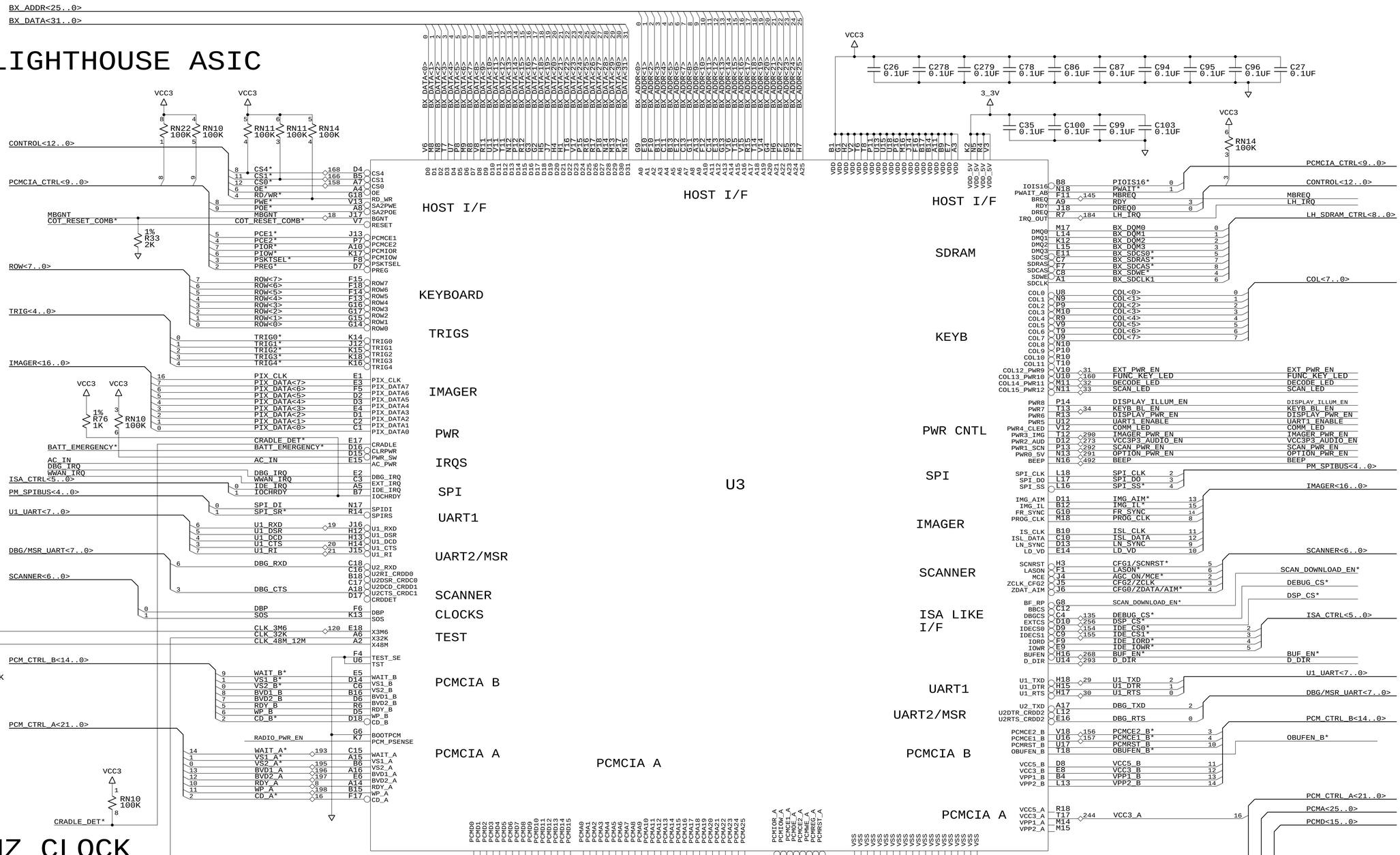

32KHZ CLOCK

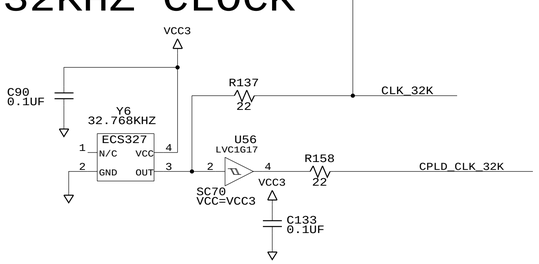

ROOMS:
ALL COMPONENTS : ASIC

SYMBOL TECHNOLOGIES INC.
Bohemia, New York

GEMINI MTM BOARD
LIGHTHOUSE ASIC

SIZE	DWG. NO.	REV
D	17-64436-01	A

Thu Dec 11 15:58:32 2003 | SHEET 4 OF 16

REVISIONS							
REV	ZONE	NO.	DESCRIPTION	E.C.	BY	APVD.	DATE
			SEE SHEET 1				

T3-BASED 802.11B RADIO - BASEBAND

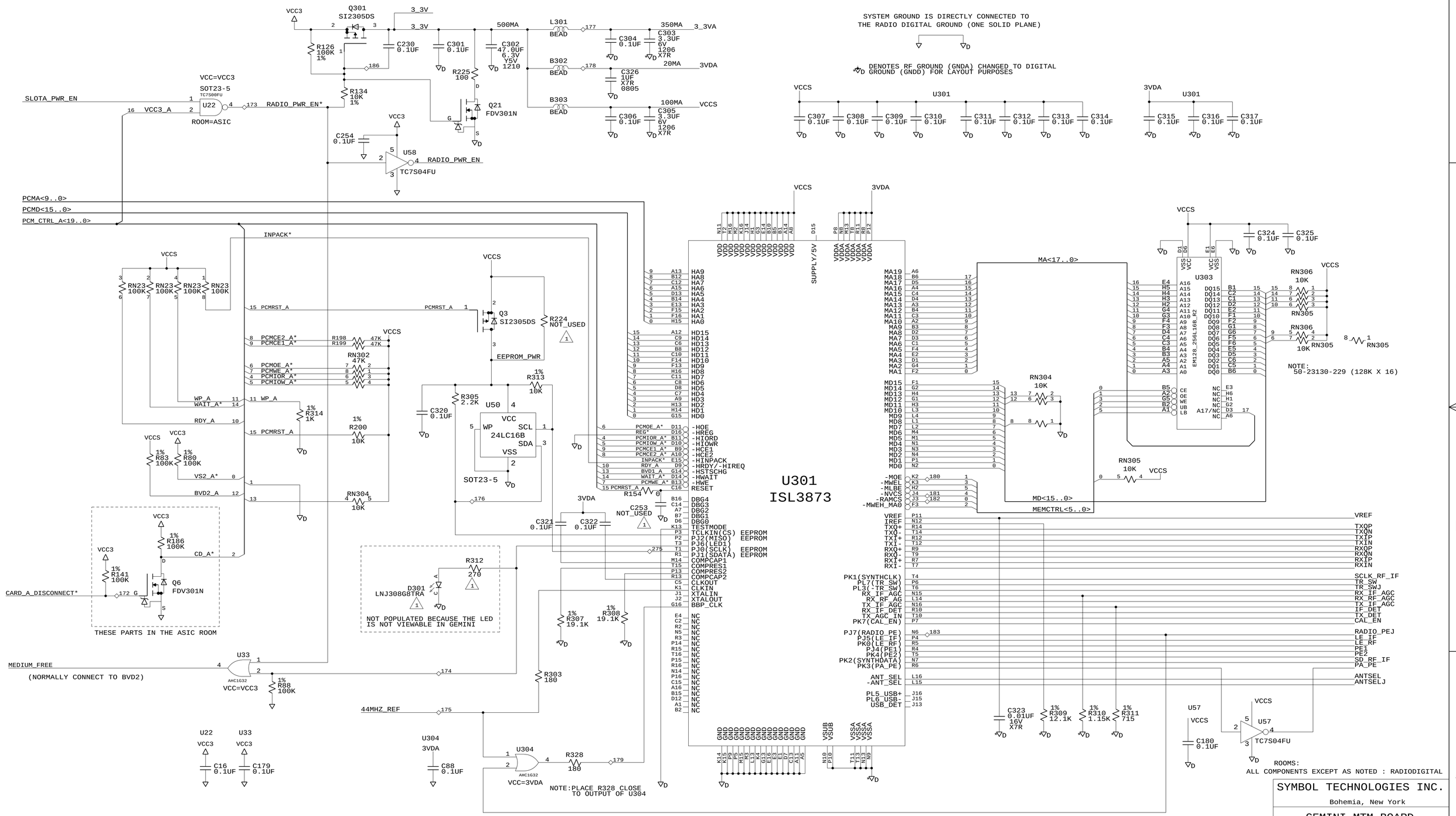

SYMBOL TECHNOLOGIES INC.
Bohemia, New York

GEMINI MTM BOARD
802.11B RADIO - BASEBAND

SIZE	DWG. NO.	REV
D	17-64436-01	A

Thu Dec 11 15:58:25 2003 SHEET 5 OF 16

REVISIONS							
REV	ZONE	NO.	DESCRIPTION	E.C.	BY	APVD.	DATE
			SEE SHEET 1				

T3-BASED 802.11B RADIO - IF

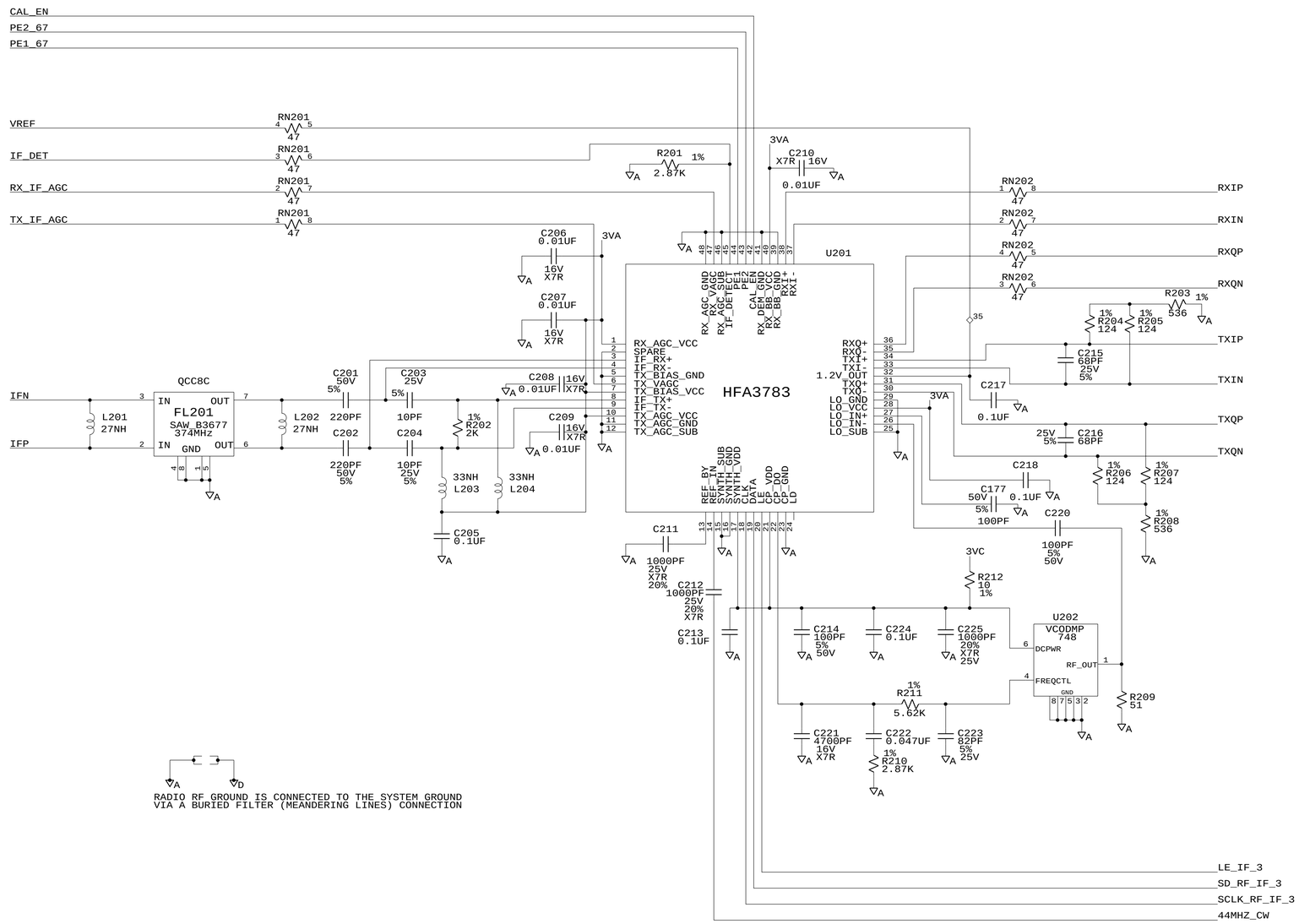

RADIO RF GROUND IS CONNECTED TO THE SYSTEM GROUND
VIA A BURIED FILTER (MEANDERING LINES) CONNECTION

ROOMS:
ALL COMPONENTS : RADIOIF

SYMBOL TECHNOLOGIES INC.
Bohemia, New York

GEMINI MTM BOARD
802.11B RADIO - IF

SIZE	DWG. NO.	REV
D	17-64436-01	A

Thu Dec 11 15:58:37 2003 | SHEET 6 OF 16

802.11B RADIO - RF

REVISIONS							
REV	ZONE	NO.	DESCRIPTION	E.C.	BY	APVD.	DATE
			SEE SHEET 1				

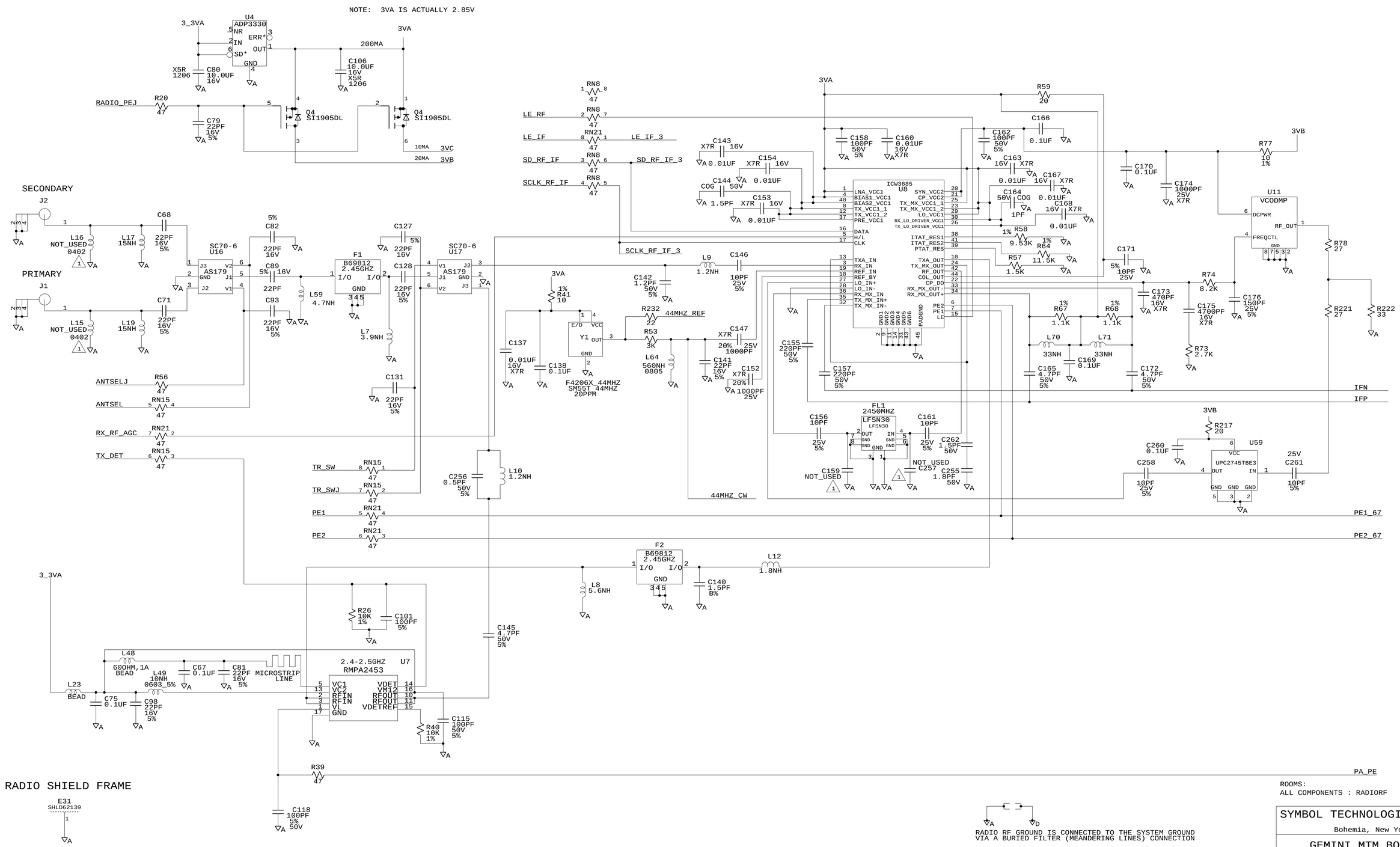

ROOMS:
ALL COMPONENTS : RADIORF

SYMBOL TECHNOLOGIES INC.
Bohemia, New York

GEMINI MTM BOARD
802.11B RADIO - RF

SIZE	DWG. NO.	REV
D	17-64436-01	A

Thu Dec 11 15:58:41 2003 SHEET 7 OF 16

REVISIONS							
REV	ZONE	NO.	DESCRIPTION	E.C.	BY	APVD.	DATE
			SEE SHEET 1				

AUDIO

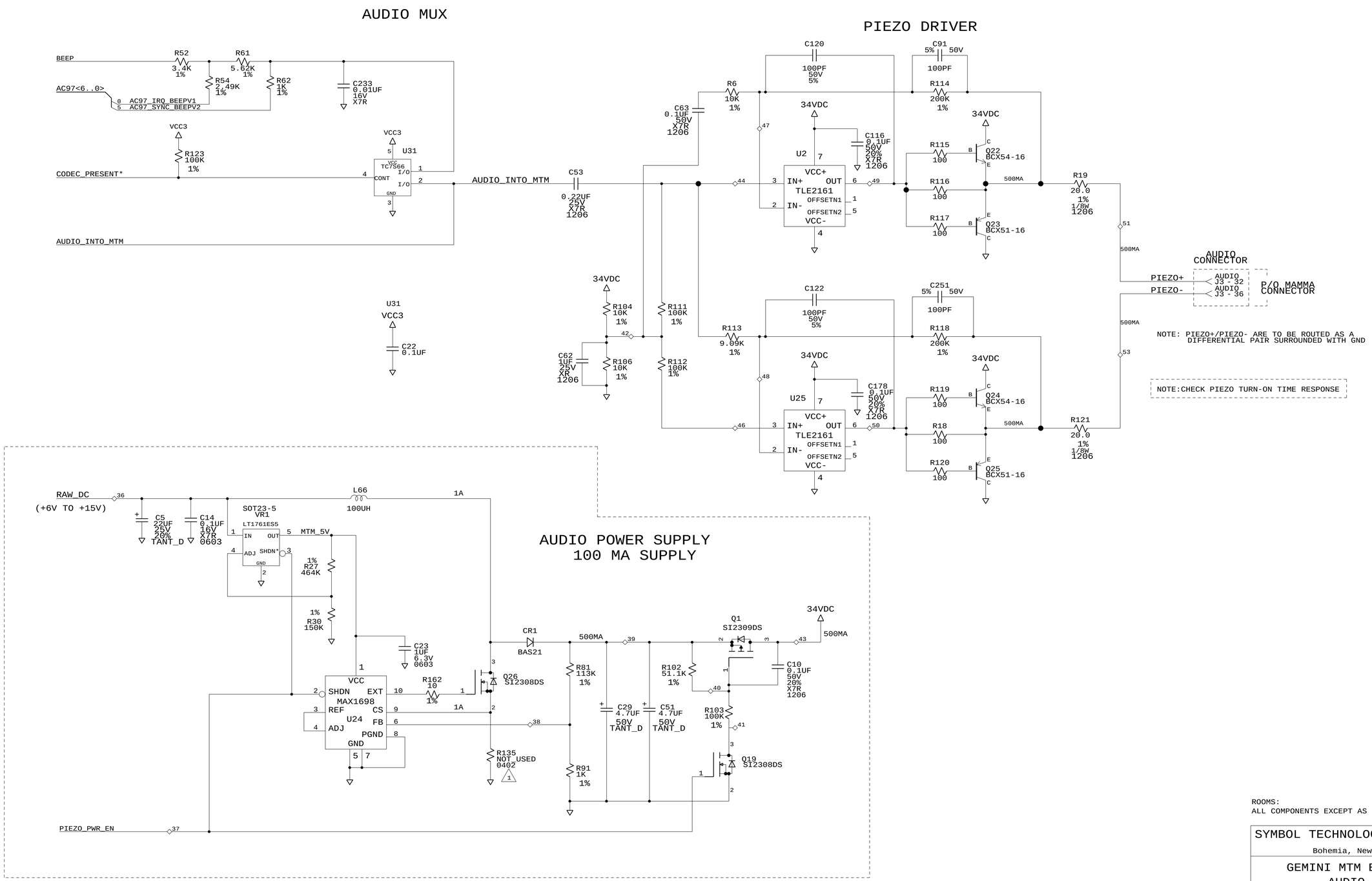

THESE COMPONENTS ARE IN THE AUDIOSUPPLY ROOM

ROOMS:
ALL COMPONENTS EXCEPT AS NOTED : AUDIO

SYMBOL TECHNOLOGIES INC.
Bohemia, New York

GEMINI MTM BOARD
AUDIO

SIZE	DWG. NO.	REV
D	17-64436-01	A

Thu Dec 11 15:58:46 2003 | SHEET 8 OF 16

REVISIONS							
REV	ZONE	NO.	DESCRIPTION	E.C.	BY	APVD.	DATE
			SEE SHEET 1				

POWER MICRO

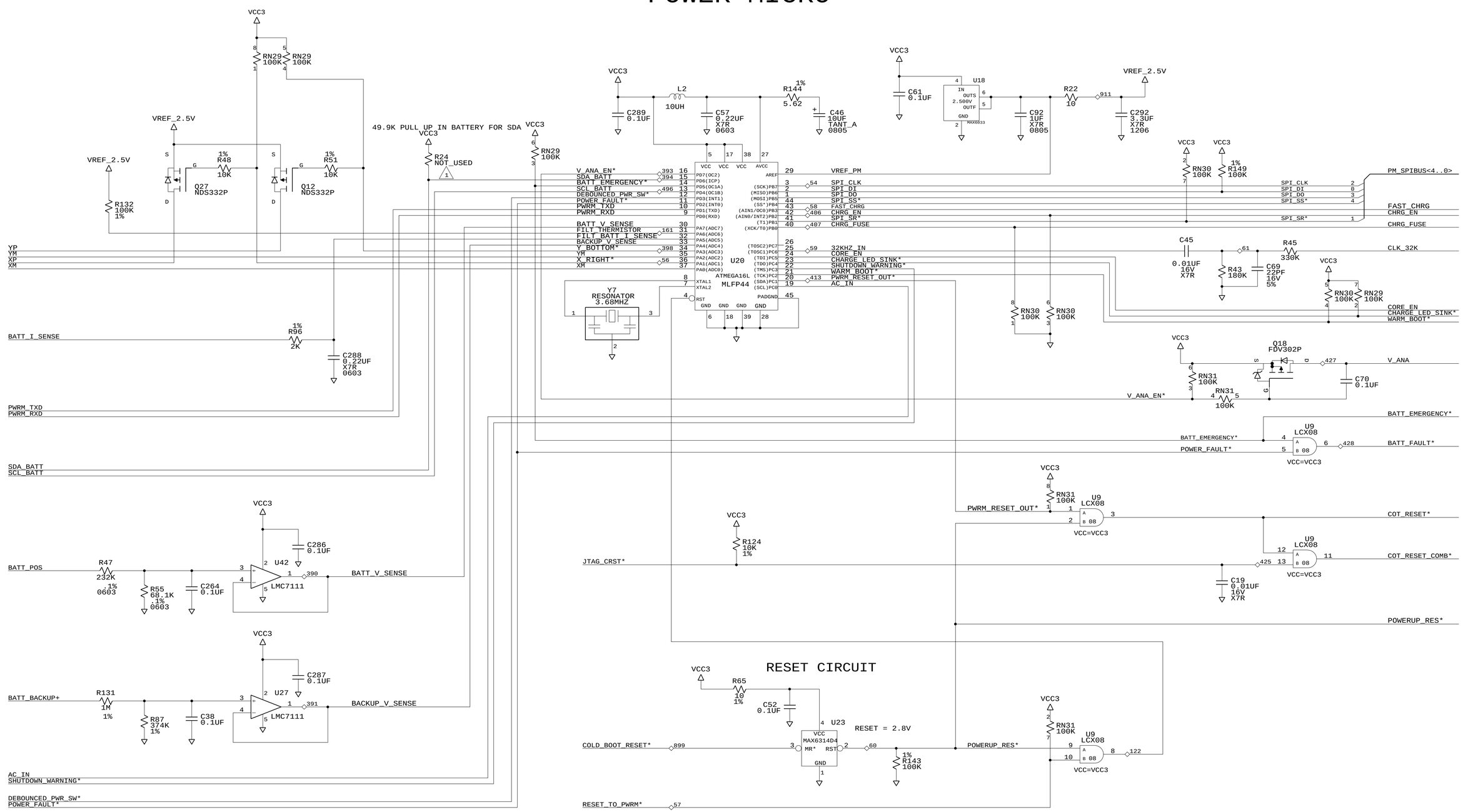

ROOMS:
ALL COMPONENTS : POWERMICRO

SYMBOL TECHNOLOGIES INC.
Bohemia, New York

GEMINI MTM BOARD
POWER MICRO

SIZE	DWG. NO.	REV
D	17-64436-01	A

Thu Dec 11 15:58:50 2003 | SHEET 9 OF 16

DISPLAY INTERFACE & OUTHOUSE CPLD

REVISIONS							
REV	ZONE	NO.	DESCRIPTION	E.C.	BY	APVD.	DATE
			SEE SHEET 1				

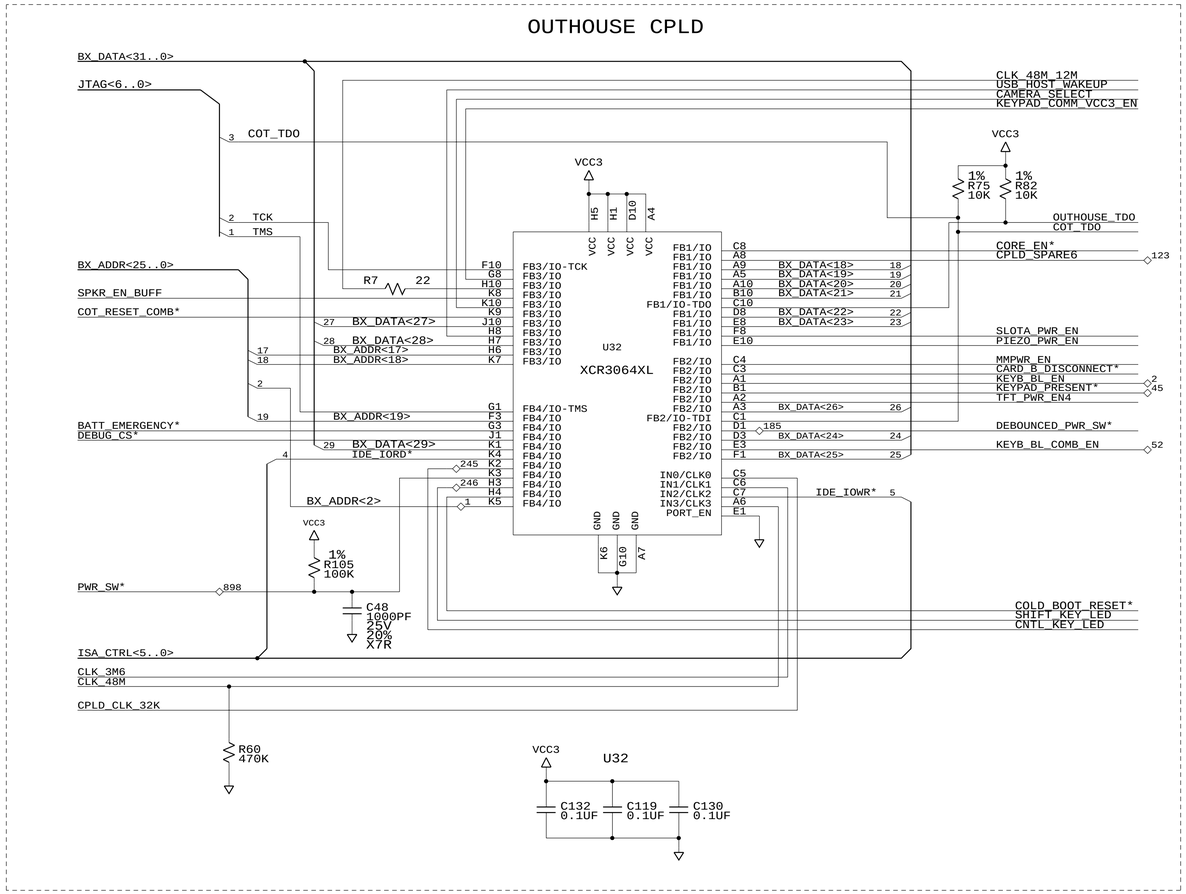

THESE COMPONENTS ARE IN THE CPLD ROOM

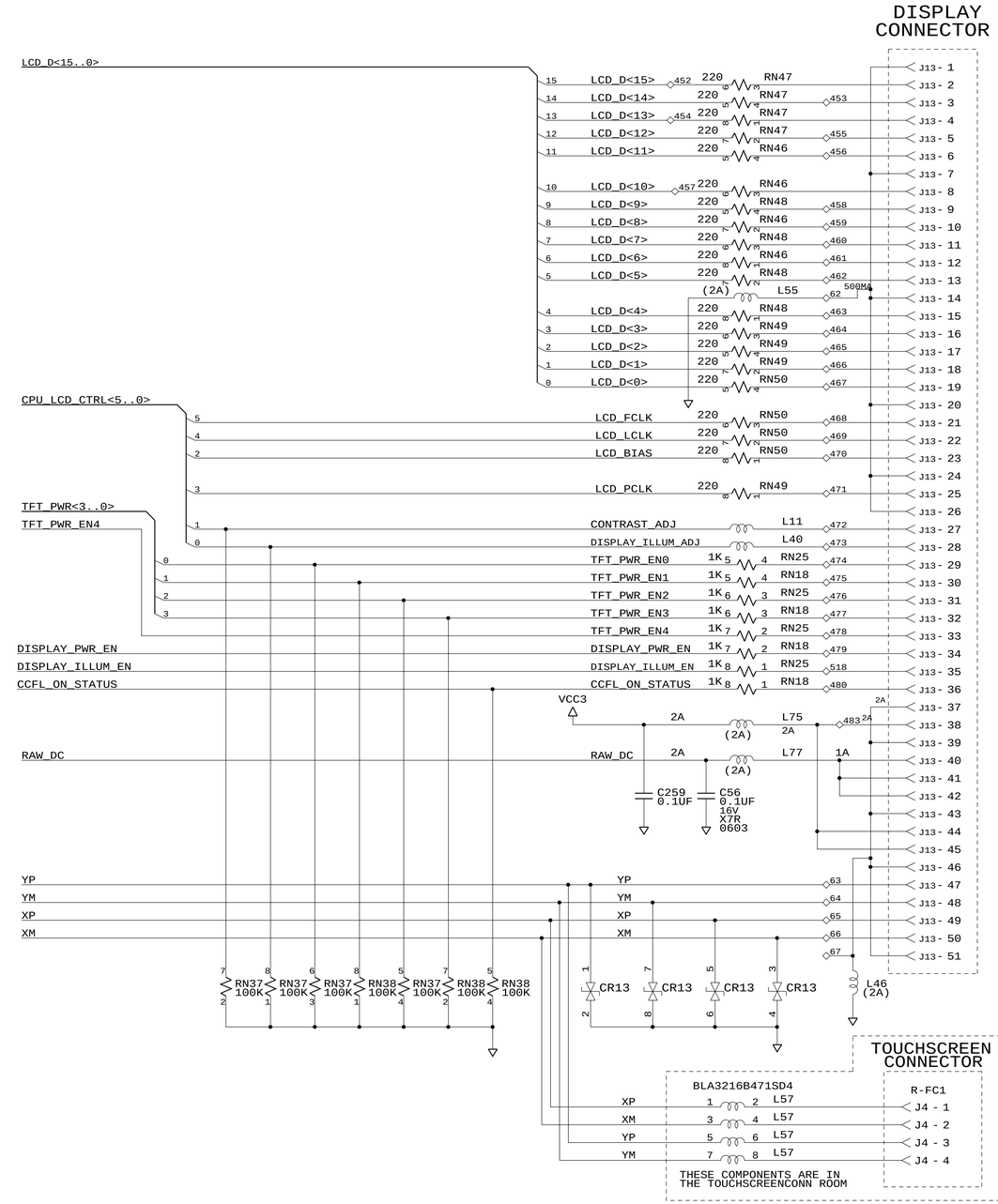

CPLD SIGNAL MAPPING

BX_DATA	SIGNAL (ALL OUTPUTS OR INTERNAL)	
29	USB_HOST_WAKEUP	
28	SHIFT_KEY_LED	
27	CNTL_KEY_LED	
26	CAMERA_SELECT	
25	KEYPAD_COMM_VCC3_EN	
24	AUDIO_DURING_SUSPEND	(INTERNAL TO CPLD)
23	SLOTA_PWR_EN	
22	ASIC_CLK_SEL	(INTERNAL TO CPLD)
21	MMPWR_EN*	
20	PIEZO_PWR_EN	
19	CARD_B_DISCONNECT*	
18	TFT_PWR_EN4	

ROOMS:
ALL COMPONENTS EXCEPT AS NOTED : DISPLAYCONN

SYMBOL TECHNOLOGIES INC.
Bohemia, New York

GEMINI MTM BOARD
DISPLAY & COMMUNICATIONS

SIZE	DWG. NO.	REV
D	17-64436-01	A

Thu Dec 11 15:57:36 2003 | SHEET 10 OF 16

REVISIONS							
REV	ZONE	NO.	DESCRIPTION	E.C.	BY	APVD.	DATE
			SEE SHEET 1				

SCANNER & IMAGER INTERFACES

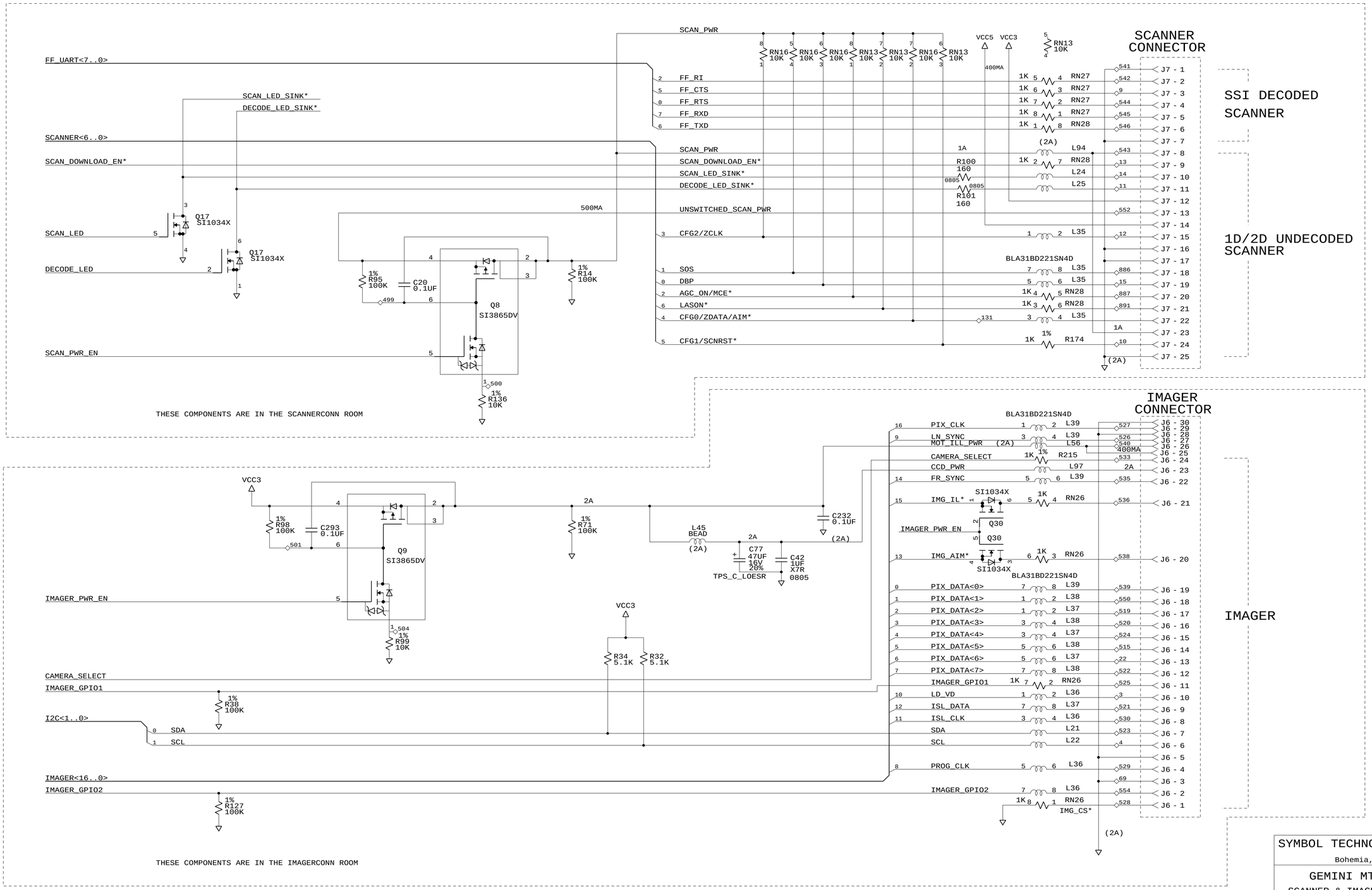

SYMBOL TECHNOLOGIES INC.	Bohemia, New York
GEMINI MTM BOARD	SCANNER & IMAGER INTERFACES
SIZE D	DWG. NO. 17-64436-01	REV A
Thu Dec 11 15:57:42 2003	SHEET 11 OF 16

SD/MMC, COMMUNICATION & TRIGGER INTERFACES

REVISIONS							
REV	ZONE	NO.	DESCRIPTION	E.C.	BY	APVD.	DATE
			SEE SHEET 1				

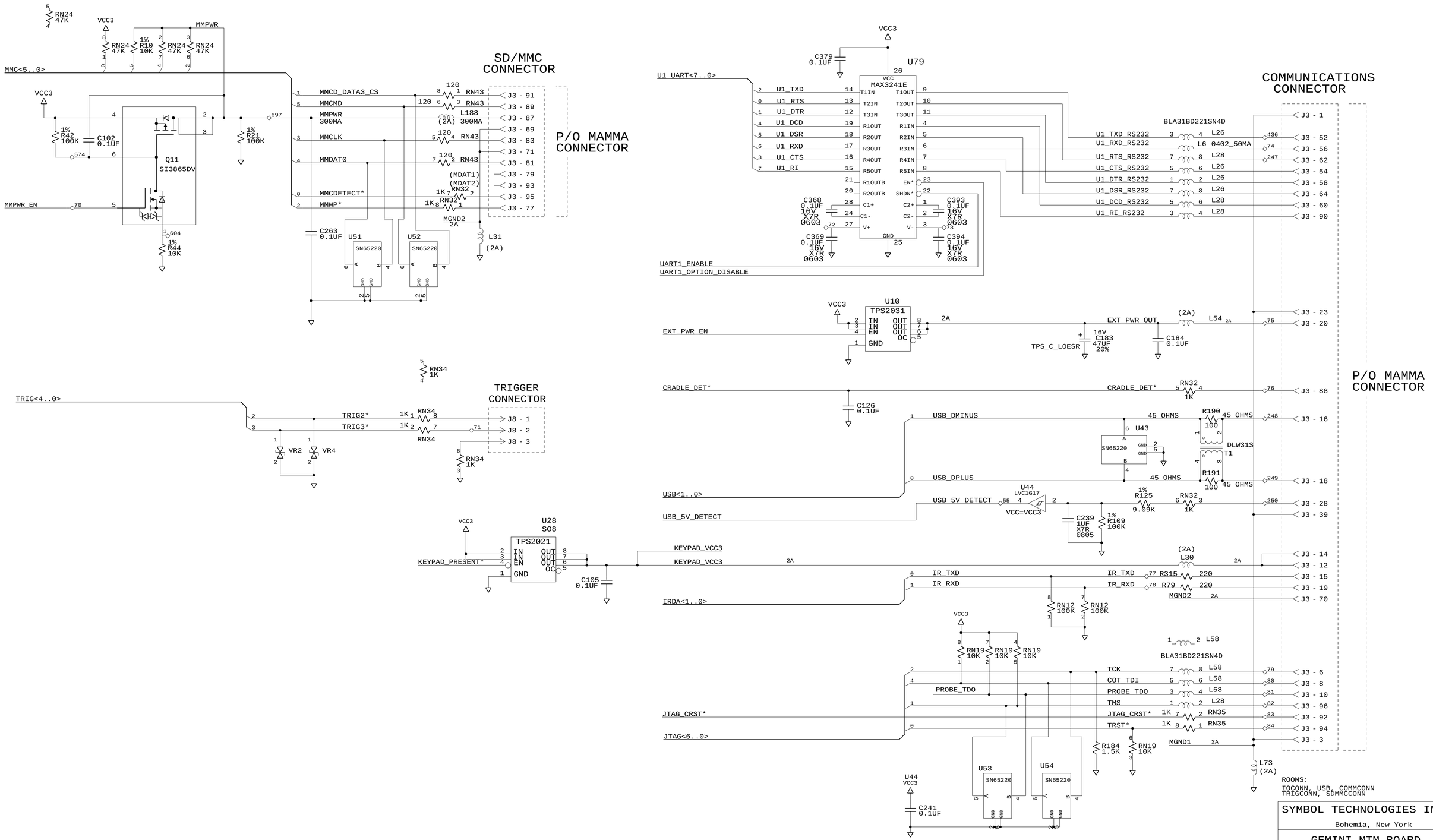

SYMBOL TECHNOLOGIES INC.
Bohemia, New York

GEMINI MTM BOARD
SD/MMC, COMM & TRIG INTERFACES

SIZE	DWG. NO.	REV
D	17-64436-01	A

Thu Dec 11 15:57:46 2003 | SHEET 12 OF 16

USER INTERFACES

REVISIONS							
REV	ZONE	NO.	DESCRIPTION	E.C.	BY	APVD.	DATE
			SEE SHEET 1				

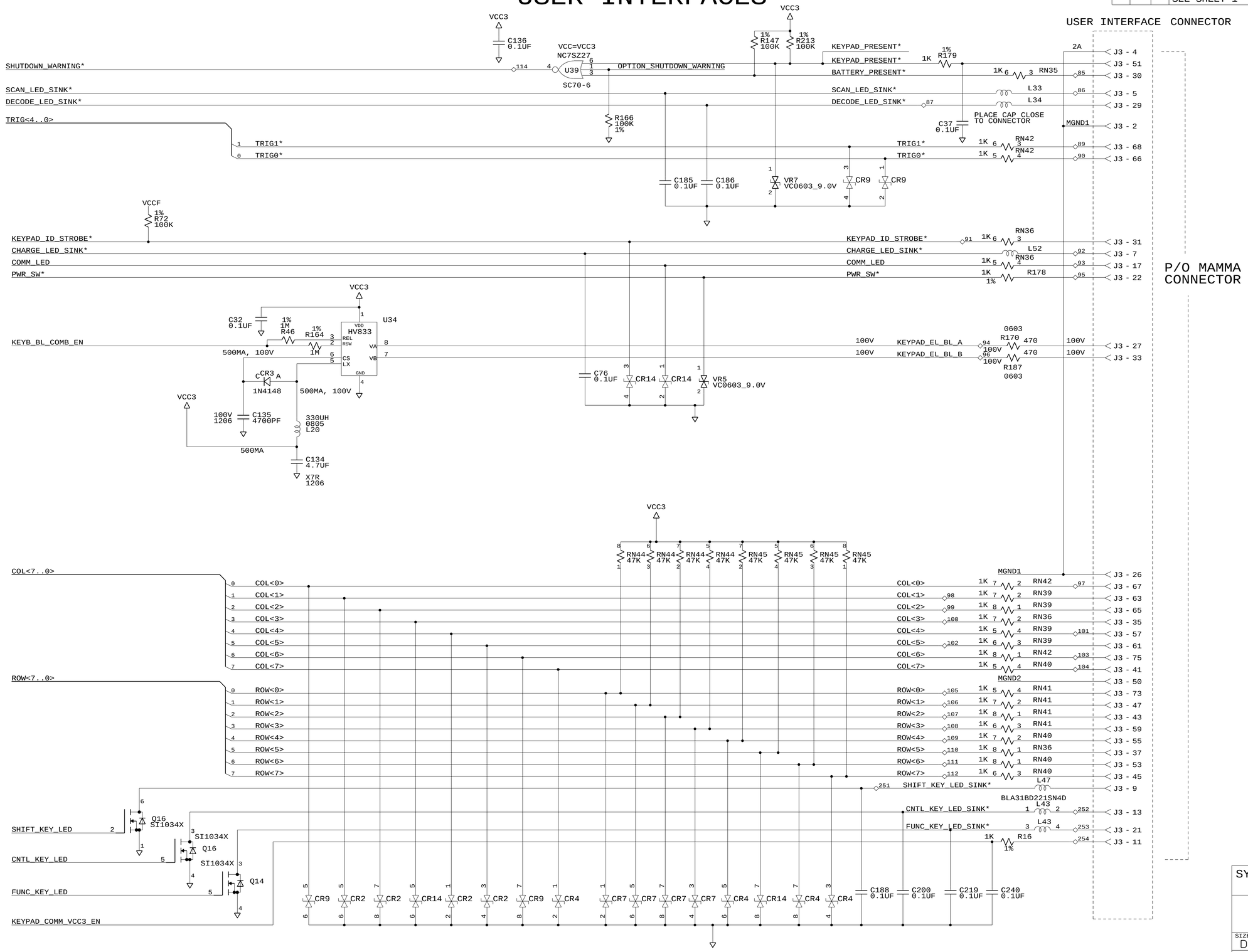

SYMBOL TECHNOLOGIES INC.
Bohemia, New York

GEMINI MTM BOARD
USER INTERFACE

SIZE	DWG. NO.	REV
D	17-64436-01	A

Thu Dec 11 15:57:51 2003 SHEET 13 OF 16

POWER, BATTERY CHARGER & POWER SUPPLIES

REVISIONS							
REV	ZONE	NO.	DESCRIPTION	E.C.	BY	APVD.	DATE
			SEE SHEET 1				

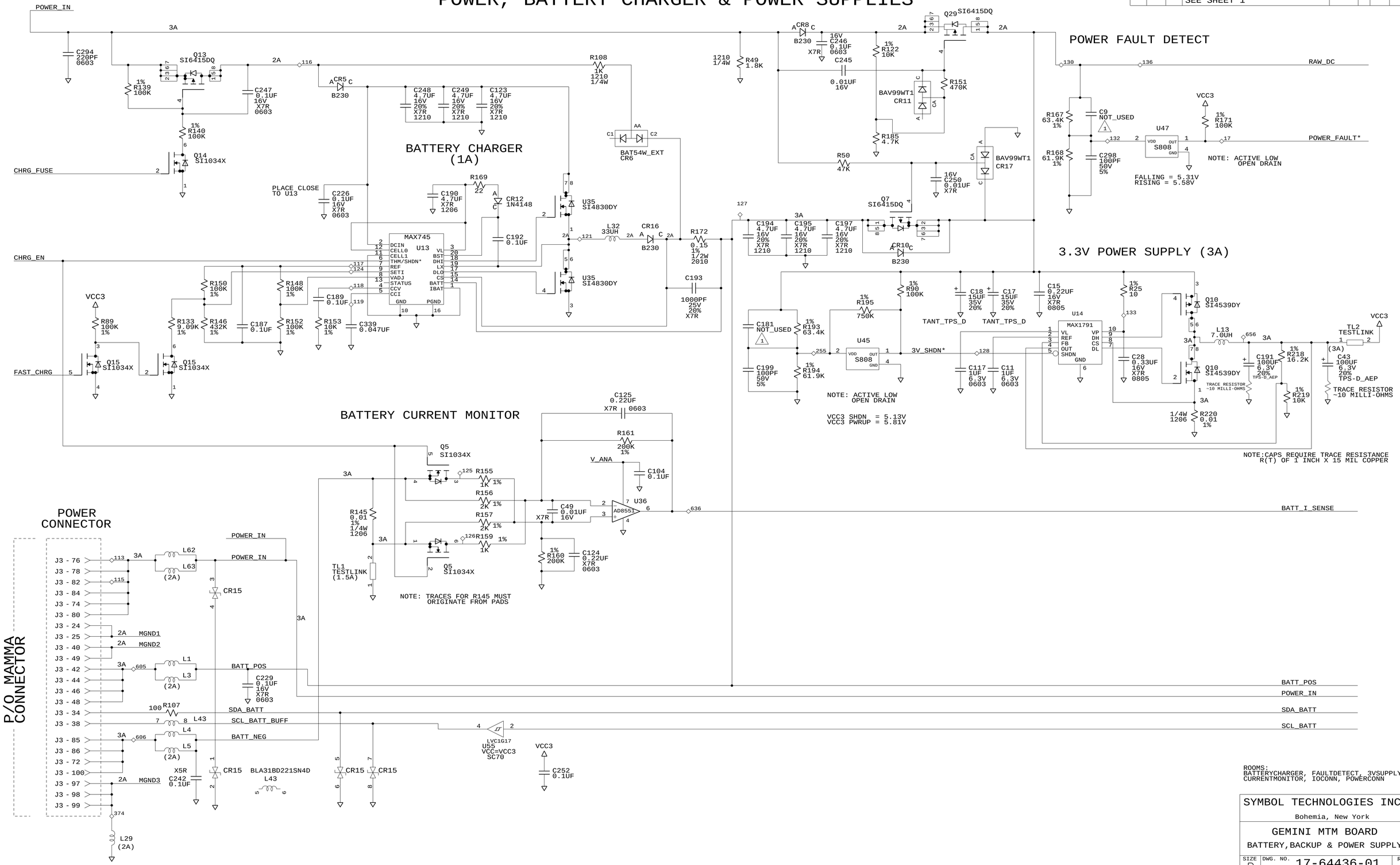

ROOMS:
BATTERYCHARGER, FAULTDETECT, 3VSUPPLY
CURRENTMONITOR, IOCONN, POWERCONN

SYMBOL TECHNOLOGIES INC.
Bohemia, New York

GEMINI MTM BOARD
BATTERY,BACKUP & POWER SUPPLY

SIZE	DWG. NO.	REV
D	17-64436-01	A

Thu Dec 11 15:57:57 2003 | SHEET 14 OF 16

REVISIONS							
REV	ZONE	NO.	DESCRIPTION	E.C.	BY	APVD.	DATE
			SEE SHEET 1				

CORE POWER SUPPLY

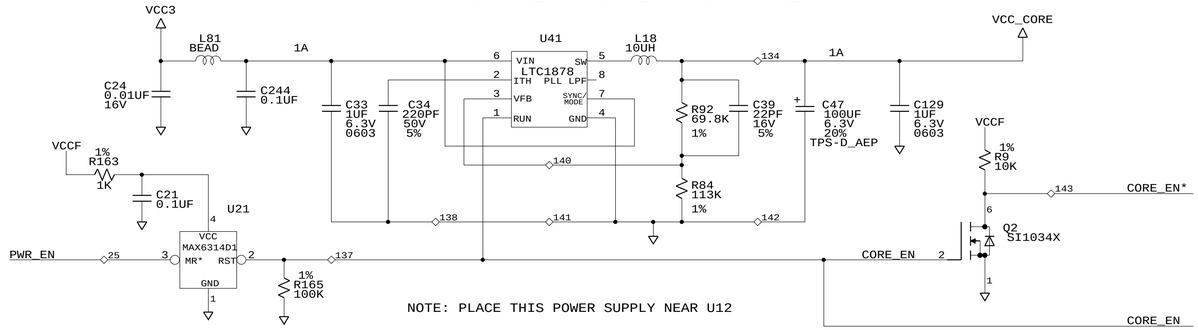

THESE COMPONENTS ARE IN THE HISPEED ROOM

XSCALE
CORE POWER SUPPLY VOLTAGE
SELECTION MATRIX

VERSION	TEMP	FREQUENCY	VCC_CORE	R84	R92
PXA255A0	EXT'ND	400MHZ	1.3V	113K	69.8K (DEFAULT)

3-CELL NIMH BATTERY BACKUP

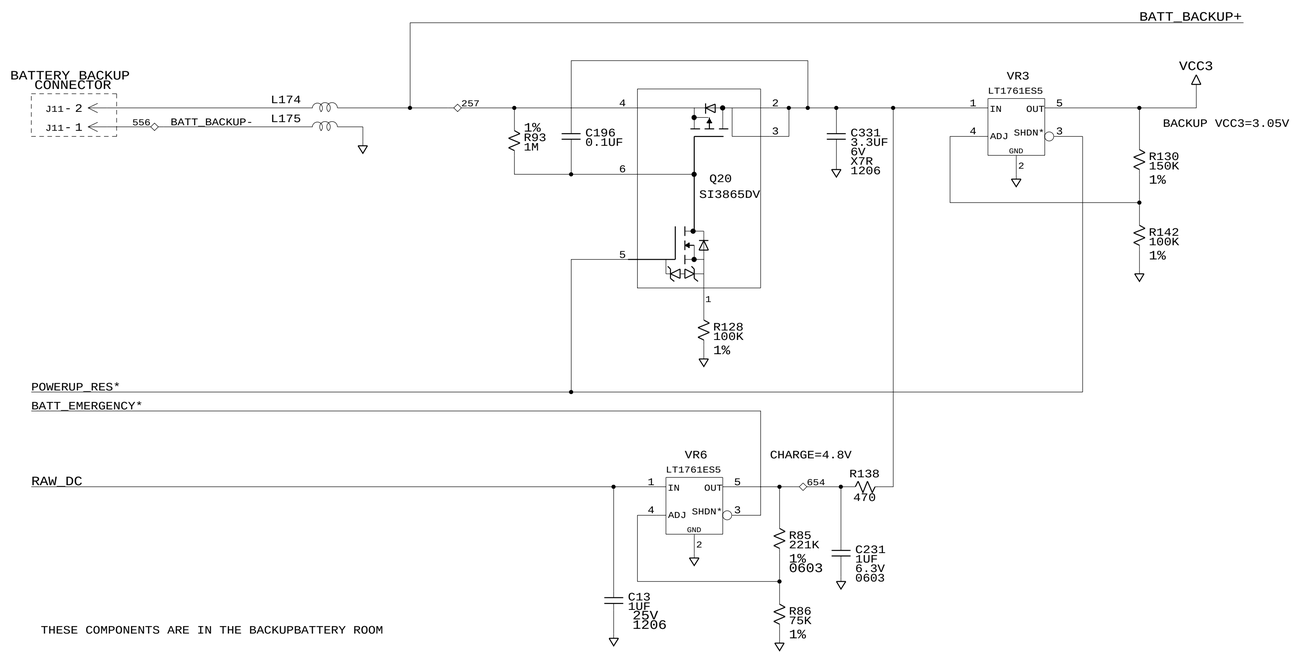

THESE COMPONENTS ARE IN THE BACKUPBATTERY ROOM

VOLTAGE AND FREQUENCY SPECIFICATIONS
TURBO MODE FREQUENCY (MHZ) VCC (VOLTS)

MIN	MAX	MIN	TYP	MAX
99.5	118.0	0.95	1.0	1.155
99.5	199.1	0.95	1.0	1.32
99.5	298.7	1.045	1.1	1.43
99.5	398.2	1.235	1.3	1.65

TERMINATIONS

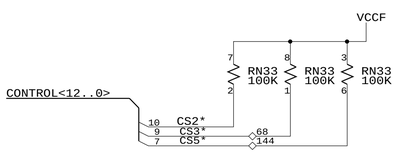

ACIN DETECT

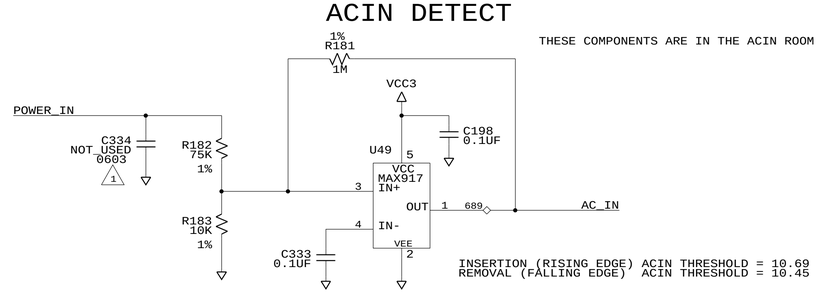

THESE COMPONENTS ARE IN THE ACIN ROOM

INSERTION (RISING EDGE) ACIN THRESHOLD = 10.69
REMOVAL (FALLING EDGE) ACIN THRESHOLD = 10.45

SYMBOL TECHNOLOGIES INC.
Bohemia, New York

GEMINI MTM BOARD
CORE SUPPLY,BACKUP BATTERY & ACIN

SIZE	DWG. NO.	REV
D	17-64436-01	A

Thu Dec 11 15:58:00 2003 | SHEET 15 OF 16

REVISIONS							
REV	ZONE	NO.	DESCRIPTION	E.C.	BY	APVD.	DATE
			SEE SHEET 1				

MTM TO OPTION BOARD INTERFACE

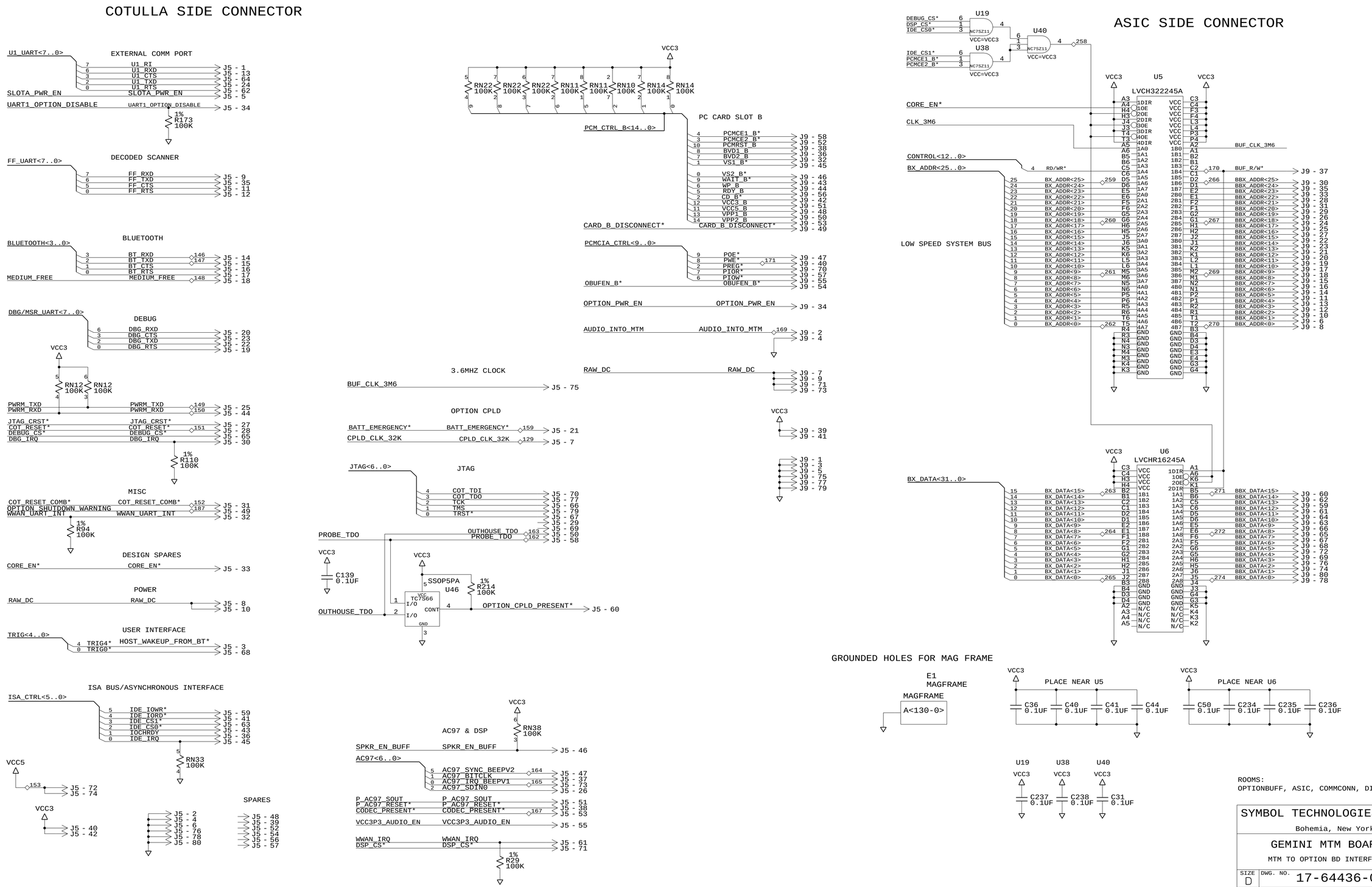

ROOMS:
OPTIONBUFF, ASIC, COMMCONN, DISPLAYCONN

SYMBOL TECHNOLOGIES INC.
Bohemia, New York

GEMINI MTM BOARD
MTM TO OPTION BD INTERFACE

SIZE	DWG. NO.	REV
D	17-64436-01	A

Thu Dec 11 15:58:06 2003 | SHEET 16 OF 16

GEMINI SHORT MAIN FLEX

REVISIONS							
REV	ZONE	NO.	DESCRIPTION	E.C.	BY	APVD.	DATE
A			RELEASE PER EDR72497		KJR	RK	12/5/2003

BOM TABLE (DNI=Do Not Install)

Reference Designator	Build 01
J12	DNI
J13	DNI
J5	DNI
R4	DNI
R6	DNI
R7	DNI

ITEM	QTY.	PART NO.	DESCRIPTION	REMARKS/REF.SYMBOL

PARTS LIST

NEXT ASSY	USED ON

THE DWG. AND SPECIFICATION CONTAINED HEREON ARE PROPRIETARY AND MUST NOT BE USED, COPIED, REPRODUCED OR OTHERWISE DEALT WITH NOR ITS CONTENTS COMMUNICATED TO OTHERS EXCEPT IN ACCORDANCE WITH WRITTEN INSTRUCTIONS RECEIVED FROM SYMBOL TECHNOLOGIES INC.

DO NOT SCALE DRAWING

DIMENSIONS ARE IN INCHES

UNLESS OTHERWISE SPECIFIED

	MM	INCH
.XX	±	± .01
.XXX	±	± .005

ANGLES ± 1° FRACTIONS ± 1/64

MATERIAL:

FINISH:

APPROVALS		DATE
DRAWN	K. RIVALSI	12/5/03
CHECKED		
ENGINEER	K. RIVALSI	12/5/03
MFG. ENG.		
PRODUCT		
QUALITY		
TEST ENG.		

SYMBOL TECHNOLOGIES INC.

Bohemia, New York

GEMINI SHORT MAIN FLEX SCHEMATIC

SIZE	DWG. NO.	REV
D	17-63293-01	A

Wed Dec 17 09:35:11 2003

SHEET 1 OF 2

REVISIONS							
REV	ZONE	NO.	DESCRIPTION	E.C.	BY	APVD.	DATE
			SEE SHEET 1				

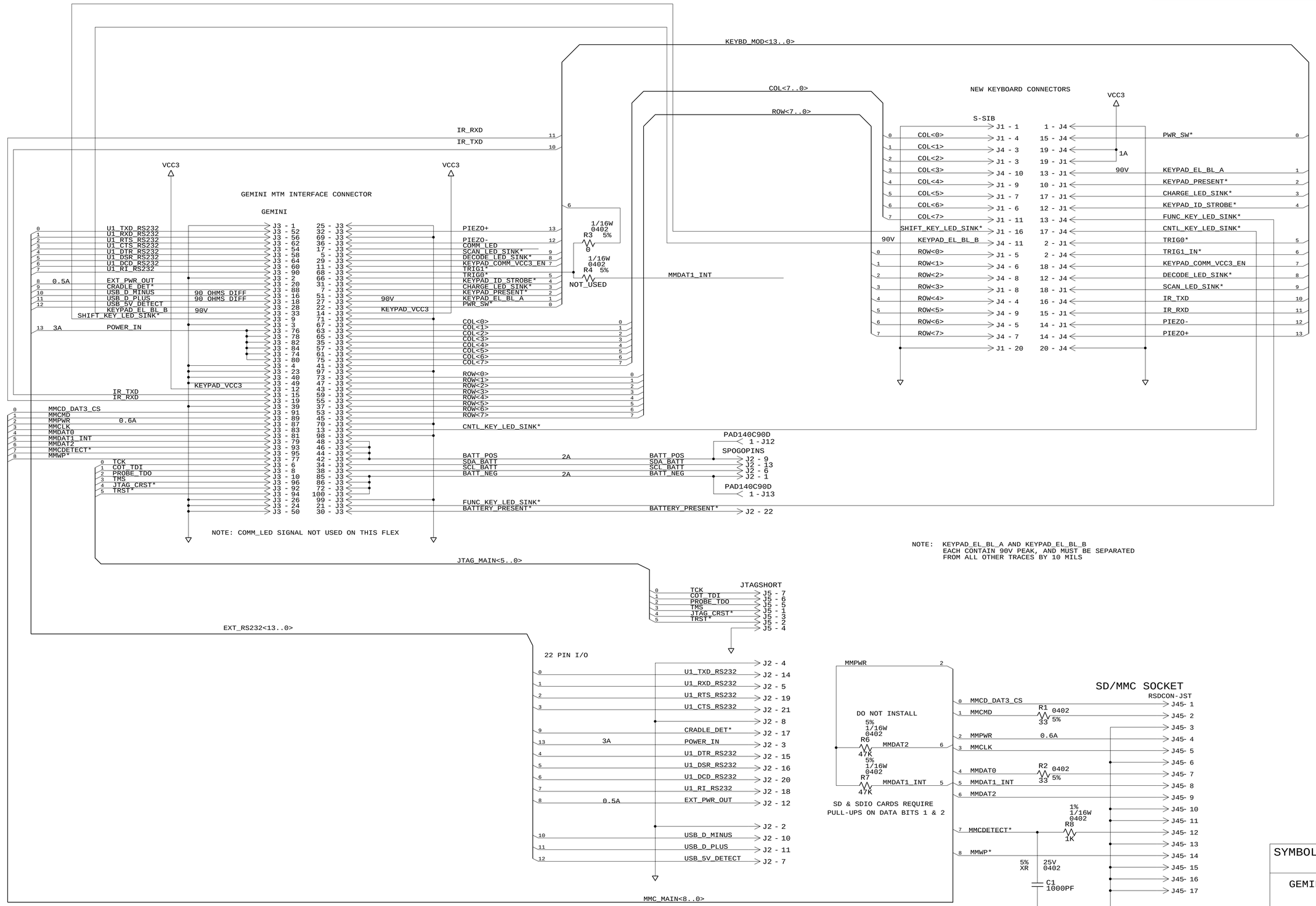

SYMBOL TECHNOLOGIES INC.

Bohemia, New York

GEMINI SHORT MAIN FLEX SCHEMATIC

SIZE	DWG. NO.	REV
D	17-63293-01	A

Wed Dec 17 09:35:55 2003 | SHEET 2 OF 2

REVISIONS							
REV	ZONE	NO.	DESCRIPTION	E.C.	BY	APVD.	DATE
1			RELEASE PER PPD#78050		KEK	RK	12/02/03
A			RELEASE PER EDR#72926		KEK	RK	02/13/04

GEMINI BRICK TRIGGER BOARD

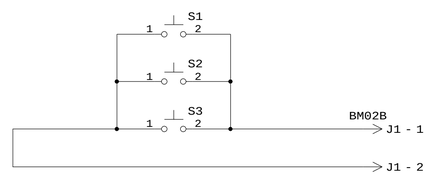

CREATED FROM 17-63945-01 REV A

CHANGED FROM SINGLE MECHANICAL SWITCH TO THREE SNAP DOMES
TO IMPROVE FEEL ON LONG TRIGGER BUTTON

CHANGES FROM REV 1 TO REV A

RELEASED WITH NO CHANGES

NEXT ASSY	USED ON

THE DWG. AND SPECIFICATION CONTAINED HEREON ARE PROPRIETARY AND MUST NOT BE USED, COPIED, REPRODUCED OR OTHERWISE DEALT WITH NOR ITS CONTENTS COMMUNICATED TO OTHERS EXCEPT IN ACCORDANCE WITH WRITTEN INSTRUCTIONS RECEIVED FROM SYMBOL TECHNOLOGIES INC.

DO NOT SCALE DRAWING

DIMENSIONS ARE IN INCHES
UNLESS OTHERWISE SPECIFIED

		MM	INCH
.XX	±		± .01
.XXX	±		± .005

ANGLES ± 1° FRACTIONS ± 1/64

MATERIAL:

FINISH:

APPROVALS	DATE
DRAWN K. KEPPELER	11/20/03
CHECKED R. KOTSAY	11/20/03
ENGINEER K. KEPPELER	11/20/03
MFG. ENG. P. IASSO	11/20/03
PRODUCT G. STILL	11/20/03
QUALITY	
TEST ENG.	

SYMBOL TECHNOLOGIES INC.
Bohemia, New York

GEMINI BRICK
TRIGGER BOARD

SIZE D | DWG. NO. 17-66336-01 | REV A

Fri Feb 13 17:46:02 2004 | SHEET 1 OF 1

ITEM	QTY.	PART NO.	DESCRIPTION	REMARKS/REF.SYMBOL

PARTS LIST

REVISIONS							
REV	ZONE	NO.	DESCRIPTION	E.C.	BY	APVD.	DATE
2			RELEASE PER PPD #72457				
3			RELEASE PER PPD #73159				
4			RELEASE PER PPD #73343				
A			RELEASE PER EDR #70318		TB	TB	2/12/03

MOTOR DRIVE

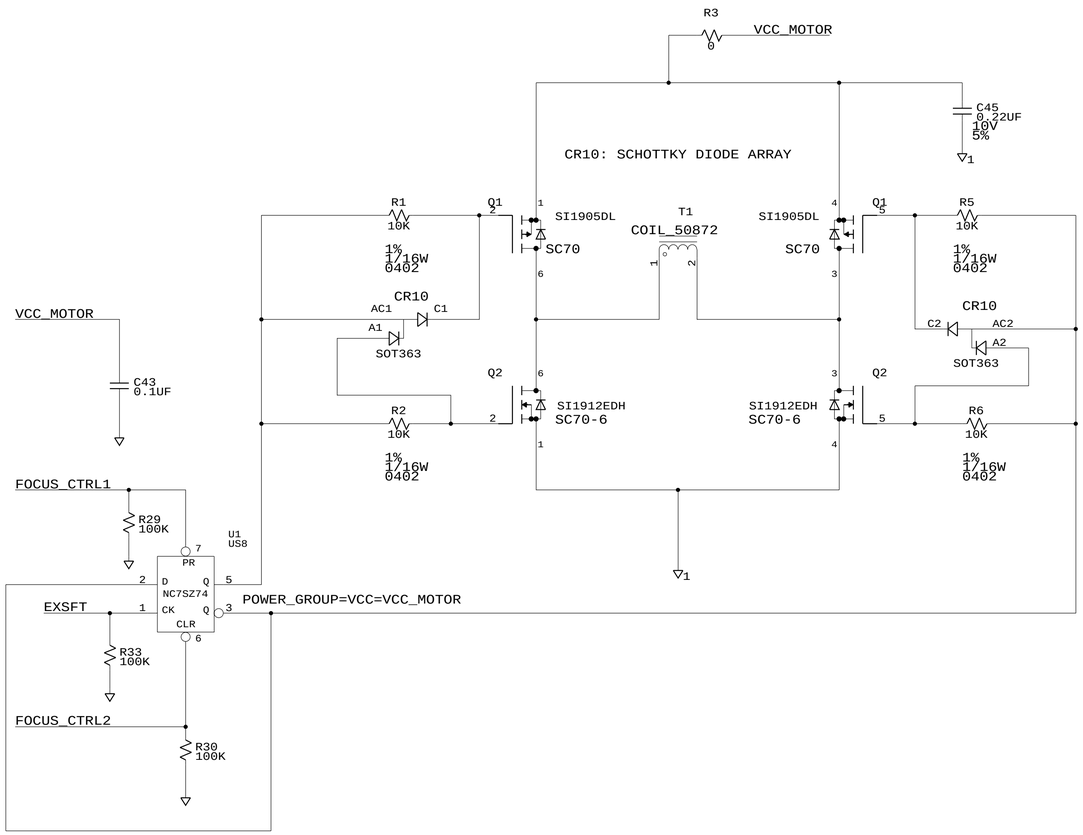

LASER DRIVE

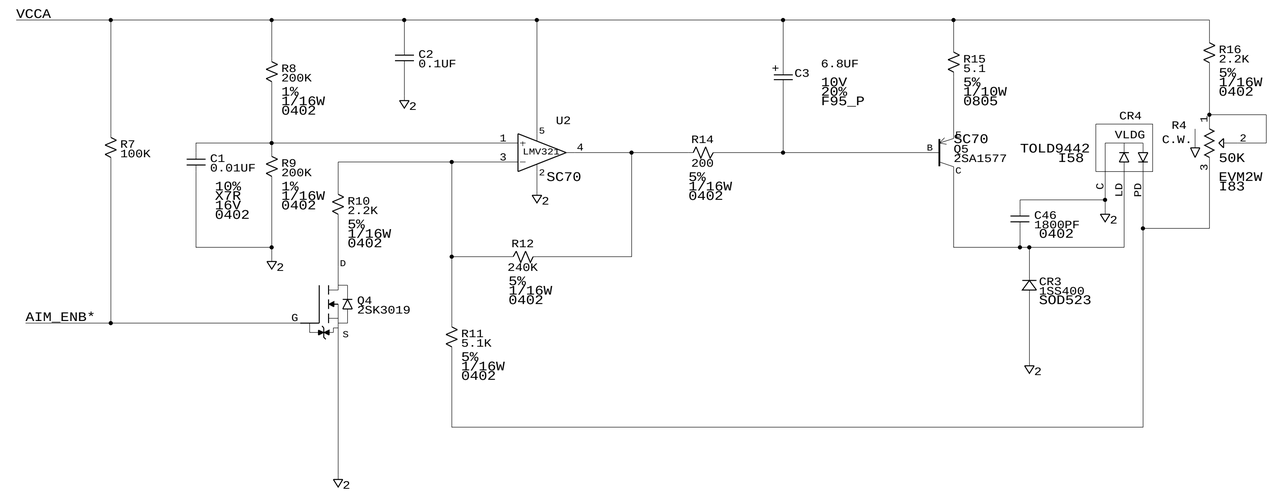

ILLUMINATION DRIVE

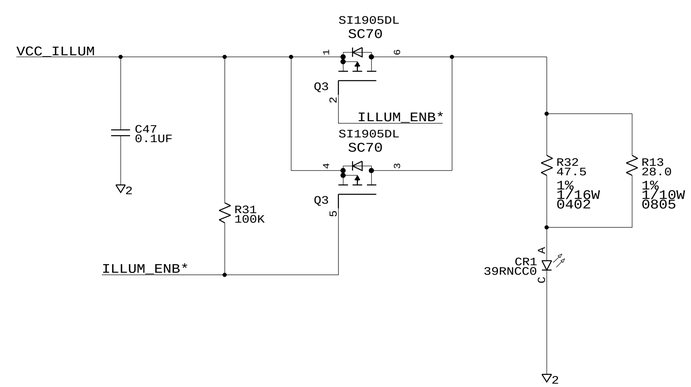

NOTES:

1. ALL RESISTORS ARE 5%, 0402, 1/16W UNLESS STATED OTHERWISE.
2. ALL CAPACITORS ARE X5R OR X7R, 0402, 10% UNLESS STATED OTHERWISE.

REVISION HISTORY:

REV. 2:

A) REMOVED DIODE FROM Q5-B TO GROUND.
B) ADDED 1800PF ACROSS LD.
C) ADDED CAP ACROSS H-BRIDGE.

REV. 3:

A) ADJUST LED R TO 19OHMS
B) CHANGE R1, R2, R5, R6 TO 10K
C) VLD, R16 MADE 2.2K
D) R24 MADE 10K

REV. 4:

A) CONNECTED U1 & C43 TO VCC_MOTOR
B) REMOVED R28
C) CHANGED C15 TO 0.01UF

REV. A:

A) CHANGED R8 & R9 TO 200KOHMS.
B) CHANGED C1 TO 0.01UF.
C) CHANGED R32 TO 47.5OHMS.
D) MAKE R25 & R26 DNP.

ITEM	QTY.	PART NO.	DESCRIPTION	REMARKS/REF.SYMBOL

PARTS LIST

NEXT ASSY	USED ON

THE DWG. AND SPECIFICATION CONTAINED HEREON ARE PROPRIETARY AND MUST NOT BE USED, COPIED, REPRODUCED OR OTHERWISE DEALT WITH NOR ITS CONTENTS COMMUNICATED TO OTHERS EXCEPT IN ACCORDANCE WITH WRITTEN INSTRUCTIONS RECEIVED FROM SYMBOL TECHNOLOGIES INC.

DO NOT SCALE DRAWING

DIMENSIONS ARE IN INCHES UNLESS OTHERWISE SPECIFIED

	MM	INCH
.XX	±	± .01
.XXX	±	± .005

ANGLES ± 1° FRACTIONS ± 1/64

MATERIAL:

FINISH:

APPROVALS	DATE
DRAWN T. BIANCULLI	
CHECKED	
ENGINEER T. BIANCULLI	
MFG. ENG.	
PRODUCT	
QUALITY	
TEST ENG.	

SYMBOL TECHNOLOGIES INC.
Bohemia, New York

PROTON SIZED
2D CCD IMAGER

SIZE	DWG. NO.	REV
D	17-59440-01	A

Tue Feb 18 10:50:46 2003 SHEET 1 OF 2

REVISIONS							
REV	ZONE	NO.	DESCRIPTION	E.C.	BY	APVD.	DATE
			SEE SHEET 1				

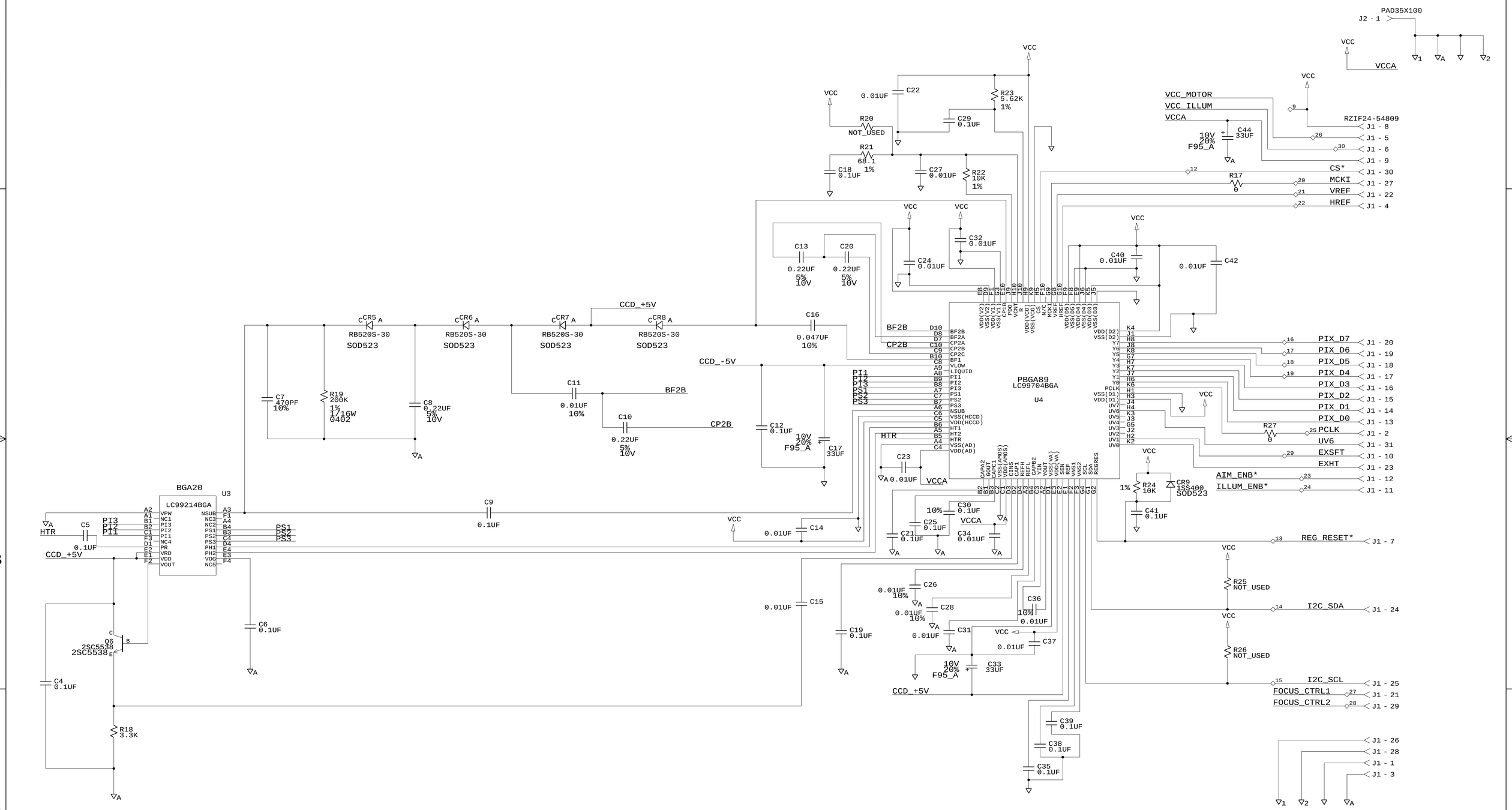

SYMBOL TECHNOLOGIES INC.
Bohemia, New York

PROTON SIZED
2D CCD IMAGER

SIZE	DWG. NO.	REV
D	17-59440-01	A

Wed Feb 12 14:03:14 2003 | SHEET 2 OF 2

REVISIONS							
REV	ZONE	NO.	DESCRIPTION	E.C.	BY	APVD.	DATE
1			RELEASE PER PPD # 76793		DL	RK	08/22/03
2			RELEASE PER PPD # 77136		DL	RK	09/19/03
3			RELEASE PER PPD # 77859		DL	RK	11/17/03
4			RELEASE PER PPD # 78799		DL	RK	02/17/04

GEMINI
BRICK OPTION BOARD II
DUAL RADIO VERSION
REV: 4

STILL NEEDS AVX SUPERCAP FOOTPRINT

TABLE OF CONTENTS

PAGE 1: THIS COVER PAGE
PAGE 2: DSP
PAGE 3: CODEC AND AUDIO
PAGE 4: CPLD AND POWER SUPPLIES
PAGE 5: MICROPHONE PREAMPLIFIERS
PAGE 6: BLUETOOTH RADIO
PAGE 7: WAN RADIO INTERFACE
PAGE 8: CONNECTIONS TO MAIN TERMINAL MODULE

VARIANTS:

24-64188-01: SNAPPER BT RADIO, DSP
24-64188-02: MARLIN BT RADIO, DSP
24-64188-03: MARLIN BT RADIO, NO DSP
24-64188-04: NO BT RADIO, DSP
24-64188-05: NO BT RADIO, NO DSP

CLOCKS:

SHEET 2: 20MHZ DSP XTAL
SHEET 3: 24.576MHZ CODEC XTAL
SHEET 3: 12.288MHZ AC97 CLOCK
SHEET 4: 3.6864MHZ FROM MTM
SHEET 4: 32.768KHZ FROM MTM
SHEET 4: 1.2MHZ LT1761 BUCK REGULATORS

BOM TABLE (DNI=Do Not Install)

Reference Designator	Build 03	Build 05	Build 04	Build 01	Build 02
C102	DNI	DNI	DNI	DNI	DNI
C107	DNI	DNI	DNI	DNI	DNI
C116	DNI	DNI	DNI	DNI	DNI
C117	DNI	DNI	DNI	DNI	DNI
C118	DNI	DNI	DNI	DNI	DNI
C119	DNI	DNI	DNI	DNI	DNI
C129	DNI	DNI	DNI	DNI	DNI
C161	DNI	DNI	-	-	-
C164	DNI	DNI	-	-	-
C170	DNI	DNI	-	-	-
C214	-	DNI	DNI	-	-
C29	DNI	DNI	-	-	-
C307	-	DNI	DNI	-	-
C308	-	DNI	DNI	-	-
C309	-	DNI	DNI	-	-
C400	-	DNI	DNI	-	-
C58	DNI	DNI	-	-	-
C6	DNI	DNI	DNI	DNI	DNI
C61	DNI	DNI	-	-	-
C62	DNI	DNI	-	-	-
C63	DNI	DNI	-	-	-
C64	DNI	DNI	-	-	-
C65	DNI	DNI	-	-	-
C66	DNI	DNI	-	-	-
C67	DNI	DNI	-	-	-
C68	DNI	DNI	-	-	-
C71	-	DNI	DNI	-	-
C72	-	DNI	DNI	-	-
F1	-	DNI	DNI	-	-
J4	-	DNI	DNI	-	-
X5	-	DNI	DNI	-	-
Q1	DNI	DNI	-	-	-
Q2	DNI	DNI	-	-	-
Q8	DNI	DNI	DNI	DNI	DNI
R101	DNI	DNI	DNI	DNI	DNI
R112	DNI	DNI	DNI	DNI	DNI
R140	DNI	DNI	DNI	DNI	DNI
R141	DNI	DNI	DNI	DNI	DNI
R148	DNI	DNI	DNI	-	DNI
R151	DNI	DNI	DNI	DNI	DNI
R162	DNI	DNI	DNI	DNI	DNI
R341	-	DNI	DNI	-	-
R342	-	DNI	DNI	-	-
R49	DNI	DNI	-	-	-
R50	DNI	DNI	-	-	-
R51	DNI	DNI	-	-	-
R52	DNI	DNI	-	-	-
R55	DNI	DNI	DNI	DNI	DNI
R57	DNI	DNI	DNI	DNI	DNI
R58	DNI	DNI	DNI	DNI	DNI
R60	DNI	DNI	-	-	-
R61	DNI	DNI	-	-	-
R65	-	DNI	DNI	-	-
R66	-	DNI	DNI	-	-
R67	DNI	DNI	DNI	DNI	DNI
R73	DNI	DNI	-	-	-
R74	DNI	DNI	-	-	-
R85	DNI	DNI	DNI	DNI	DNI
R95	DNI	DNI	DNI	DNI	DNI
RN4	DNI	DNI	-	-	-
U12	DNI	DNI	-	-	-
U14	DNI	DNI	DNI	DNI	DNI
U17	DNI	DNI	-	-	-
U23	DNI	DNI	DNI	DNI	DNI
U31	DNI	DNI	-	-	-
U72	21-64381-01	DNI	DNI	-	21-64381-01
U8	DNI	DNI	-	-	-
U88	-	DNI	DNI	-	-
Y1	DNI	DNI	-	-	-

ITEM	QTY.	PART NO.	DESCRIPTION	REMARKS/REF.SYMBOL

PARTS LIST

NEXT ASSY	USED ON

THE DWG. AND SPECIFICATION CONTAINED HEREON ARE PROPRIETARY AND MUST NOT BE USED, COPIED, REPRODUCED OR OTHERWISE DEALT WITH NOR ITS CONTENTS COMMUNICATED TO OTHERS EXCEPT IN ACCORDANCE WITH WRITTEN INSTRUCTIONS RECEIVED FROM SYMBOL TECHNOLOGIES INC.

DO NOT SCALE DRAWING

DIMENSIONS ARE IN INCHES
UNLESS OTHERWISE SPECIFIED

	MM	INCH
.XX	±	± .01
.XXX	±	± .005

ANGLES ± 1° FRACTIONS ± 1/64

MATERIAL:

FINISH:

APPROVALS	DATE
DRAWN D. LUNDQUIST	02/18/04
CHECKED	
ENGINEER D. LUNDQUIST	02/18/04
MFG. ENG. P. IASSO	
PRODUCT X.XXXXX	
QUALITY B.WATSON	
TEST ENG. A. PALMER	

SYMBOL TECHNOLOGIES INC.
Bohemia, New York

GEMINI BRICK OPTION II
SCHEMATIC

SIZE D | DWG. NO. 17-64188-01 | REV 4

Thu Feb 19 08:55:50 2004 | SHEET 1 OF 8

DSP COPROCESSOR

REVISIONS							
REV	ZONE	NO.	DESCRIPTION	E.C.	BY	APVD.	DATE
			SEE SHEET 1				

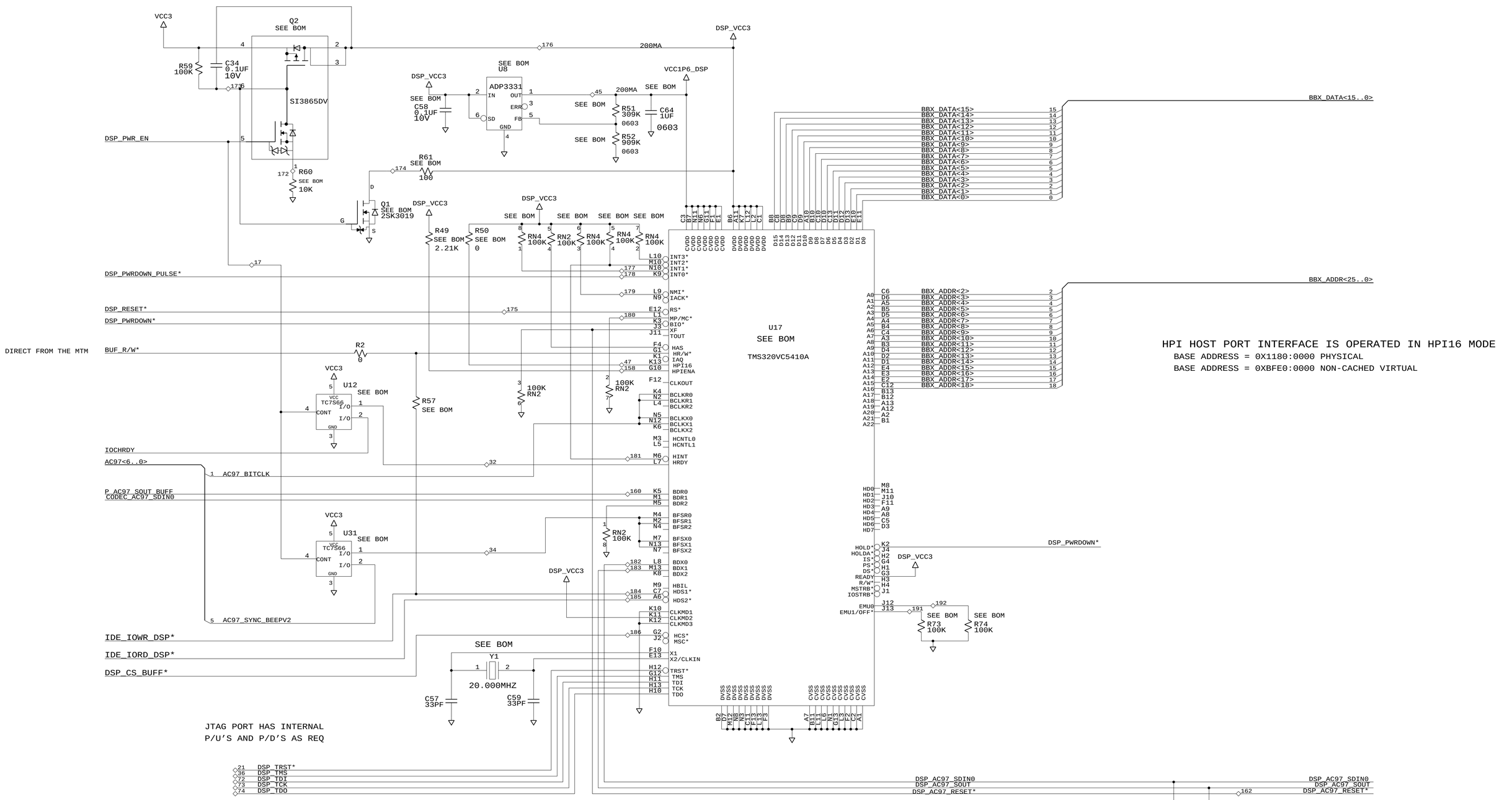

SCHEMATIC ROOMS:
DSP

SYMBOL TECHNOLOGIES INC.
Bohemia, New York

GEMINI BRICK OPTION II
DSP COPROCESSOR

SIZE	DWG. NO.	REV
D	17-64188-01	4

Thu Mar 4 15:38:22 2004 | SHEET 2 OF 8

REVISIONS						
REV	ZONE	NO.	DESCRIPTION	E.C.	BY	APVD.	DATE
			SEE SHEET 1				

SCHEMATIC ROOMS:
AUDIOSHIELD

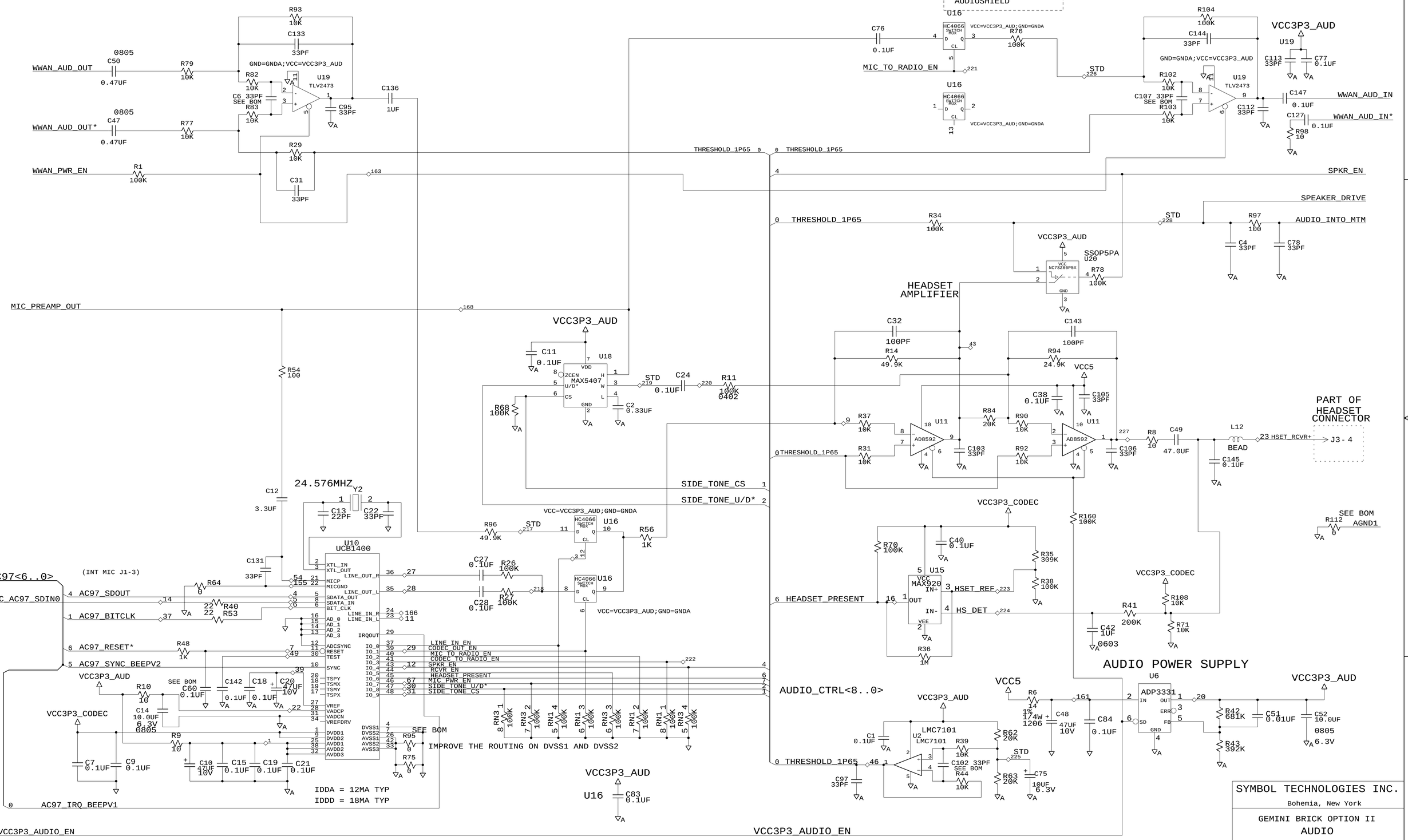

REVISIONS							
REV	ZONE	NO.	DESCRIPTION	E.C.	BY	APVD.	DATE
			SEE SHEET 1				

BRICKHOUSE CPLD & 5V SUPPLY

ADD RC FEED ON COT_RESET_COMB* FROM THE HOST

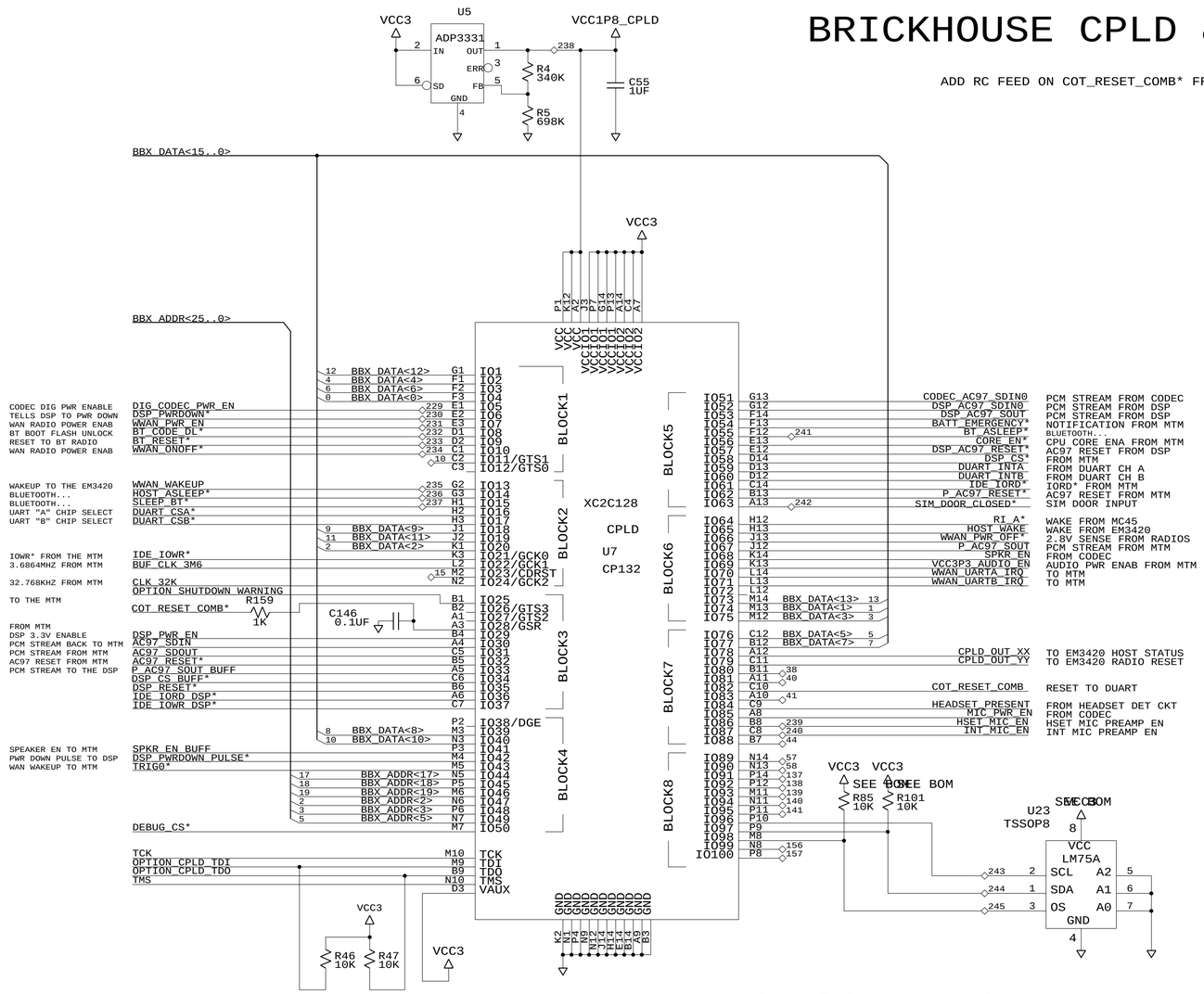

5.0V POWER SUPPLY (1A)

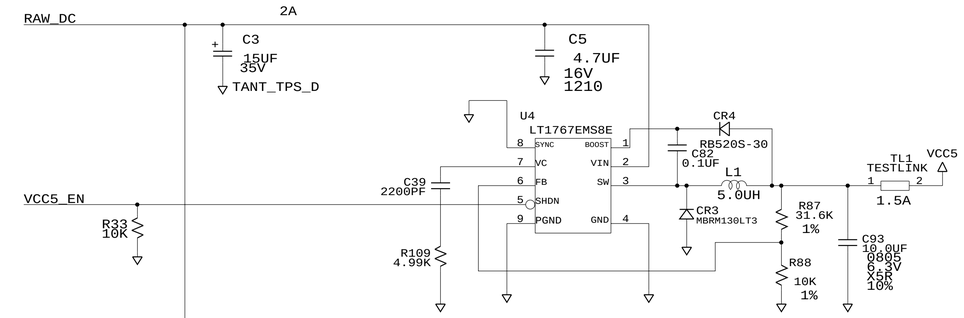

4.1V WAN POWER SUPPLY (1A AVG)

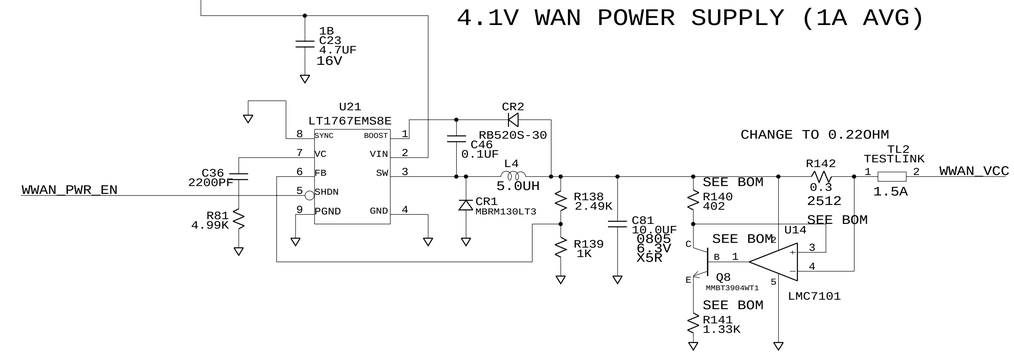

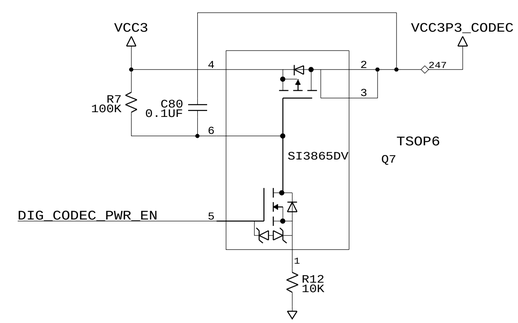

CPLD SIGNAL MAPPING

ADDR = 0X114E0000
(OUTPUTS UNLESS NOTED)

BX_DATA	SIGNAL
0	BT_RESET*
1	BT_CODE_DL*
2	WWAN_PWR_EN
3	SLEEP_BT*
4	DSP_PWR_OVERRIDE
5	AC97_CNTL_SEL
6	DSP_PWRDOWN*
7	WWAN_ONOFF*
8	WWAN WAKEUP*
9	BT_ASLEEP* (IN)
10	HOST_ASLEEP*
11	WWAN_PWR_OFF* (IN)
12	DSP_RESET*
13	DIG_CODEC_PWR_EN

ADDR = 0X114E0004
(ALL INPUTS)

BX_DATA	SIGNAL
0	MINOR_REV_0
1	MINOR_REV_1
2	-- NOT USED --
3	MINOR_REV_2
4	MAJOR_REV_0
5	MAJOR_REV_1
6	MAJOR_REV_2
7	-- NOT USED --
8	-- NOT USED --
9	PART_ID_0
10	PART_ID_1
11	-- NOT USED --
12	PART_ID_2
13	PART_ID_3

ADDR = 0X114E0008
(OUTPUTS UNLESS NOTED)

BX_DATA	SIGNAL
0	WAN_SELECT
1	CPLD_OUT_XX
2	CPLD_OUT_YY
3	-- NOT USED --
4	-- NOT USED --
5	-- NOT USED --
6	-- NOT USED --
7	-- NOT USED --
8	-- NOT USED --
9	-- NOT USED --
10	-- NOT USED --
11	-- NOT USED --
12	-- NOT USED --
13	-- NOT USED --

PART ID = 2 FOR THIS BOARD

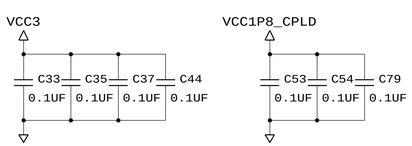

DUART CHANNEL A BASE = 0X114C0000
DUART CHANNEL B BASE = 0X114C0020

LM75A TEMP SENSE MAPPING TBD

SCHEMATIC ROOMS:
CPLD
5VSUPPLY

SYMBOL TECHNOLOGIES INC.
Bohemia, New York

GEMINI BRICK OPTION II
BRICKHOUSE CPLD & 5V SUPPLY

SIZE	DWG. NO.	REV
D	17-64188-01	4

Thu Mar 4 15:38:34 2004 SHEET 4 OF 8

REVISIONS							
REV	ZONE	NO.	DESCRIPTION	E.C.	BY	APVD.	DATE
			SEE SHEET 1				

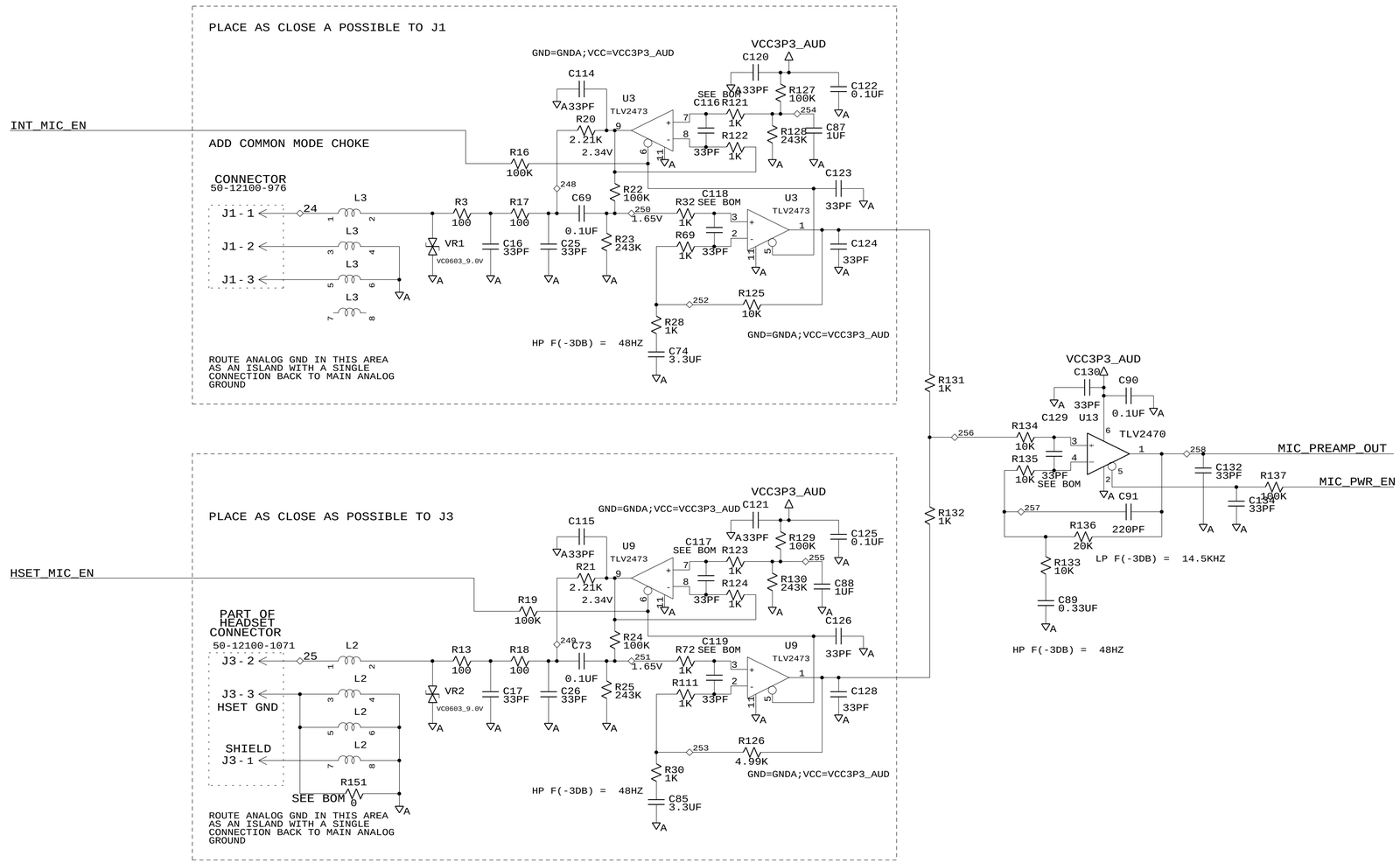

SYMBOL TECHNOLOGIES INC.		
Bohemia, New York		
GEMINI BRICK OPTION II MICROPHONE PREAMPS		
SIZE D	DWG. NO. 17-64188-01	REV 4
Thu Mar 4 15:38:39 2004	SHEET 5 OF 8	

REVISIONS							
REV	ZONE	NO.	DESCRIPTION	E.C.	BY	APVD.	DATE
			SEE SHEET 1				

BLUETOOTH

BLUETOOTH VARIANTS

24-64188-01: SNAPPER
24-64188-02: MARLIN
24-64188-03: MARLIN
24-64188-04: NO BT RADIO
24-64188-05: NO BT RADIO

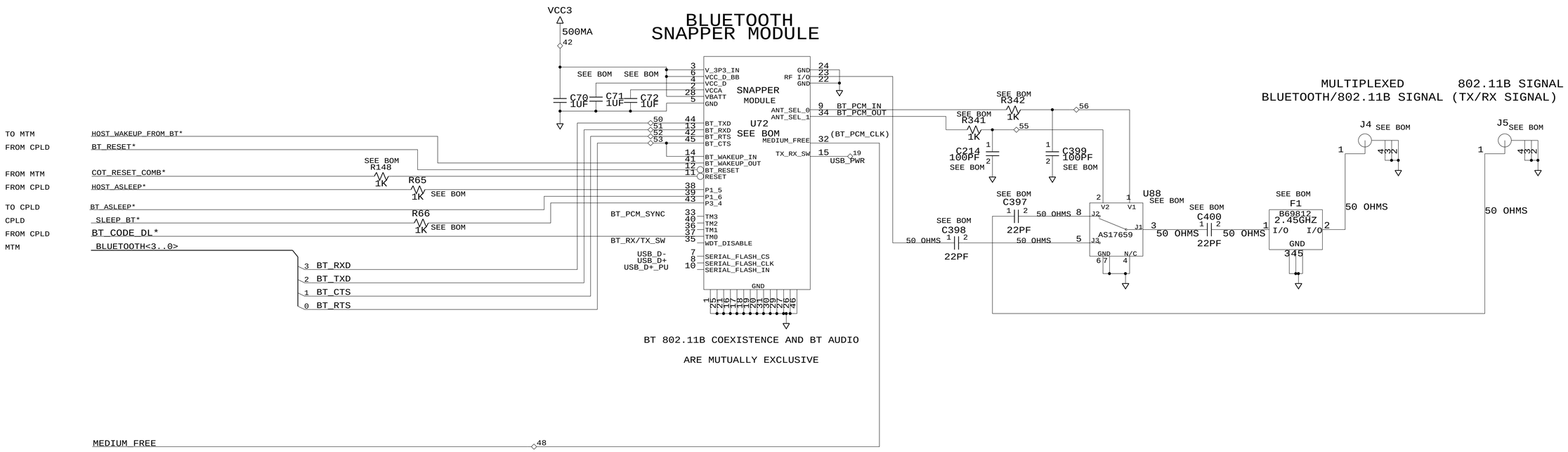

SPEAKER POWER AMP

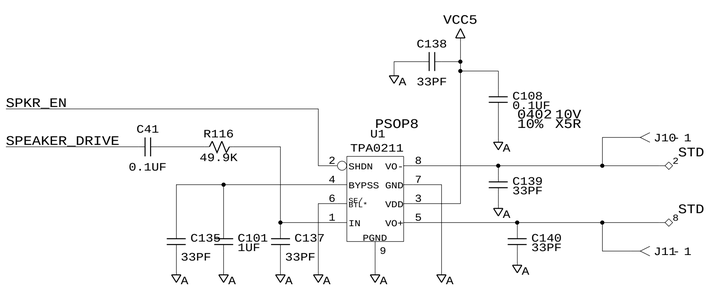

MEDIUM_FREE	ANT_SEL_0 (V2)	ANT_SEL_1 (V1)	J1-J2	J1-J3	ACTIVE RADIO
H	L	H	C	NC	BLUETOOTH
L	H	L	NC	C	802.11
X	L	L	INVALID	INVALID	INVALID
X	H	H	INVALID	INVALID	INVALID

SYMBOL TECHNOLOGIES INC.
Bohemia, New York

GEMINI BRICK OPTION SCHEMATIC
BLUETOOTH

SIZE	DWG. NO.	REV
D	17-64188-01	4

Thu Mar 4 15:38:43 2004 SHEET 6 OF 8

REVISIONS							
REV	ZONE	NO.	DESCRIPTION	E.C.	BY	APVD.	DATE
			SEE SHEET 1				

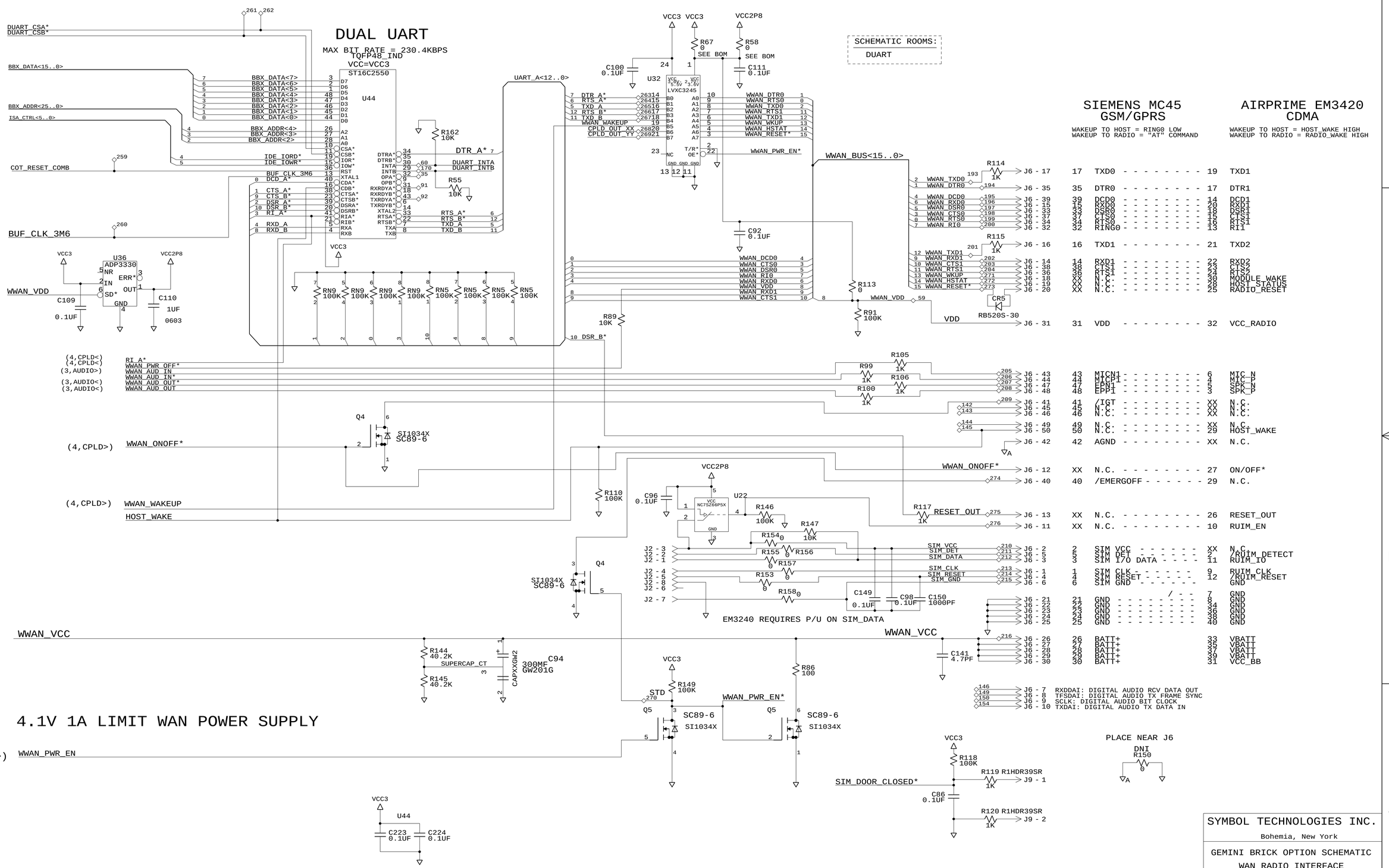

REVISIONS							
REV	ZONE	NO.	DESCRIPTION	E.C.	BY	APVD.	DATE
			SEE SHEET 1				

MTM TO OPTION BOARD INTERFACE

COTULLA SIDE CONNECTOR ON MTM

EXTERNAL COMM PORT

			MTM CONN PIN
U1_UART<7..0>	7 U1_RI	J7-2	1
	6 U1_RXD	J7-14	13
	3 U1_CTS	J7-63	64
	2 U1_TXD	J7-23	24
	0 U1_RTS	J7-61	62
OPTION_RS232_EN	OPTION_RS232_EN	J7-6	5

OPTION CPLD

			MTM CONN PIN
BUF_CLK_3M6		J7-76	75
BATT_EMERGENCY*	159	J7-22	21
CLK_32K	129	J7-8	7
OPTION_CPLD_PRESENT*		J7-59	60
R15 0			

DECODED SCANNER

FF_UART<7..0>	7 FF_RXD	J7-10	9
	6 FF_TXD	J7-36	35
	5 FF_CTS	J7-12	11
	0 FF_RTS	J7-11	12

JTAG

JTAG<6..0>	4 COT_TDI	J7-69	70
	3 COT_TDO	J7-78	77
	2 TCK 65	J7-65	66
	1 TMS 66	J7-80	79
	0 TRST*	J7-68	67
	(CPLD_TDI)	J7-30	29
OPTION_CPLD_TDI	(CPLD_TDO)	J7-70	69
OPTION_CPLD_TDO	68	J7-49	50
	69	J7-57	58

BLUETOOTH

BLUETOOTH<3..0>	3 BT_RXD	J7-13	14
	2 BT_TXD 147	J7-16	15
	1 BT_CTS 61	J7-15	16
	0 BT_RTS 62	J7-18	17
MEDIUM_FREE	MEDIUM_FREE 148	J7-17	18

AC97 & DSP

SPKR_EN_BUFF	SPKR_EN_BUFF	J7-45	46
AC97<6..0>	5 AC97_SYNC_BEEPV2 164	J7-48	47
	1 AC97_BITCLK	J7-38	37
	0 AC97_IRQ_BEEPV1 165	J7-74	73
	2 AC97_SDIN	J7-25	26
P_AC97_SOUT		J7-52	51
P_AC97_RESET*		J7-37	38
CODEC_PRESENT*	167	J7-54	53
R45 0			

DEBUG

DBG/MSR_UART<7..0>	6 DBG_RXD	J7-19	20
	3 DBG_CTS/MSRC1	J7-24	23
	2 DBG_TXD	J7-21	22
	0 DBG_RTS/MSRC2	J7-20	19

PWRM / JTAG / DEBUG

PWRM_TXD	PWRM_TXD	J7-26	25
PWRM_RXD	PWRM_RXD	J7-43	44
JTAG_CRST*	JTAG_CRST*		
COT_RESET*	COT_RESET* 151	J7-28	27
DEBUG_CS*	DEBUG_CS*	J7-27	26
DBG_IRQ	DBG_IRQ	J7-66	65
		J7-29	30

CPLD / WWAN / DSP

VCC3P3_AUDIO_EN	70	J7-56	55
WWAN_UARTB_IRQ		J7-62	61
DSP_CS*	71	J7-72	71
WWAN_UARTA_IRQ		J7-31	32

MISC

COT_RESET_COMB*	COT_RESET_COMB* 152	J7-32	31

VCC3

75	J7-39	40
	J7-41	42
76	J7-1	2
77	J7-3	4
	J7-5	6
	J7-75	76
	J7-77	78
	J7-79	80

DESIGN SPARES

CORE_EN*	CORE_EN*	J7-34	33

POWER

RAW_DC	RAW_DC 63	J7-7	8
		J7-9	10

USER INTERFACE

TRIG<4..0>	0 TRIG0*	J7-67	68
	4 HOST_WAKEUP_FROM_BT* (TRIG4*)	J7-4	3

ISA BUS/ASYNCHRONOUS INTERFACE

ISA_CTRL<5..0>	5 IDE_IOWR*	J7-60	59
	4 IDE_IORD*	J7-42	41
	3 IDE_CSI*	J7-64	63
	2 IDE_CS0*	J7-44	43
	1 IOCHRDY 64	J7-35	36
	0 IDE_IRQ	J7-46	45
OPTION_SHUTDOWN_WARNING		J7-50	49

VCC5

153	J7-71	72	
	J7-73	74	
			J7-33 34
			J7-47 48
			J7-51 52
			J7-40 39
			J7-53 54
			J7-55 56
			J7-58 57

PAD220C120D / PAD203C180D

J20 1	PAD220C120D	
J21 1	PAD203C180D	
J22 1	PAD220C120D	
J23 1	PAD220C120D	
J24 1	PAD220C120D	

ASIC CONNECTOR SIDE ON MTM

PC CARD SLOT B

				MTM CONN PIN
PCM_CTRL_B<14..0>	4 PCMCE1_B*	78	J8-57	58
	3 PCMCE2_B*	79	J8-51	52
	10 PCMRST_B	80	J8-37	38
	8 BVD1_B	81	J8-35	36
	7 BVD2_B	82	J8-31	32
	1 VS1_B*		J8-46	45
	0 VS2_B*		J8-45	46
	9 WAIT_B*	83	J8-44	43
	6 WP_B	84	J8-43	44
	5 RDY_B	85	J8-55	56
	2 CD_B*	86	J8-41	42
	12 VCC3_B	87	J8-52	51
	11 VCC5_B	88	J8-47	48
	13 VPP1_B		J8-49	50
	14 VPP2_B		J8-54	53
CARD_B_DISCONNECT*		89	J8-50	49
PCMCIA_CTRL<9..0>	9 POE*	187	J8-48	47
	8 PWE*	171	J8-39	40
	2 PREG*	188	J8-69	70
	7 PIOR*	189	J8-58	57
	6 PIOW*	190	J8-56	55
OBUFEN_B*	OBUFEN_B*		J8-53	54
VCC5_EN	VCC5_EN	90	J8-33	34
AUDIO_INTO_MTM	AUDIO_INTO_MTM	169	J8-1	2
RAW_DC	RAW_DC		J8-8	7
			J8-10	9
			J8-72	71
			J8-74	73
BUF_R/W*	BUF_R/W*	93	J8-38	37

BBX_ADDR<25..0>

25	BBX_ADDR<25>	94	J8-29	30
24	BBX_ADDR<24>	95	J8-36	35
23	BBX_ADDR<23>	96	J8-34	33
22	BBX_ADDR<22>	97	J8-27	28
21	BBX_ADDR<21>	98	J8-32	31
20	BBX_ADDR<20>	99	J8-30	29
19	BBX_ADDR<19>	100	J8-25	26
18	BBX_ADDR<18>	101	J8-23	24
17	BBX_ADDR<17>	102	J8-26	25
16	BBX_ADDR<16>	103	J8-20	19
15	BBX_ADDR<15>	104	J8-22	21
14	BBX_ADDR<14>	105	J8-24	23
13	BBX_ADDR<13>	106	J8-21	22
12	BBX_ADDR<12>	107	J8-18	20
11	BBX_ADDR<11>	108	J8-19	20
10	BBX_ADDR<10>	109	J8-20	19
9	BBX_ADDR<9>	110	J8-18	17
8	BBX_ADDR<8>	111	J8-17	18
7	BBX_ADDR<7>	112	J8-16	15
6	BBX_ADDR<6>	113	J8-15	16
5	BBX_ADDR<5>	114	J8-13	14
4	BBX_ADDR<4>	115	J8-12	11
3	BBX_ADDR<3>	116	J8-14	13
2	BBX_ADDR<2>	117	J8-11	12
1	BBX_ADDR<1>	118	J8-9	10
0	BBX_ADDR<0>	119	J8-5	6
			J8-7	8

BBX_DATA<15..0>

15	BBX_DATA<15>	120	J8-59	60
14	BBX_DATA<14>	121	J8-61	62
13	BBX_DATA<13>	122	J8-60	59
12	BBX_DATA<12>	123	J8-62	61
11	BBX_DATA<11>	124	J8-63	64
10	BBX_DATA<10>	125	J8-64	63
9	BBX_DATA<9>	126	J8-65	66
8	BBX_DATA<8>	127	J8-66	65
7	BBX_DATA<7>	128	J8-68	67
6	BBX_DATA<6>	130	J8-67	68
5	BBX_DATA<5>	131	J8-71	72
4	BBX_DATA<4>	132	J8-70	69
3	BBX_DATA<3>	133	J8-75	76
2	BBX_DATA<2>	134	J8-73	74
1	BBX_DATA<1>	135	J8-79	80
0	BBX_DATA<0>	136	J8-77	78

VCC3 / AGND1

VCC3	J8-40	39
	J8-42	41
AGND1	J8-2	1
	J8-4	3
	J8-3	4
	J8-6	5
	J8-76	75
	J8-78	77
	J8-80	79

SYMBOL TECHNOLOGIES INC.
Bohemia, New York

GEMINI BRICK OPTION SCHEMATIC
MTM TO OPTION BD INTERFACE

SIZE	DWG. NO.	REV
D	17-64188-01	4

Thu Mar 4 15:38:54 2004 SHEET 8 OF 8

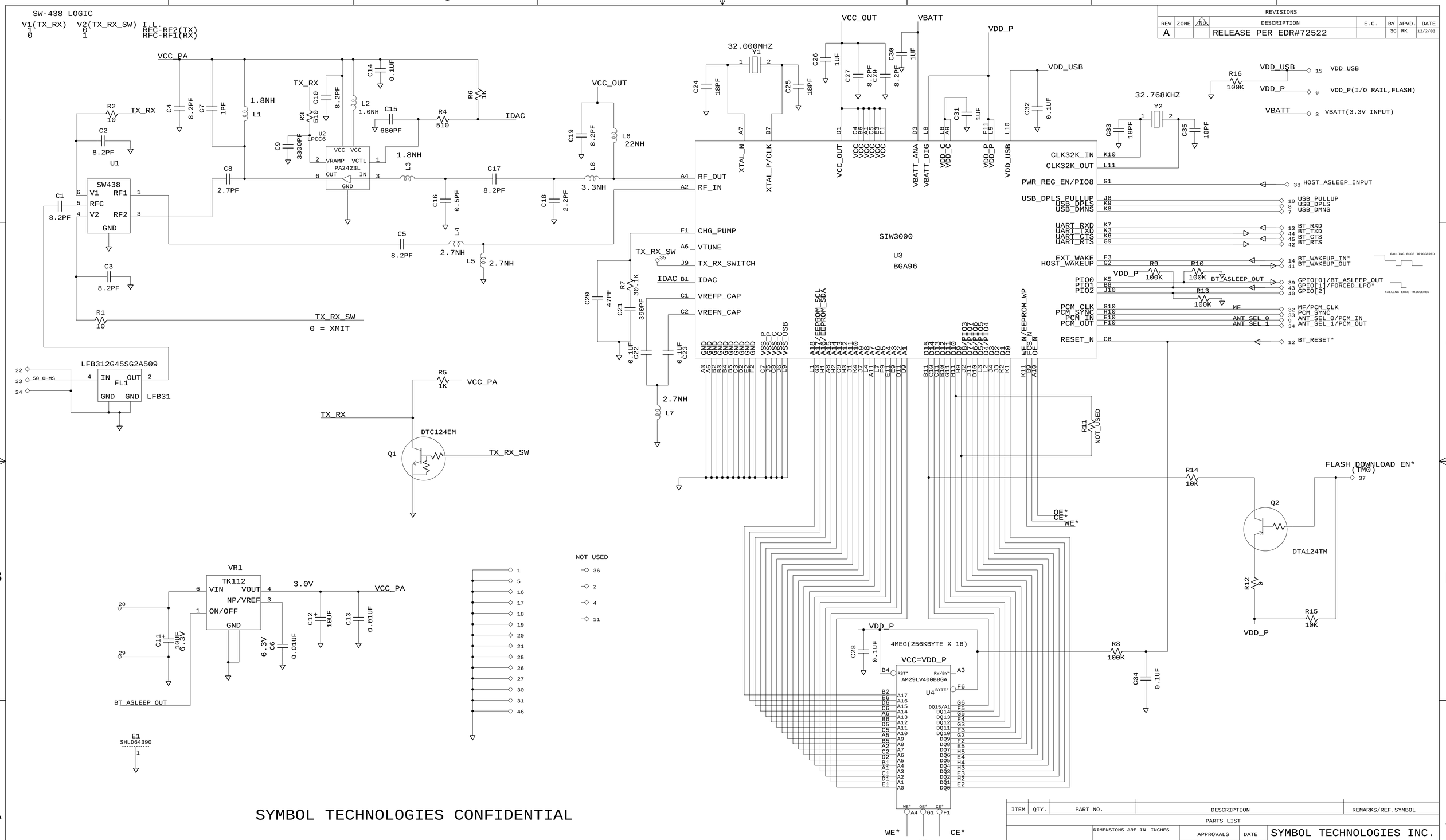

REV	ZONE	NO.	DESCRIPTION	E.C.	BY	APVD.	DATE
A			RELEASE PER EDR#72522		SC	RK	12/2/03

ITEM	QTY.	PART NO.	DESCRIPTION	REMARKS/REF.SYMBOL

PARTS LIST

THE DWG. AND SPECIFICATION CONTAINED HEREON ARE PROPRIETARY AND MUST NOT BE USED, COPIED, REPRODUCED OR OTHERWISE DEALT WITH NOR ITS CONTENTS COMMUNICATED TO OTHERS EXCEPT IN ACCORDANCE WITH WRITTEN INSTRUCTIONS RECEIVED FROM SYMBOL TECHNOLOGIES INC.

DIMENSIONS ARE IN INCHES
UNLESS OTHERWISE SPECIFIED

	MM	INCH
.XX	±	± .01
.XXX	±	± .005

ANGLES ± 1° FRACTIONS ± 1/64

MATERIAL:

FINISH:

APPROVALS	DATE
DRAWN	
CHECKED	
ENGINEER SC	7/03
MFG. ENG.	
PRODUCT	
QUALITY	
TEST ENG.	

SYMBOL TECHNOLOGIES INC.
Bohemia, New York

MARLIN CLASS 1
BLUETOOTH MODULE

SIZE D DWG. NO. 17-64282-01 REV A

Fri Dec 12 09:58:09 2003 SHEET 1 OF 1

NEXT ASSY	USED ON

DO NOT SCALE DRAWING

SYMBOL TECHNOLOGIES CONFIDENTIAL

REVISIONS							
REV	ZONE	NO.	DESCRIPTION	E.C.	BY	APVD.	DATE
A			RELEASE PER EDR # 71714		DD	RK	8/5/2003

GEMINI CPU BOARD TO OPTION BOARD FLEX

THIS SIDE CONNECTS TO J5 (COTULLA SIDE)
ON THE CPU PCB

THIS SIDE CONNECTS TO J8 (ASIC SIDE)
ON THE OPTION PCB

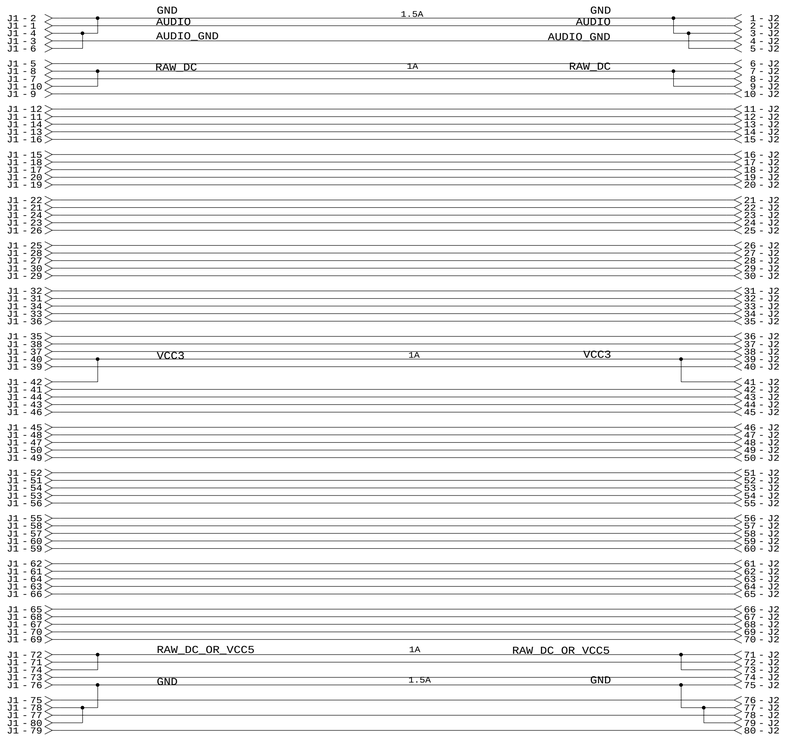

THIS SIDE CONNECTS TO J7 (COTULLA SIDE)
ON THE OPTION PCB

THIS SIDE CONNECTS TO J9 (ASIC SIDE)
ON THE CPU PCB

THIS FLEX WAS DESIGNED SYMMETRICALLY TO ALLOW
USE FOR BOTH 80-PIN OPTION CONNECTORS.
AN S-SHAPE IN THE FLEX FORCES IT TO BE INSTALLED
IN THE PROPER DIRECTION FOR EACH CONNECTOR

J1 ON THIS FLEX ATTACHES TO J5 ON THE CPU PCB
J2 ON THIS FLEX ATTACHES TO J9 ON THE CPU PCB

ITEM	QTY.	PART NO.	DESCRIPTION	REMARKS/REF.SYMBOL

PARTS LIST

NEXT ASSY	USED ON

THE DWG. AND SPECIFICATION CONTAINED HEREON ARE PROPRIETARY AND MUST NOT BE USED, COPIED, REPRODUCED OR OTHERWISE DEALT WITH NOR ITS CONTENTS COMMUNICATED TO OTHERS EXCEPT IN ACCORDANCE WITH WRITTEN INSTRUCTIONS RECEIVED FROM SYMBOL TECHNOLOGIES INC.

DO NOT SCALE DRAWING

DIMENSIONS ARE IN INCHES
UNLESS OTHERWISE SPECIFIED

	MM	INCH
.XX	±	± .01
.XXX	±	± .005

ANGLES ± 1° FRACTIONS ± 1/64

MATERIAL:

FINISH:

APPROVALS		DATE
DRAWN	D DEMEO	03/03
CHECKED		
ENGINEER	D DEMEO	03/03
MFG. ENG.		
PRODUCT		
QUALITY		
TEST ENG.		

SYMBOL TECHNOLOGIES INC.
Bohemia, New York

GEMINI CPU BOARD TO
TO OPTION BOARD FLEX

SIZE D | DWG. NO. 17-59980-01 | REV A

SCALE: NONE | SHEET 1 OF 1

REVISIONS							
REV	ZONE	NO.	DESCRIPTION	E.C.	BY	APVD.	DATE
1			RELEASE PER PPD 76262		CH	RK	07/28/03
2			RELEASE PER PPD 77479		CH	RK	10/15/03

REV2:
1) REMOVED SPLIT PCB ARTWORK THAT FUNCTIONED AS A SWITCH FOR SIM DETECT
2) REMOVED ZERO OHM RESISTOR THAT BYPASSED SPLIT PCB ARTWORK

SIM SOCKET

50-12100-1160

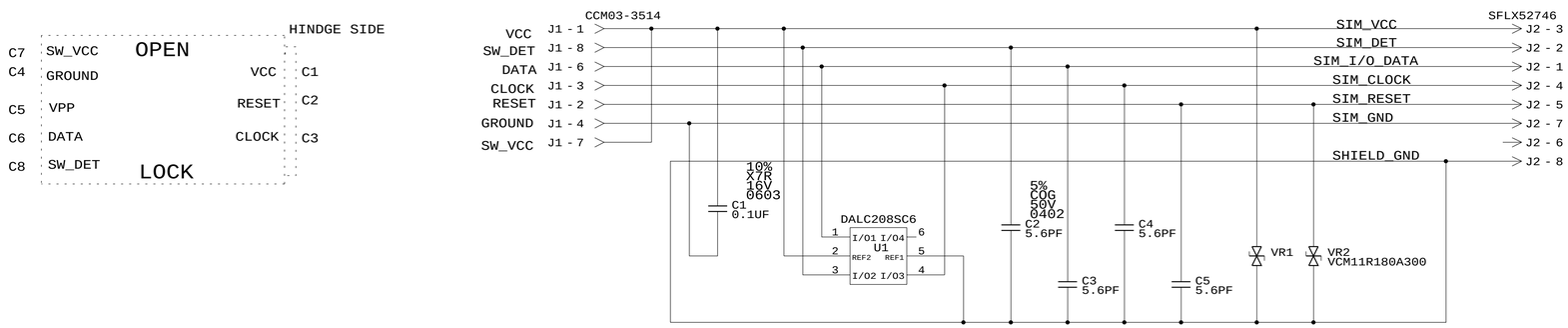

2. BOTTOM SIDE IS GROUNDED COPPER.
3. SIM_CR_CLOCK IS ISOLATED FROM OTHER SIGNALS AND GROUND.

ITEM	QTY.	PART NO.	DESCRIPTION	REMARKS/REF.SYMBOL

PARTS LIST

NEXT ASSY	USED ON

THE DWG. AND SPECIFICATION CONTAINED HEREON ARE PROPRIETARY AND MUST NOT BE USED, COPIED, REPRODUCED OR OTHERWISE DEALT WITH NOR ITS CONTENTS COMMUNICATED TO OTHERS EXCEPT IN ACCORDANCE WITH WRITTEN INSTRUCTIONS RECEIVED FROM SYMBOL TECHNOLOGIES INC.

DO NOT SCALE DRAWING

DIMENSIONS ARE IN INCHES
UNLESS OTHERWISE SPECIFIED

	MM	INCH
.XX	±	± .01
.XXX	±	± .005

ANGLES ± 1° FRACTIONS ± 1/64

MATERIAL:

FINISH:

APPROVALS	DATE
DRAWN C.HEADLEY	07/28/03
CHECKED R. KOTSAY	07/28/03
ENGINEER C. HEADLEY	07/28/03
MFG. ENG.	
PRODUCT	
QUALITY	
TEST ENG.	

SYMBOL TECHNOLOGIES INC.
Bohemia, New York

WWAN SIM CARD FLEX BOARD FLEX DESIGN

SIZE D | DWG. NO. 17-62643-01 | REV 2

Thu Oct 16 09:07:15 2003 | SHEET 1 OF 1

REVISIONS							
REV	ZONE	NO.	DESCRIPTION	E.C.	BY	APVD.	DATE
1			RELEASE PER PPD # 76713		CH	RK	08/18/03

EM3420 RADIO HEADER
50-12100-1153
SAMTEC FTE-120-01-G-DV-ES-PTR

OPTION BOARD HEADER
50-12100-1149
MOLEX 54037-0507

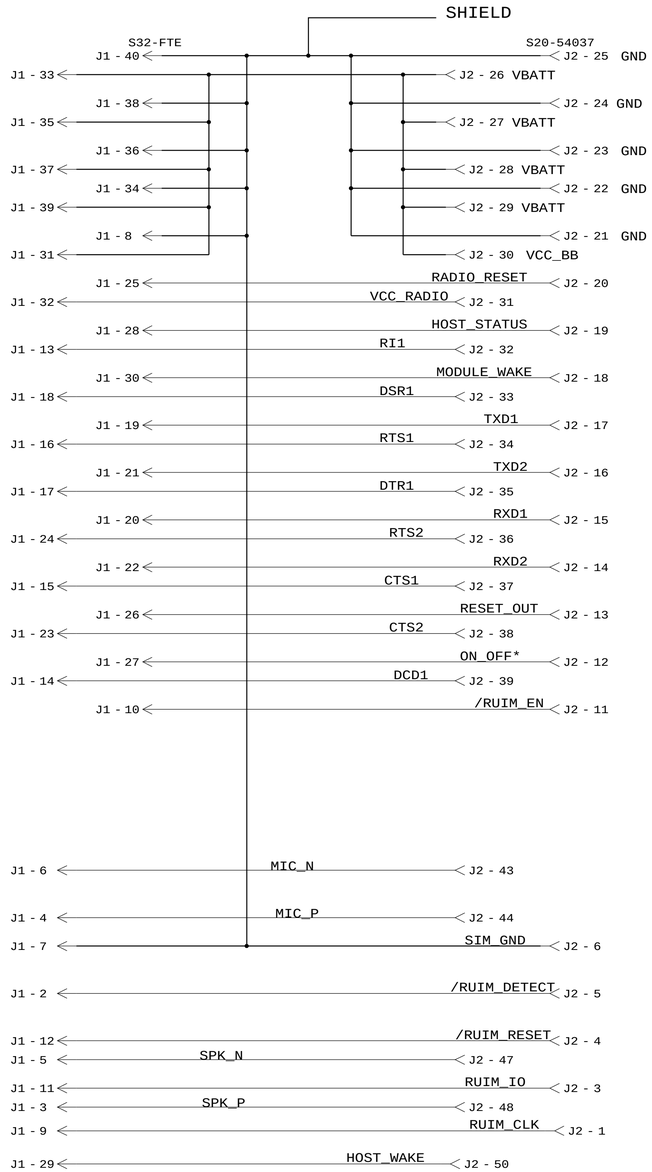

NOTES:

1) SILVER EPOXY SHIELD ON BOTH SIDES
2) INCLUDE STENCIL ON EACH END TO IDENTIFY EITHER RADIO OR OPTION BOARD
3) INCLUDE PIN 1, 25, 26, 50 STENCIL ON J2 AND PIN 1, 2, 39, 40 STENCIL ON J1
4) PROVIDE WIDE GND AND VBATT TRACE - 1.5 AMP
5) KEEP MIC_N AND MIC_P CLOSE TO EACH OTHER
6) PROVIDE GND ISOLATION AROUND RUIM_CLK

ITEM	QTY.	PART NO.	DESCRIPTION	REMARKS/REF.SYMBOL

PARTS LIST

NEXT ASSY	USED ON

THE DWG. AND SPECIFICATION CONTAINED HEREON ARE PROPRIETARY AND MUST NOT BE USED, COPIED, REPRODUCED OR OTHERWISE DEALT WITH NOR ITS CONTENTS COMMUNICATED TO OTHERS EXCEPT IN ACCORDANCE WITH WRITTEN INSTRUCTIONS RECEIVED FROM SYMBOL TECHNOLOGIES INC.

DO NOT SCALE DRAWING

DIMENSIONS ARE IN INCHES
UNLESS OTHERWISE SPECIFIED

	MM	INCH
.XX	±	± .01
.XXX	±	± .005

ANGLES ± 1° FRACTIONS ± 1/64

MATERIAL:

FINISH:

APPROVALS		DATE
DRAWN	G. HEADLEY	08/18/03
CHECKED	R. KOTSAY	08/18/03
ENGINEER	G. HEADLEY	08/18/03
MFG. ENG.		
PRODUCT		
QUALITY		
TEST ENG.		

SYMBOL TECHNOLOGIES INC.
Bohemia, New York

AIRPRIME WAN INTERFACE FLEX

SIZE	DWG. NO.	REV
D	17-64187-01	1

Tue Aug 19 14:14:33 2003 SHEET 1 OF 1

REVISIONS							
REV	ZONE	NO.	DESCRIPTION	E.C.	BY	APVD.	DATE
A			RELEASE PER EDR72498		KJR	R. ROTSAY	12/05/03

GEMINI SHORT KEYFLEX 28-KEY

REFER TO DOCUMENT NUMBER 70-63878-01 FOR KEYBOARD CONFIGURATIONS AND ID'S. FOR EACH NEW KEYBOARD VARIATION, BE SURE TO UPDATE THIS DOCUMENTATION SO THERE ARE NO DUPLICATE KEYBOARD ID'S.

BOM TABLE (DNI=Do Not Install)

Reference Designator	Build 01
CR11	DNI
CR5	DNI
CR6	DNI
CR7	DNI
CR8	DNI
CR9	DNI
J1	DNI
J3	DNI
J5	DNI
J6	DNI
S1	DNI
S10	DNI
S11	DNI
S12	DNI
S17	DNI
S18	DNI
S19	DNI
S2	DNI
S20	DNI
S25	DNI
S26	DNI
S27	DNI
S28	DNI
S3	DNI
S33	DNI
S34	DNI
S35	DNI
S36	DNI
S4	DNI
S41	DNI
S42	DNI
S43	DNI
S44	DNI
S49	DNI
S50	DNI
S51	DNI
S65	DNI
S9	DNI

NEXT ASSY	USED ON

THE DWG. AND SPECIFICATION CONTAINED HEREON ARE PROPRIETARY AND MUST NOT BE USED, COPIED, REPRODUCED OR OTHERWISE DEALT WITH NOR ITS CONTENTS COMMUNICATED TO OTHERS EXCEPT IN ACCORDANCE WITH WRITTEN INSTRUCTIONS RECEIVED FROM SYMBOL TECHNOLOGIES INC.

DO NOT SCALE DRAWING

DIMENSIONS ARE IN INCHES

UNLESS OTHERWISE SPECIFIED

	MM	INCH
.XX	±	± .01
.XXX	±	± .005

ANGLES ± 1° FRACTIONS ± 1/64

MATERIAL:

FINISH:

ITEM	QTY.	PART NO.	DESCRIPTION	REMARKS/REF.SYMBOL

PARTS LIST

APPROVALS		DATE
DRAWN	K. RIVALSI	12/5/03
CHECKED		
ENGINEER	K. RIVALSI	12/5/03
MFG. ENG.	P. IASSO	12/5/03
PRODUCT	G. STILL	12/5/03
QUALITY	B. WATSON	12/5/03
TEST ENG.	D. REED	12/5/03

SYMBOL TECHNOLOGIES INC.

Bohemia, New York

GEMINI SHORT KEYFLEX 28-KEY

SIZE D | DWG. NO. 17-65573-01 | REV A

Wed Jan 7 14:11:10 2004 | SHEET 1 OF 3

KEYFLEX TO MTM INTERFACE

REVISIONS							
REV	ZONE	NO.	DESCRIPTION	E.C.	BY	APVD.	DATE
			SEE SHEET 1				

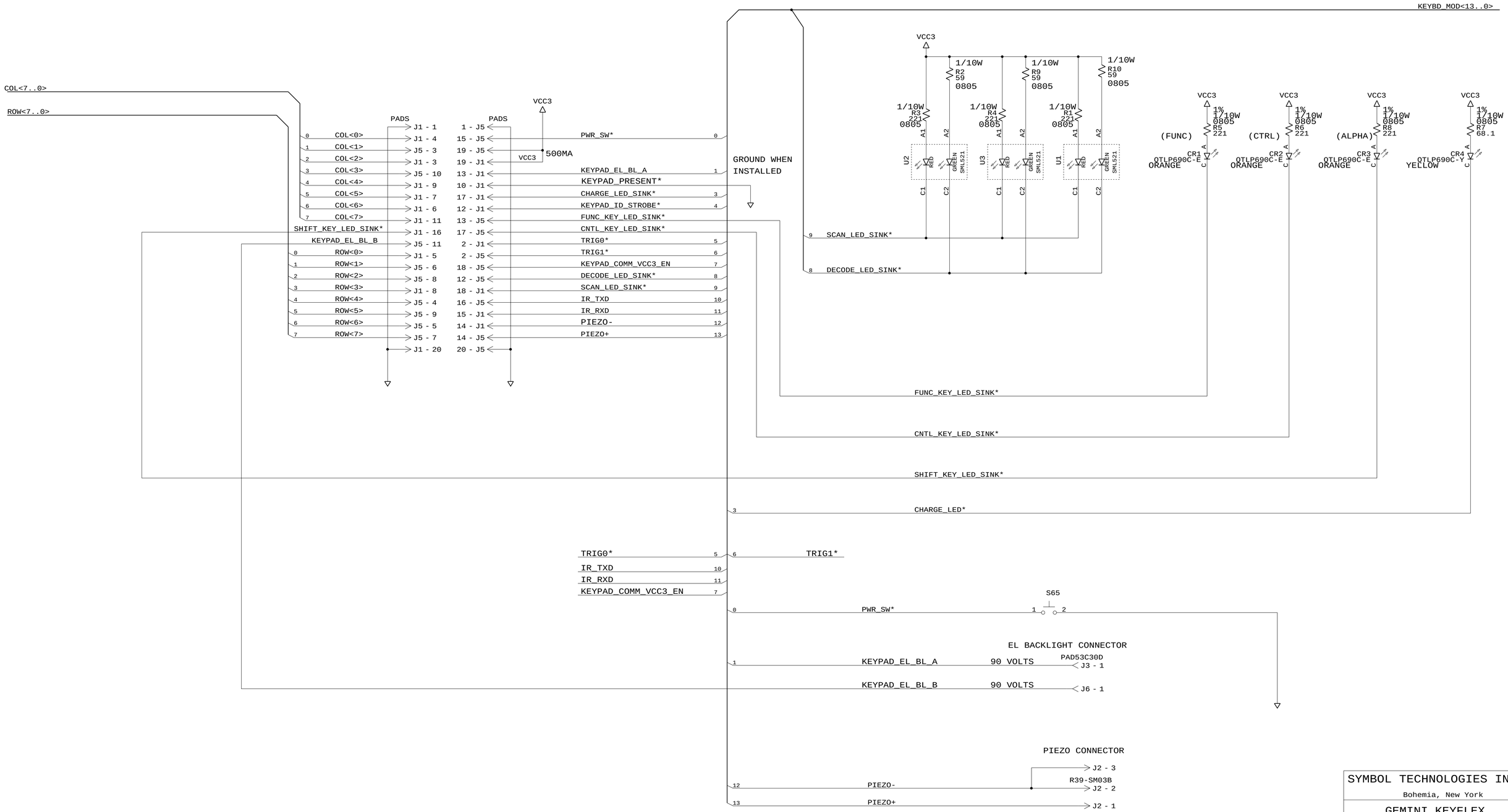

SYMBOL TECHNOLOGIES INC.
Bohemia, New York

GEMINI KEYFLEX
28-KEY

SIZE	DWG. NO.	REV
D	17-65573-01	A

Wed Jan 7 14:11:28 2004 SHEET 2 OF 3

KEYFLEX 7X4 MATRIX
(27 KEYS)

REVISIONS							
REV	ZONE	NO.	DESCRIPTION	E.C.	BY	APVD.	DATE
			SEE SHEET 1				

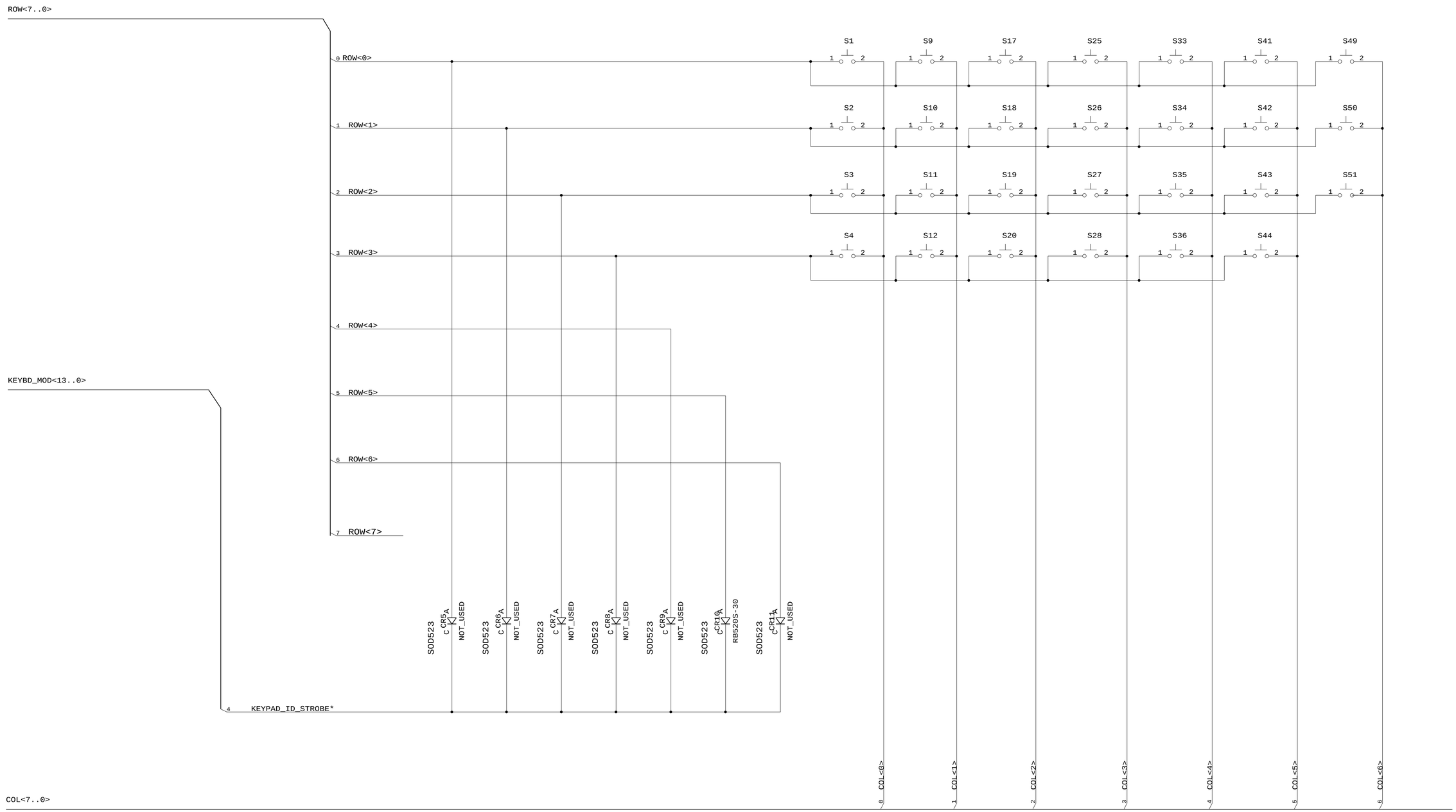

SYMBOL TECHNOLOGIES INC.
Bohemia, New York

GEMINI KEYFLEX
28-KEY

SIZE	DWG. NO.	REV
D	17-65573-01	A

Wed Jan 7 14:11:30 2004 | SHEET 3 OF 3