NOTES: (UNLESS OTHERWISE SPECIFIED)

1. INTERPRET DRAWING IN ACCORDANCE WITH ANSI Y14.5M–1982 DIMENSIONING AND TOLERANCING.

2. MATERIAL AND SUPPLIER TO BE UL AND CSA APPROVED.

3. MATERIAL: LEXAN .010 THICK LAMINATED POLYCARBONATE OR EQUIVALENT.

   FINISH: VELVET

   ADHESIVE: 3M9472, PRESSURE SENSITIVE BACKED .005 THICK WITH PEEL OFF LINER.

   TEXT: WHITE (REVERSE PRINTED) PER OBSERVATION SPECIFICATION S–33294.

   FONT: UNIVERSE 57, 12 pt.

   BACKGROUND: MAPLE BROWN, PER OBSERVATIONAL (BLEED FOUR SIDES) SPECIFICATION S–30441.

4. ALL CORNERS TO HAVE A RADIUS OF .030".

5. TO REPRODUCE THE NORTEL LOGO, ALWAYS USE THE OFFICIAL REPRODUCTION ARTWORK AND/OR ELECTRONIC FORMAT (DISK) PROVIDED BY SPECTRIAN.

6. CSA LABEL MANUFACTURER'S DESIGNATION (UNIVERSE 57, 6pt).

7. FONTS SHOWN ON THIS DRAWING ARE FOR DESCRIPTIVE PURPOSES ONLY, AND ARE NOT TO BE CONSTRUED AS THE ACTUAL FONT REQUIRED IN NOTE 3

REVISIONS				
ZONE	REV.	DESCRIPTION	DATE	APPROVED
	1	ENG RELEASE		

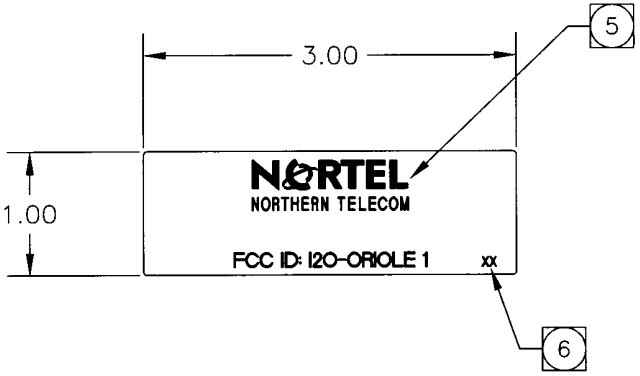

NORTEL
NORTHERN TELECOM

FCC ID: I2O-ORIOLE 1 XX

SCALE: 2/1

FOR DOCUMENT CONTROL USE ONLY		
FOR CAD FILE(S) REFERENCE:	REV.	INITIAL
DISKETTE No.:		
DRAWING FILE NAME:		
DATE UPDATED:	BY:	
FOR ARTWORK REFERENCE:		
P.C. ARTMASTER		
PASTE STENCIL		
SILKSCREEN		

NEXT ASSY	USED ON
APPLICATION	

UNLESS OTHERWISE SPECIFIED DIMENSIONS ARE IN INCHES TOLERANCES ARE: 63√
FRACTIONS ± 1/64 DECIMALS .XX± .01 .XXX± .005 ANGLES ± .5 DEG
MATERIAL 3
FINISH
DO NOT SCALE DRAWING

CONTRACT NO.

APPROVALS	DATE
DWN. BY D.COFFELT	10/1/98
CHK. BY	
ENG. C.MAPAGAY	10/1/98
Q.A.	
MFG.	

SPECTRIAN 500 Ellis Street, Mountain View, CA 94043

LABEL, REGULATORY
ORIOLE

SIZE	CAGE NO.	DWG. NO.	REV.
B	64054	SK–9192	1
SCALE 1/1		SHEET 1 OF 1	