ISSUE	CHANGE DETAIL	DATE	CHECKED	APP.

49.860MHZ VERSION

SONIX / EMC
IC-1
COB (DICE)

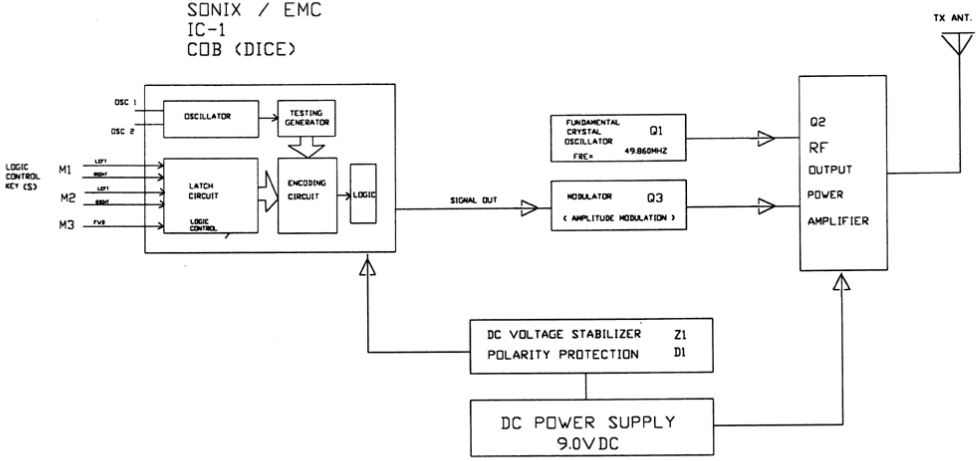

49.860MHZ VERSION

DO NOT SCALE DRAWING	TITLE BLOCK DIAGRAM		Q'TY	UNIT
UNLESS OTHERWISE SPECIFIC DEC ±0.1 ANGLE ±1°	MATERIAL VERSION ; 49.860 MHZ. TX SIDE		FINISH (TX SECTION)	SCALE
GENERAL DRAFT	MODEL RC AIR SURFER		PART NO. 412-341T01-490A	
UNLESS OTHERWISE SPECIFIC WALL THICKNESS	DRAWN BLEE 12/2/03.	CHECKED	APPROVED J.LAM 12/2/2003.	SIZE A4

Dynamic industries co. ltd.